Antenna Describe

1. Antenna Describe:

Antenna Plate	IFA
Antenna Gain	-0.47 dBi
Frequency Range	2402 - 2480 MHz
Connector Type	PCB
Model Name	FS-BT-XX
Company Name	FitShow (Xiamen) Information Technology Co., Ltd

2. External View Drawing:

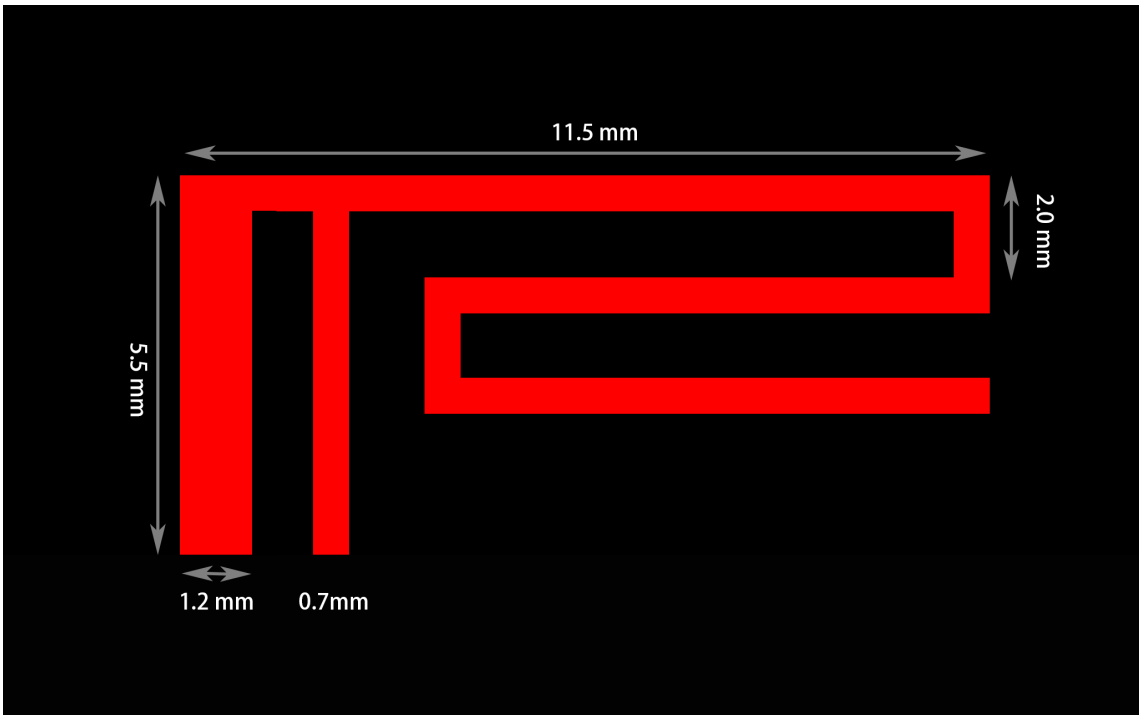

Picture of Antenna

3.Test Data

Frequency	2.4GHz	2.41GHz	2.42GHz	2.43GHz	2.44GHz	2.45GHz	2.46GHz	2.47GHz	2.48GHz	2.485GHz
	Horizontal ()									
H Peak EIRP (dBi)	-0.47	-1.23	-2.1	-2.23	-2.18	-2.17	-1.96	-2.5	-3.35	-4.05
H Directivity (dBi)	4.45	4.28	4.08	3.89	3.87	3.97	4.12	4.23	4.23	4.18
H Efficiency (dB)	-4.92	-5.51	-6.18	-6.12	-6.05	-6.14	-6.08	-6.73	-7.58	-8.23
H Efficiency (%)	32.21	28.12	24.1	24.43	24.83	24.32	24.66	21.23	17.46	15.03
H Gain (dBi)	-0.47	-1.23	-2.1	-2.23	-2.18	-2.17	-1.96	-2.5	-3.35	-4.05
Maximum H Value (dBi)	-0.47	-1.23	-2.1	-2.23	-2.18	-2.17	-1.96	-2.5	-3.35	-4.05
Minimum H Value (dBi)	-32.5	-38.32	-39.99	-45.96	-42.99	-39.14	-36.62	-33.55	-32.89	-34.78
	Vertical ()									
V Peak EIRP (dBi)	-7.95	-8.31	-9.05	-9.17	-8.59	-8.09	-7.56	-7.73	-8.09	-8.6
V Directivity (dBi)	5.07	5.2	5.02	4.75	4.95	5.15	5.16	5.17	5.29	5.33
V Efficiency (dB)	-13.02	-13.51	-14.07	-13.92	-13.54	-13.24	-12.72	-12.9	-13.38	-13.93
V Efficiency (%)	4.99	4.46	3.92	4.06	4.43	4.74	5.35	5.13	4.59	4.05
V Gain (dBi)	-7.95	-8.31	-9.05	-9.17	-8.59	-8.09	-7.56	-7.73	-8.09	-8.6
Maximum V Value (dBi)	-7.95	-8.31	-9.05	-9.17	-8.59	-8.09	-7.56	-7.73	-8.09	-8.6
Minimum V Value (dBi)	-42.86	-40.86	-37.04	-41.11	-44.37	-38.86	-44.8	-44.22	-39.58	-39.93

4、Test Pattern

2.4GHzUp View

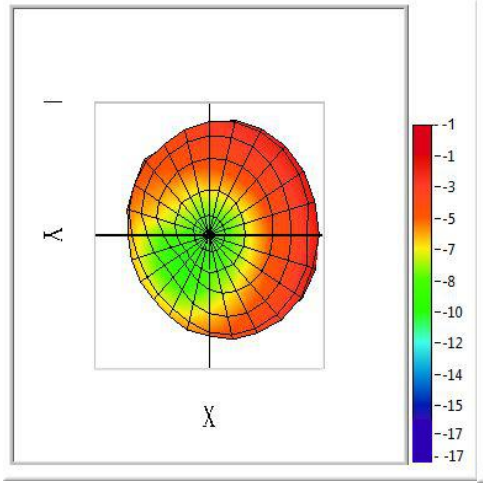

2.4GHzDown View

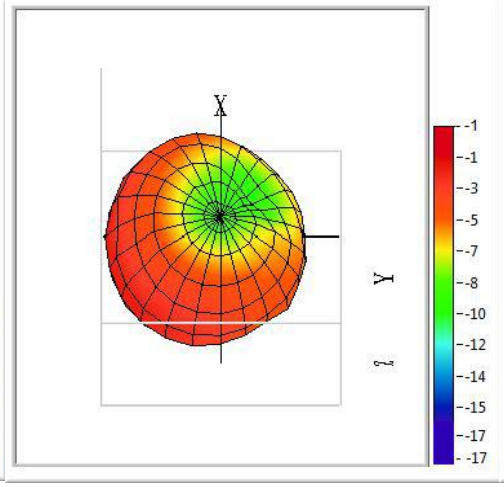

2.4GHzFront View

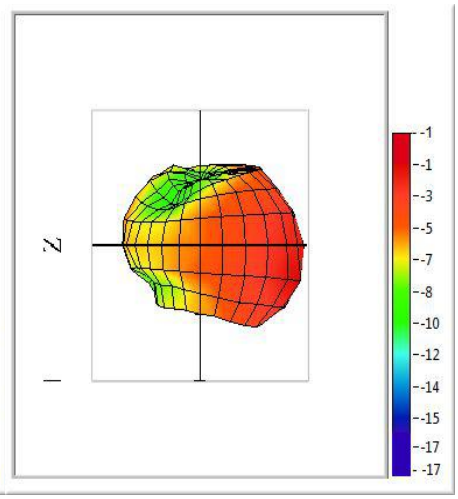

2.45GHzUp

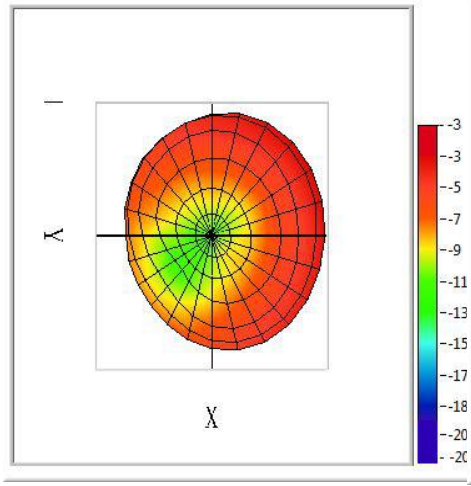

2.45GHzDow

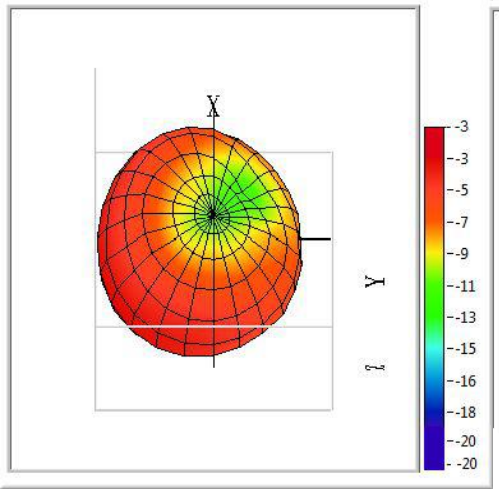

2.45GHzFro

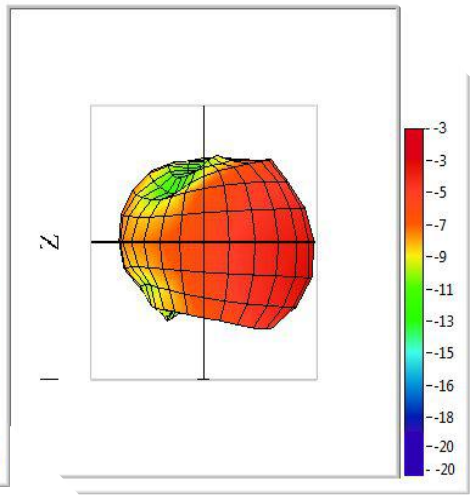

2.485GHzUp

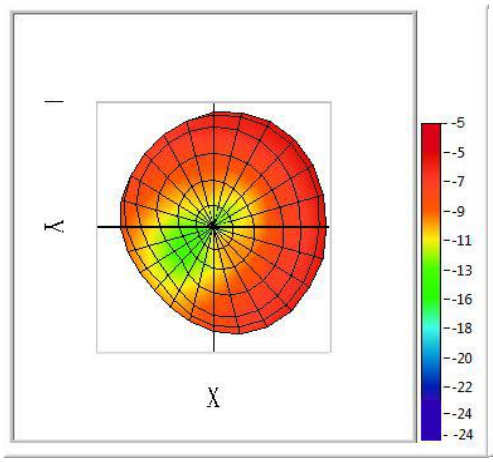

2.485GHzDo

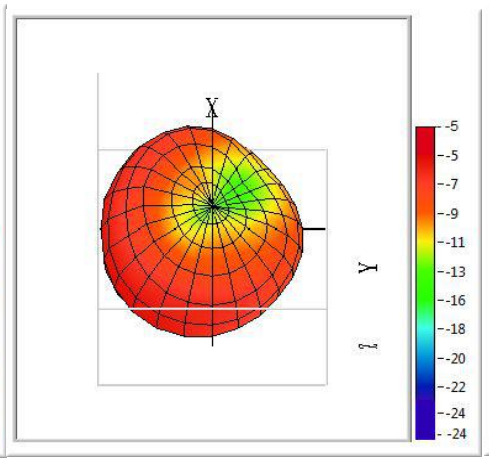

2.485GHzFr

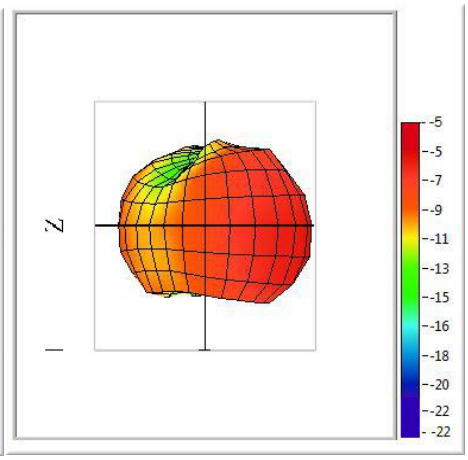

2.4GHz@Theta 0.0

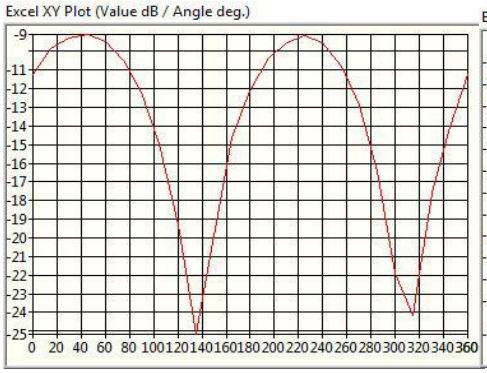

2.4GHz@Theta 0.0

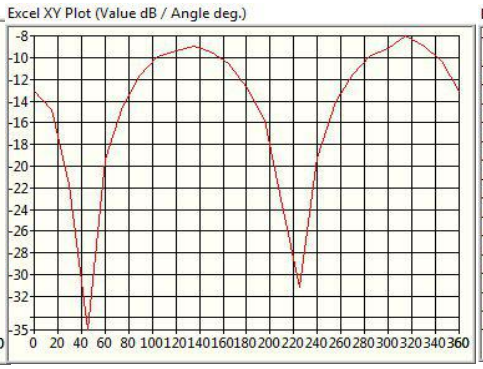

2.4GHz@Theta 0.0

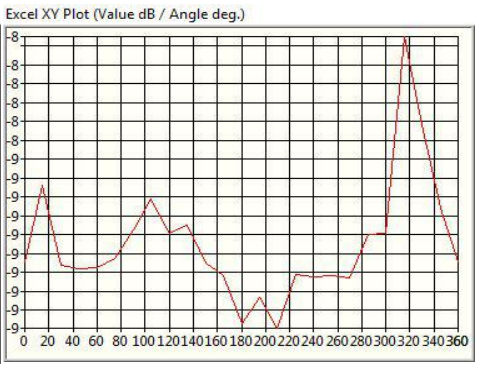

2.45GHz@Theta 0.0
Horizontal

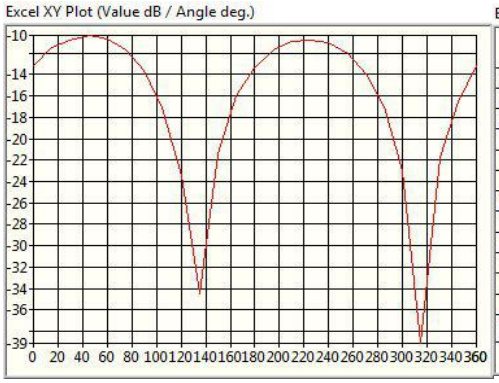

2.45GHz@Theta 0.0
Vertical

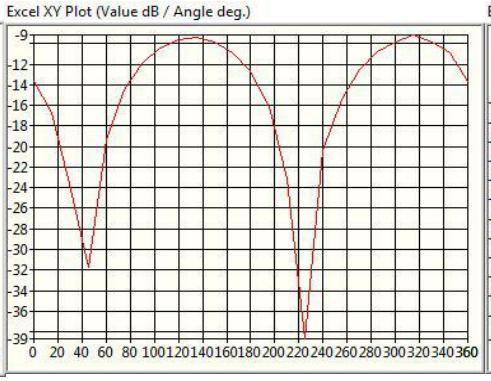

2.45GHz@Theta 0.0
Total

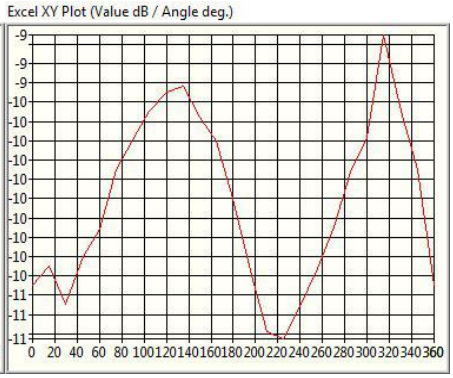

2.485GHz@Theta 0.0
Horizontal

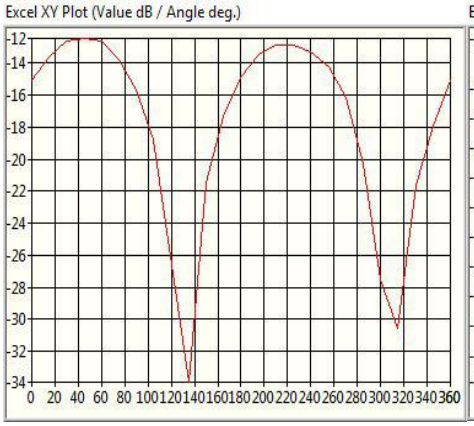

2.485GHz@Theta 0.0
Vertical

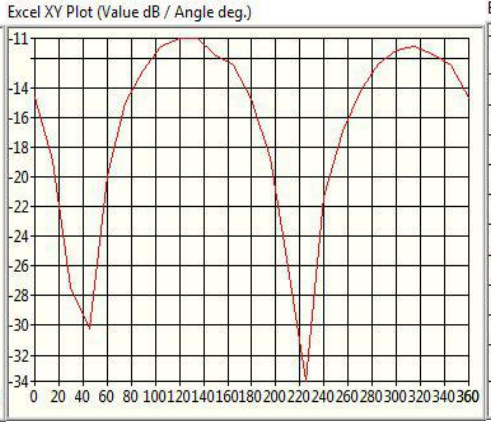

2.485GHz@Theta 0.0
Total

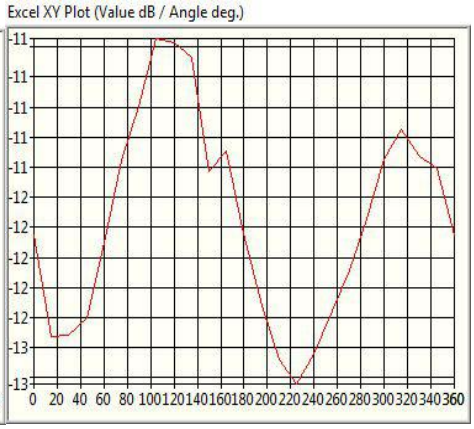

2.4GHz@Theta 0.0
Horizontal

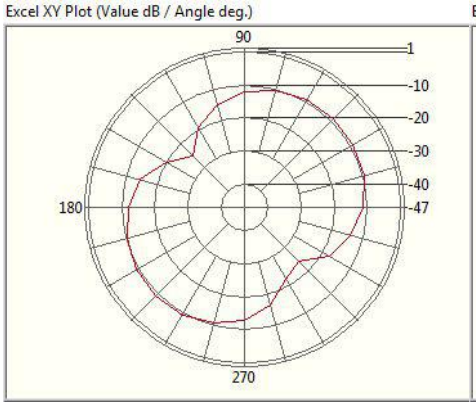

2.4GHz@Theta 0.0
Vertical

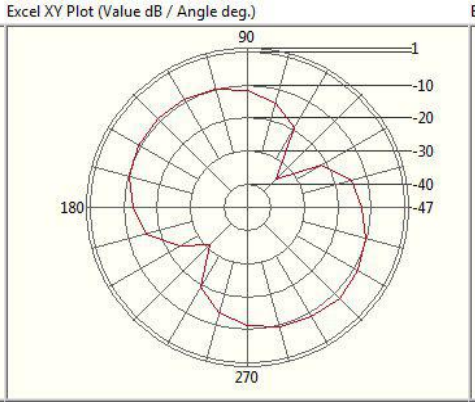

2.4GHz@Theta 0.0
Total

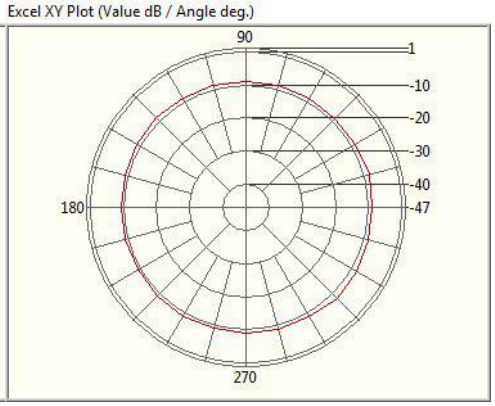

2.45GHz@Theta 0.0
Horizontal

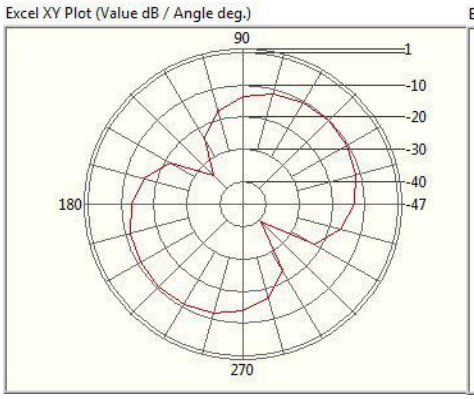

2.45GHz@Theta 0.0
Vertical

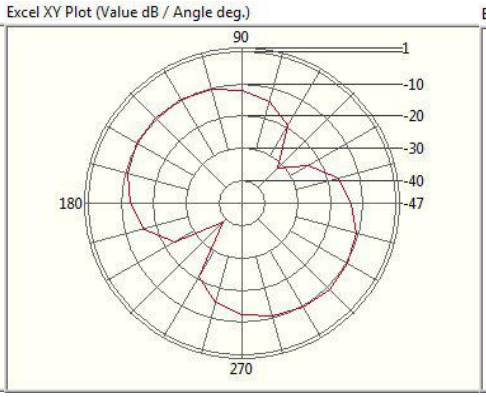

2.45GHz@Theta 0.0
Total

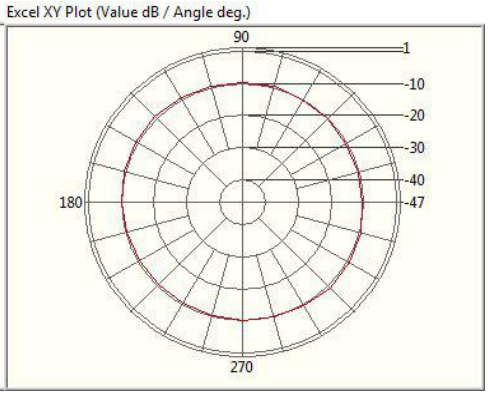

2.485GHz@Theta 0.0
Horizontal

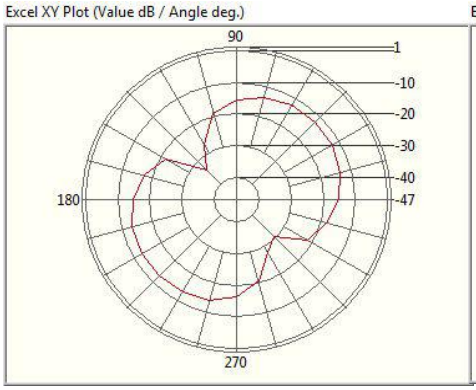

2.485GHz@Theta 0.0
Vertical

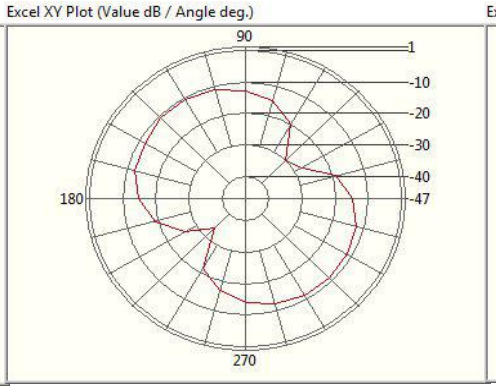
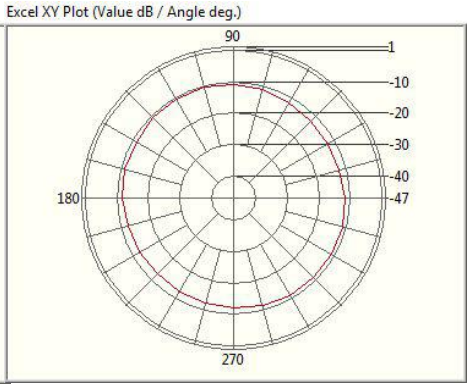
2.485GHz@Theta 0.0
Total