Antenna Test Report

Report No.: AGC16953250401PA01

PRODUCT DESIGNATION	:	PCB Antenna
BRAND NAME	:	LANSIIN
MODEL NAME	:	BS07
APPLICANT	:	SHENZHEN MEILLEURE TECHNOLOGY CO., LTD
DATE OF ISSUE	:	May 09, 2025
REPORT VERSION	:	V1.0

Attestation of Global Compliance (Shenzhen) Co., Ltd

Any report having not been signed by authorized approver, or having been altered without authorization, or having not been stamped by the "Dedicated Testing/Inspection Stamp" is deemed to be invalid. Copying or excerpting portion of, or altering the content of the report is not permitted without the written authorization of AGC. The test results presented in the report apply only to the tested sample. Any objections to report issued by AGC should be submitted to AGC within 15days after the issuance of the test report. Further enquiry of validity or verification of the test report should be addressed to AGC by agc01@agccert.com.

Attestation of Global Compliance(Shenzhen)Co., Ltd
Attestation of Global Compliance(Shenzhen)Std & Tech Co., Ltd
Tel: +86-755 2523 4088 E-mail: agc@agccert.com Web: http://www.agccert.com/

Report Revise Record

Report Version	Revise Time	Issued Date	Valid Version	Notes
V1.0	/	May 09, 2025	Valid	Initial release

Any report having not been signed by authorized approver, or having been altered without authorization, or having not been stamped by the "Dedicated Testing/Inspection Stamp" is deemed to be invalid. Copying or excerpting portion of, or altering the content of the report is not permitted without the written authorization of AGC. The test results presented in the report apply only to the tested sample. Any objections to report issued by AGC should be submitted to AGC within 15days after the issuance of the test report. Further enquiry of validity or verification of the test report should be addressed to AGC by agc01@agccert.com.

TABLE OF CONTENTS

1. PRODUCT INFORMATON 4

2. TEST FACILITY 5

3. TEST EQUIPMENT LIST 5

4. MEASUREMENT UNCERTAINTY 5

5. TEST SUMMARY LIST 5

6. TEST SETUP 6

7. TEST RESULTS 7

7.1. VSWR 7
7.2. GAIN AND EFFICIENCY 8
7.3. RADIATION PATTERN 9

APPENDIX A: PHOTOGRAPHS OF TEST SETUP 11

APPENDIX B: PHOTOGRAPHS OF EUT 12

Any report having not been signed by authorized approver, or having been altered without authorization, or having not been stamped by the "Dedicated Testing/Inspection Stamp" is deemed to be invalid. Copying or excerpting portion of, or altering the content of the report is not permitted without the written authorization of AGC. The test results presented in the report apply only to the tested sample. Any objections to report issued by AGC should be submitted to AGC within 15days after the issuance of the test report. Further enquiry of validity or verification of the test report should be addressed to AGC by agc01@agccert.com.

1. PRODUCT INFORMATON

General information	
Applicant	SHENZHEN MEILLEURE TECHNOLOGY CO., LTD
Address	shajing xinqiao gangzai gongyeyuan A7, Baoan Street, Shenzhen, China
Manufacturer	SHENZHEN MEILLEURE TECHNOLOGY CO., LTD
Address	shajing xinqiao gangzai gongyeyuan A7, Baoan Street, Shenzhen, China
Factory	SHENZHEN MEILLEURE TECHNOLOGY CO., LTD
Address	shajing xinqiao gangzai gongyeyuan A7, Baoan Street, Shenzhen, China
Product Designation	PCB Antenna
Brand Name	LANSIIN
Test Model	BS07
Series Model	N/A
Difference Description	N/A
Date of test	Apr. 21, 2025
Report Template	AGCRT-ER-PA/V1.0
Technical information	
Frequency Range	2400-2500MHz
Test Frequencies	2400MHz, 2410MHz, 2420MHz, 2430MHz, 2440MHz, 2450MHz, 2460MHz, 2470MHz, 2480MHz, 2490MHz, 2500MHz
Antenna Type	PCB antenna
Dimensions	5.5*14.0mm
Impedance	50 Ω
Maximum test values	Gain: -2.613dBi; Efficiency: 15.888%; VSWR: 1.074U

The above equipment was tested by Attestation of Global Compliance (Shenzhen) Co., Ltd.
The test results of this report relate only to the tested sample identified in this report.

Prepared By	Cici Li (Project Engineer)	May 09, 2025
Reviewed By	Bibo Zhang (Reviewer)	May 09, 2025
Approved By	Angela Li (Authorized Officer)	May 09, 2025

Any report having not been signed by authorized approver, or having been altered without authorization, or having not been stamped by the "Dedicated Testing/Inspection Stamp" is deemed to be invalid. Copying or excerpting portion of, or altering the content of the report is not permitted without the written authorization of AGC. The test results presented in the report apply only to the tested sample. Any objections to report issued by AGC should be submitted to AGC within 15days after the issuance of the test report. Further enquiry of validity or verification of the test report should be addressed to AGC by agc01@agccert.com.

2. TEST FACILITY

Test Site	Attestation of Global Compliance (Shenzhen) Co., Ltd
Location	1-2/F, Building 19, Junfeng Industrial Park, Chongqing Road, Heping Community, Fuhai Street, Bao'an District, Shenzhen, Guangdong, China

3. TEST EQUIPMENT LIST

Equipment	Manufacturer	Model	Cal. Date	Cal. Due
ANTENNA MEASUREMENT SYSTEM	ETS-Lindgren	AMS-8600	Nov. 19, 2024	Nov. 18, 2025
Network Analyzer	R&S	ZVL-6	Oct. 02, 2024	Oct. 01, 2025
Test software	ETS-Lindgren	EMQuest (Ver V1.12)	N/A	N/A

4. MEASUREMENT UNCERTAINTY

The uncertainty is calculated using the methods suggested in the “Guide to the Expression of Uncertainty in measurement” (GUM) published by CISPR and ANSI.

- Uncertainty of VSWR, Uc = ±1.5dB
- Uncertainty of Gain, Uc = ±0.8dB

5. TEST SUMMARY LIST

NO.	Test item	Remark
1	VSWR	--
2	Gain and efficiency	--
3	Radiation pattern	--

Any report having not been signed by authorized approver, or having been altered without authorization, or having not been stamped by the “Dedicated Testing/Inspection Stamp” is deemed to be invalid. Copying or excerpting portion of, or altering the content of the report is not permitted without the written authorization of AGC. The test results presented in the report apply only to the tested sample. Any objections to report issued by AGC should be submitted to AGC within 15days after the issuance of the test report. Further enquiry of validity or verification of the test report should be addressed to AGC by agc01@agccert.com.

6. TEST SETUP

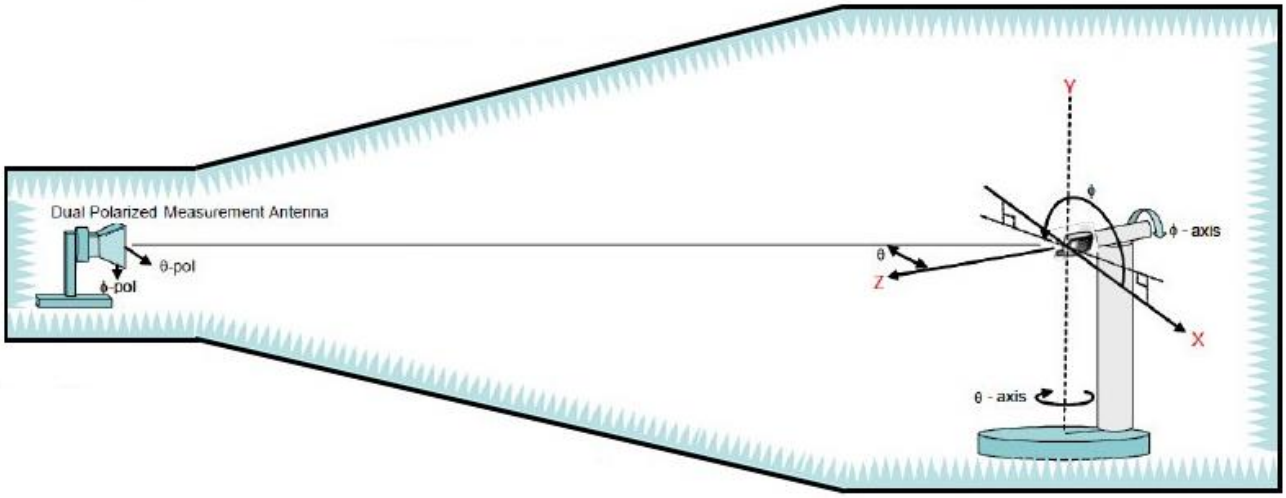

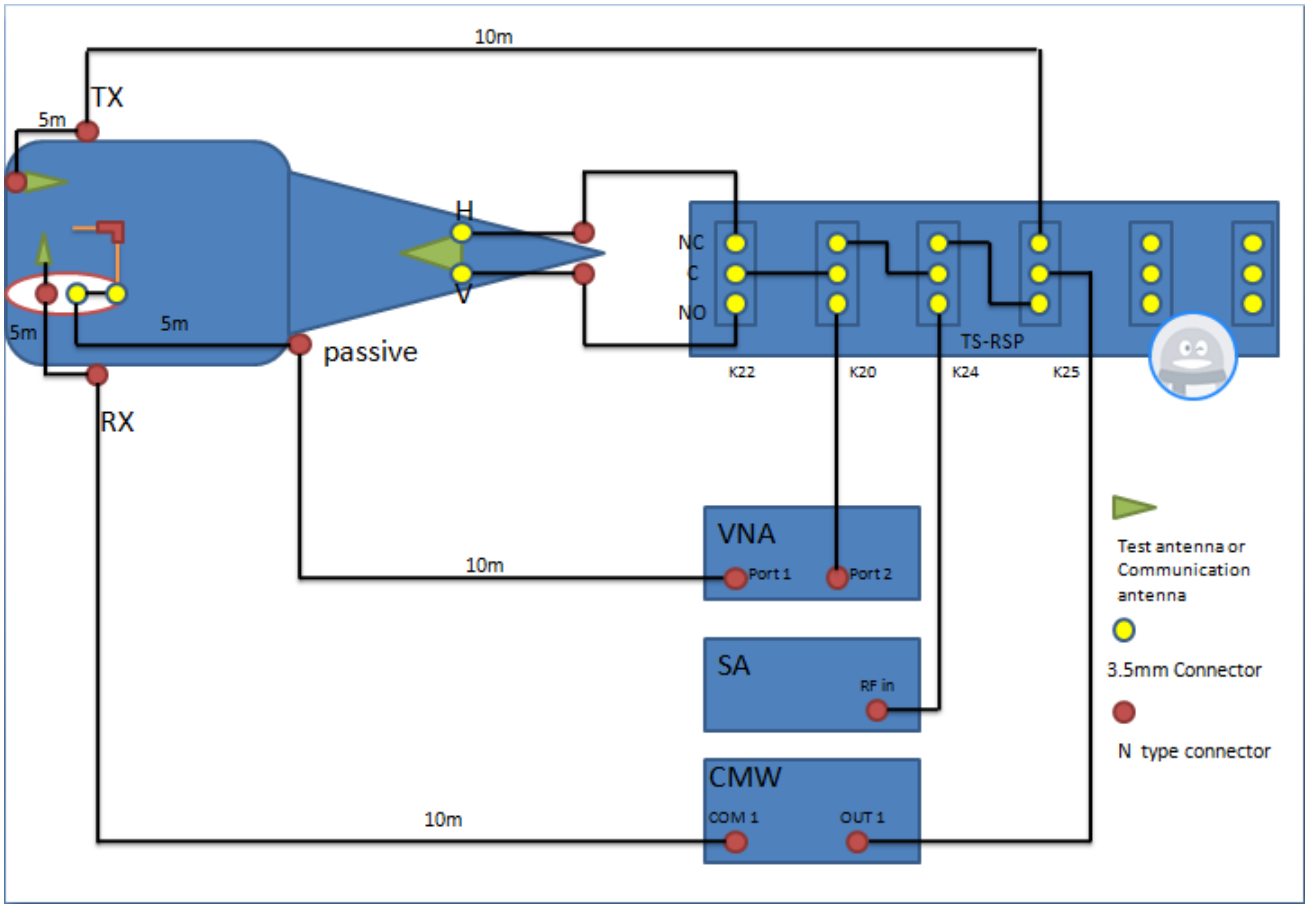

Any report having not been signed by authorized approver, or having been altered without authorization, or having not been stamped by the "Dedicated Testing/Inspection Stamp" is deemed to be invalid. Copying or excerpting portion of, or altering the content of the report is not permitted without the written authorization of AGC. The test results presented in the report apply only to the tested sample. Any objections to report issued by AGC should be submitted to AGC within 15days after the issuance of the test report. Further enquiry of validity or verification of the test report should be addressed to AGC by agc01@agccert.com.

7. TEST RESULTS

7.1. VSWR

Frequency(MHz)	VSWR
2402	1.066
2450	1.052
2480	1.070
2420	1.074

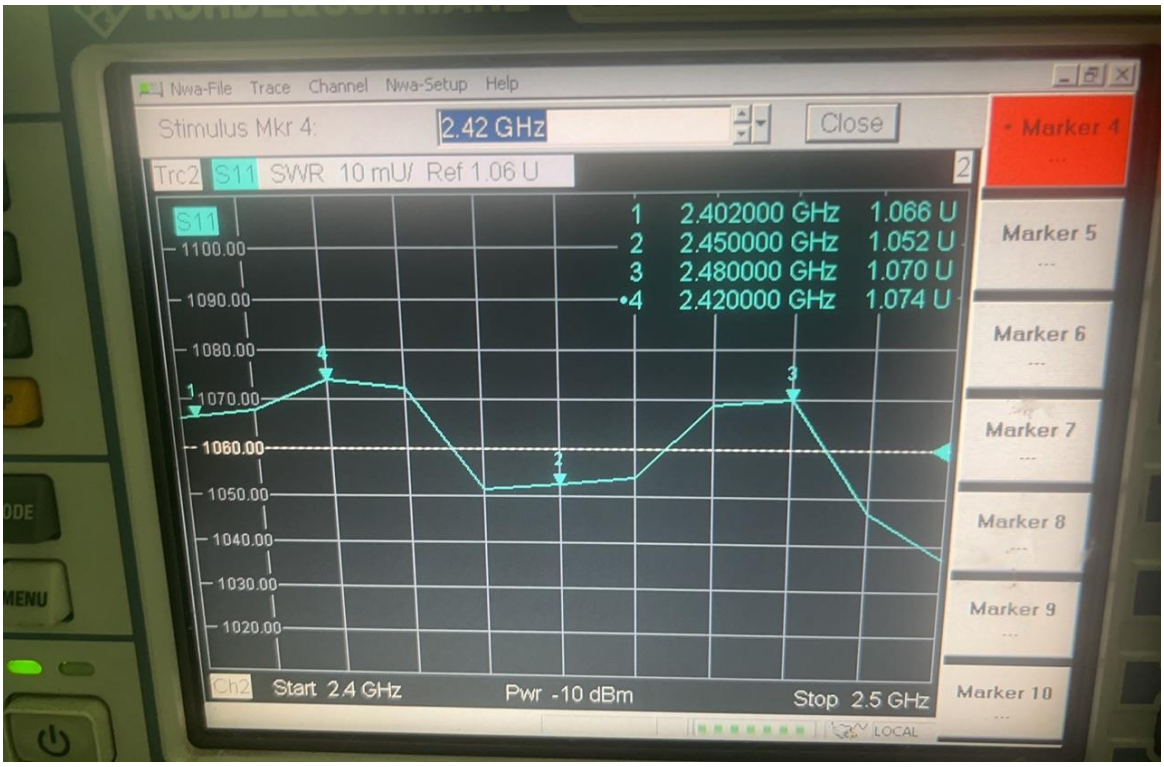

Any report having not been signed by authorized approver, or having been altered without authorization, or having not been stamped by the "Dedicated Testing/Inspection Stamp" is deemed to be invalid. Copying or excerpting portion of, or altering the content of the report is not permitted without the written authorization of AGC. The test results presented in the report apply only to the tested sample. Any objections to report issued by AGC should be submitted to AGC within 15days after the issuance of the test report. Further enquiry of validity or verification of the test report should be addressed to AGC by agc01@agccert.com.

7.2. GAIN AND EFFICIENCY

Frequency(MHz)	Efficiency(dB)	Efficiency(%)	Gain(dBi)
2400	-8.592	13.828	-2.846
2410	-8.310	14.757	-2.613
2420	-8.215	15.082	-2.712
2430	-8.061	15.627	-2.909
2440	-7.989	15.888	-3.023
2450	-8.141	15.344	-3.169
2460	-8.389	14.491	-3.403
2470	-8.786	13.225	-3.737
2480	-8.990	12.617	-3.795
2490	-9.367	11.569	-4.040
2500	-9.913	10.203	-4.433

Any report having not been signed by authorized approver, or having been altered without authorization, or having not been stamped by the "Dedicated Testing/Inspection Stamp" is deemed to be invalid. Copying or excerpting portion of, or altering the content of the report is not permitted without the written authorization of AGC. The test results presented in the report apply only to the tested sample. Any objections to report issued by AGC should be submitted to AGC within 15days after the issuance of the test report. Further enquiry of validity or verification of the test report should be addressed to AGC by agc01@agccert.com.

7.3. RADIATION PATTERN

2D POLAR RADIATION PATTERN

FREQUENCY=2400MHZ

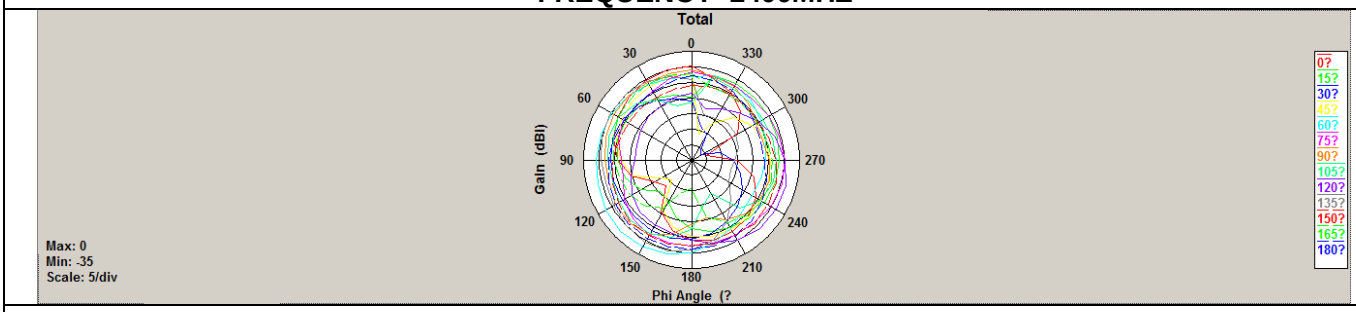

FREQUENCY=2450MHZ

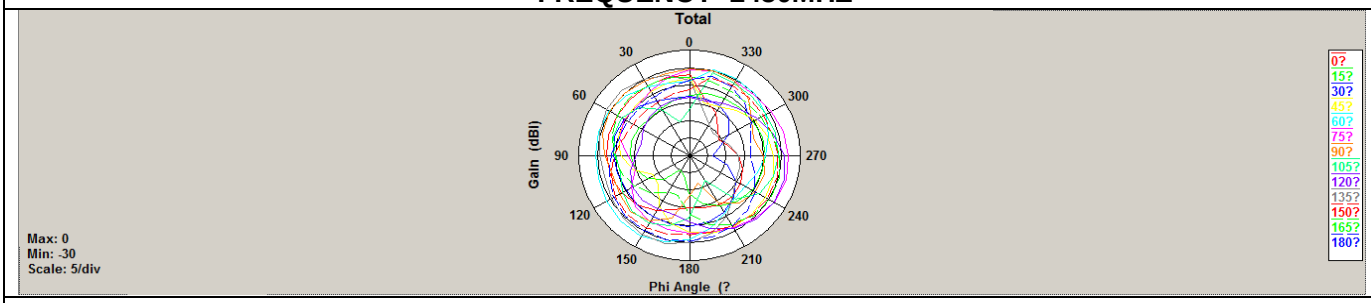

FREQUENCY=2500MHZ

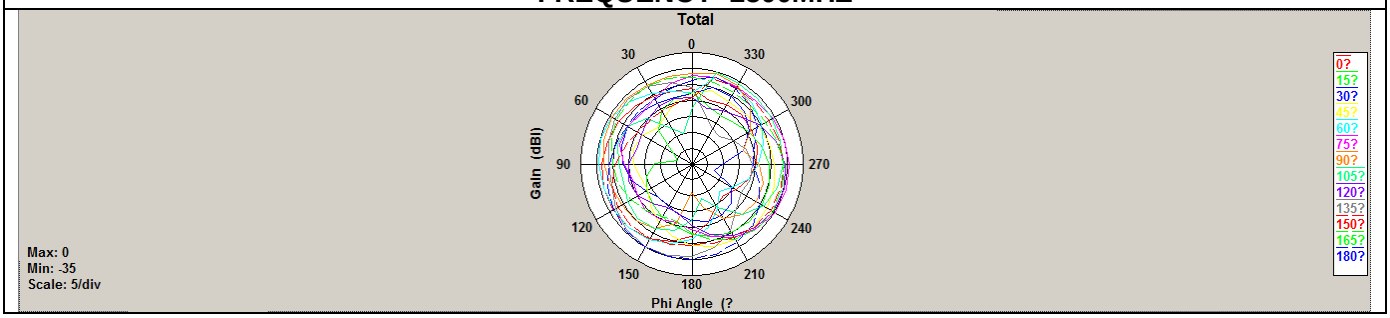

Any report having not been signed by authorized approver, or having been altered without authorization, or having not been stamped by the "Dedicated Testing/Inspection Stamp" is deemed to be invalid. Copying or excerpting portion of, or altering the content of the report is not permitted without the written authorization of AGC. The test results presented in the report apply only to the tested sample. Any objections to report issued by AGC should be submitted to AGC within 15days after the issuance of the test report. Further enquiry of validity or verification of the test report should be addressed to AGC by agc01@agccert.com.

3D RADIATION PATTERN

FREQUENCY=2400MHZ

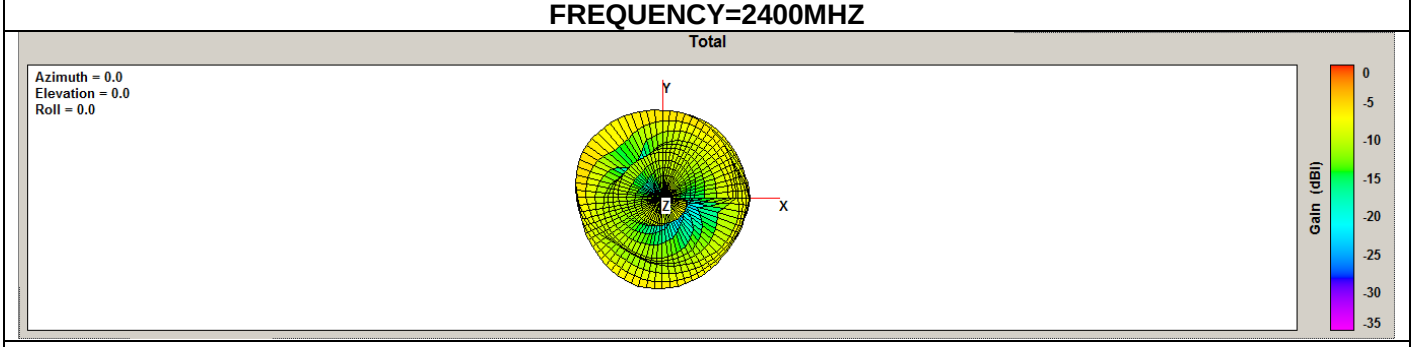

FREQUENCY=2450MHZ

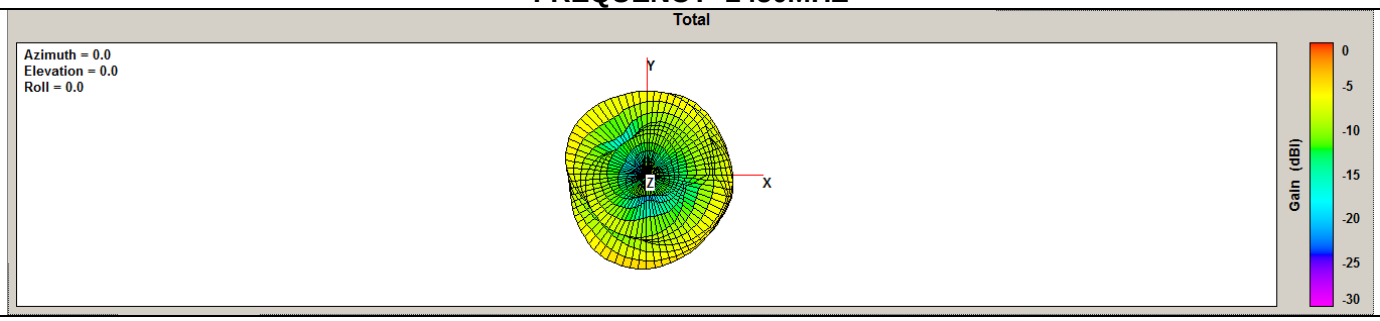

FREQUENCY=2500MHZ

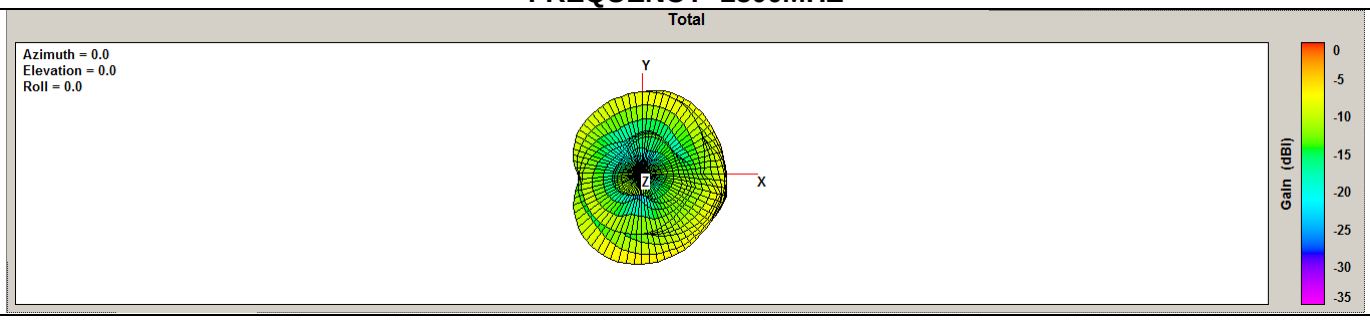

Any report having not been signed by authorized approver, or having been altered without authorization, or having not been stamped by the "Dedicated Testing/Inspection Stamp" is deemed to be invalid. Copying or excerpting portion of, or altering the content of the report is not permitted without the written authorization of AGC. The test results presented in the report apply only to the tested sample. Any objections to report issued by AGC should be submitted to AGC within 15days after the issuance of the test report. Further enquiry of validity or verification of the test report should be addressed to AGC by agc01@agccert.com.

APPENDIX A: PHOTOGRAPHS OF TEST SETUP

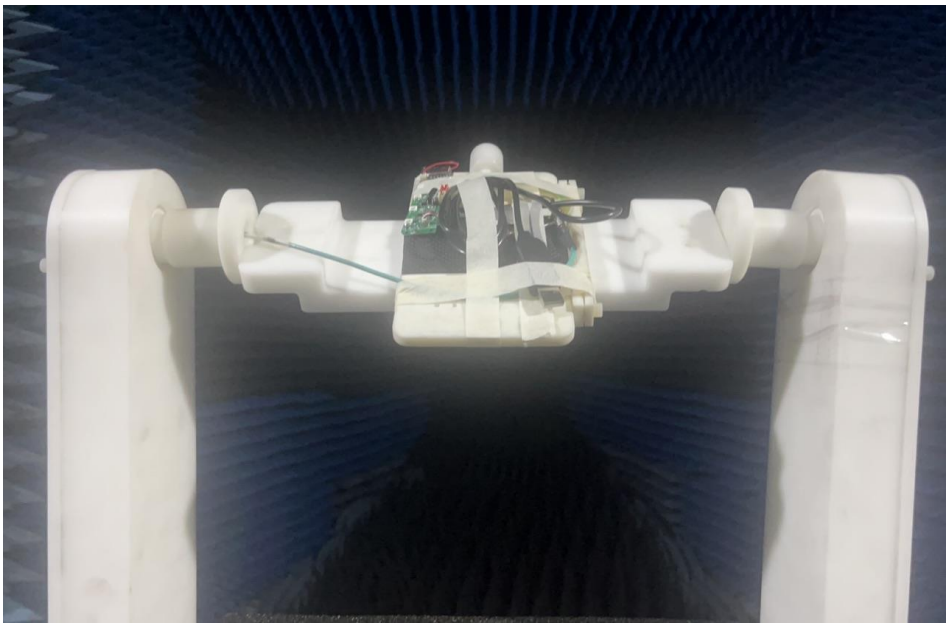

Any report having not been signed by authorized approver, or having been altered without authorization, or having not been stamped by the "Dedicated Testing/Inspection Stamp" is deemed to be invalid. Copying or excerpting portion of, or altering the content of the report is not permitted without the written authorization of AGC. The test results presented in the report apply only to the tested sample. Any objections to report issued by AGC should be submitted to AGC within 15days after the issuance of the test report. Further enquiry of validity or verification of the test report should be addressed to AGC by agc01@agccert.com.

APPENDIX B: PHOTOGRAPHS OF EUT

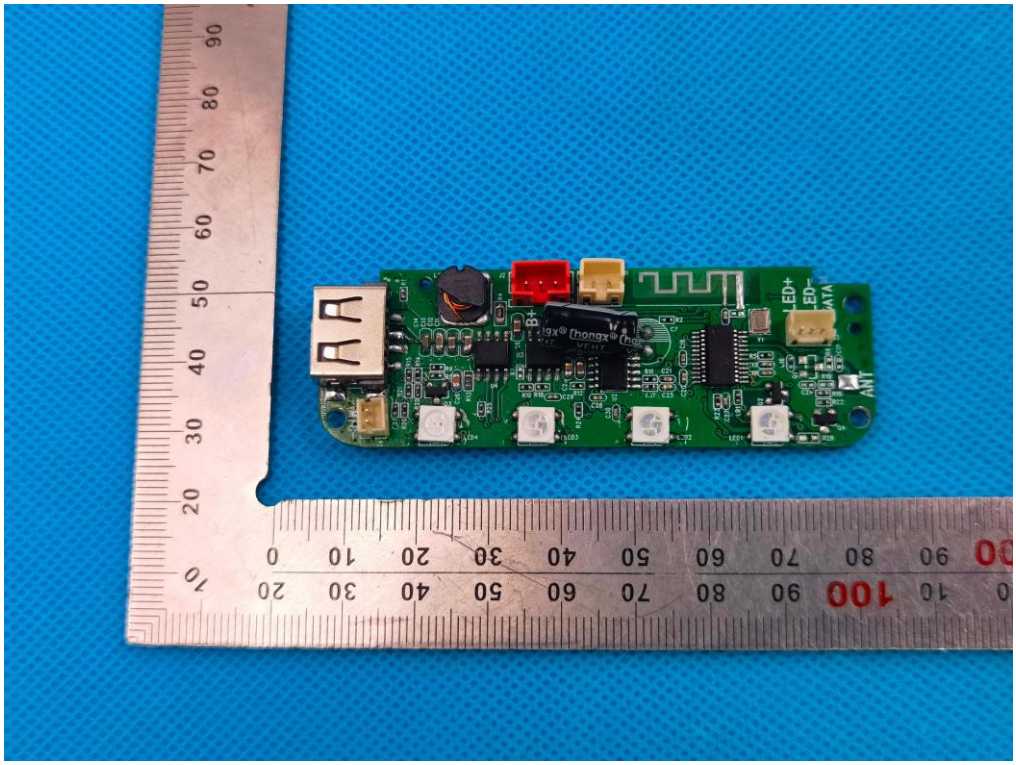

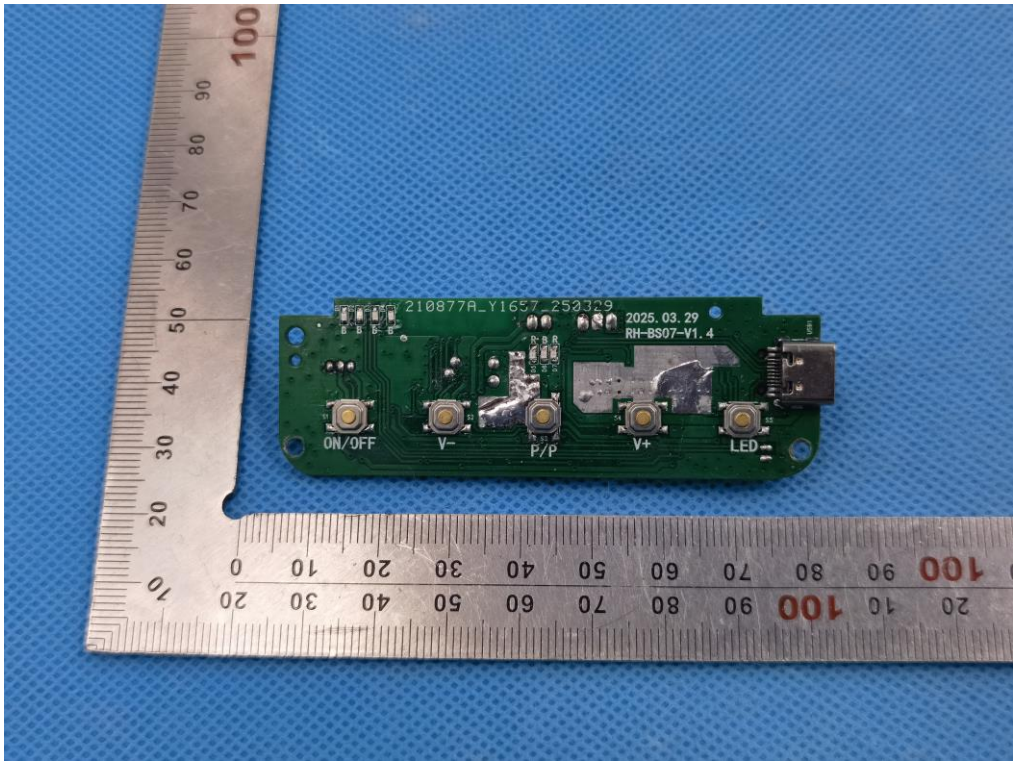

Any report having not been signed by authorized approver, or having been altered without authorization, or having not been stamped by the "Dedicated Testing/Inspection Stamp" is deemed to be invalid. Copying or excerpting portion of, or altering the content of the report is not permitted without the written authorization of AGC. The test results presented in the report apply only to the tested sample. Any objections to report issued by AGC should be submitted to AGC within 15days after the issuance of the test report. Further enquiry of validity or verification of the test report should be addressed to AGC by agc01@agccert.com.

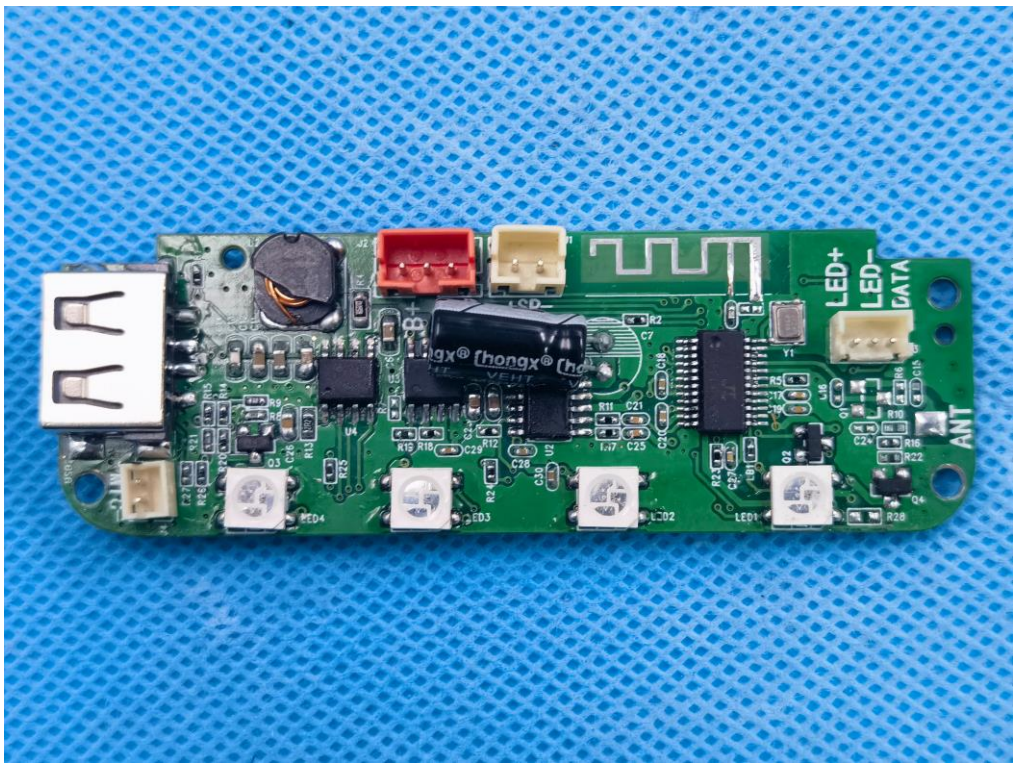

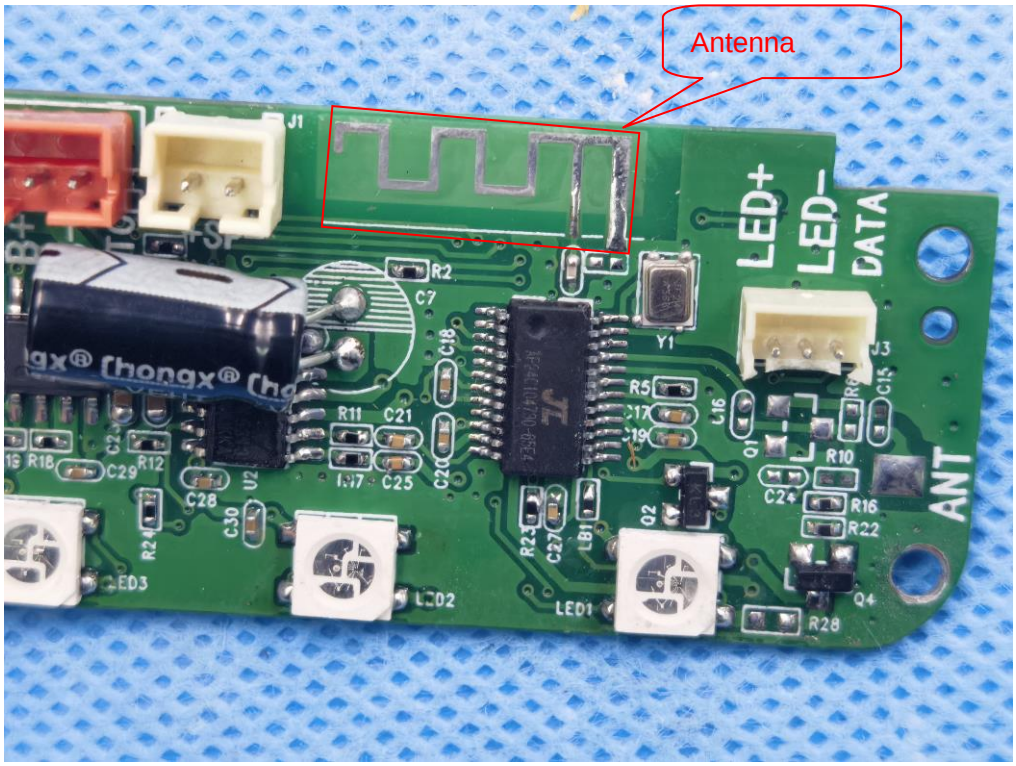

Any report having not been signed by authorized approver, or having been altered without authorization, or having not been stamped by the "Dedicated Testing/Inspection Stamp" is deemed to be invalid. Copying or excerpting portion of, or altering the content of the report is not permitted without the written authorization of AGC. The test results presented in the report apply only to the tested sample. Any objections to report issued by AGC should be submitted to AGC within 15days after the issuance of the test report. Further enquiry of validity or verification of the test report should be addressed to AGC by agc01@agccert.com.

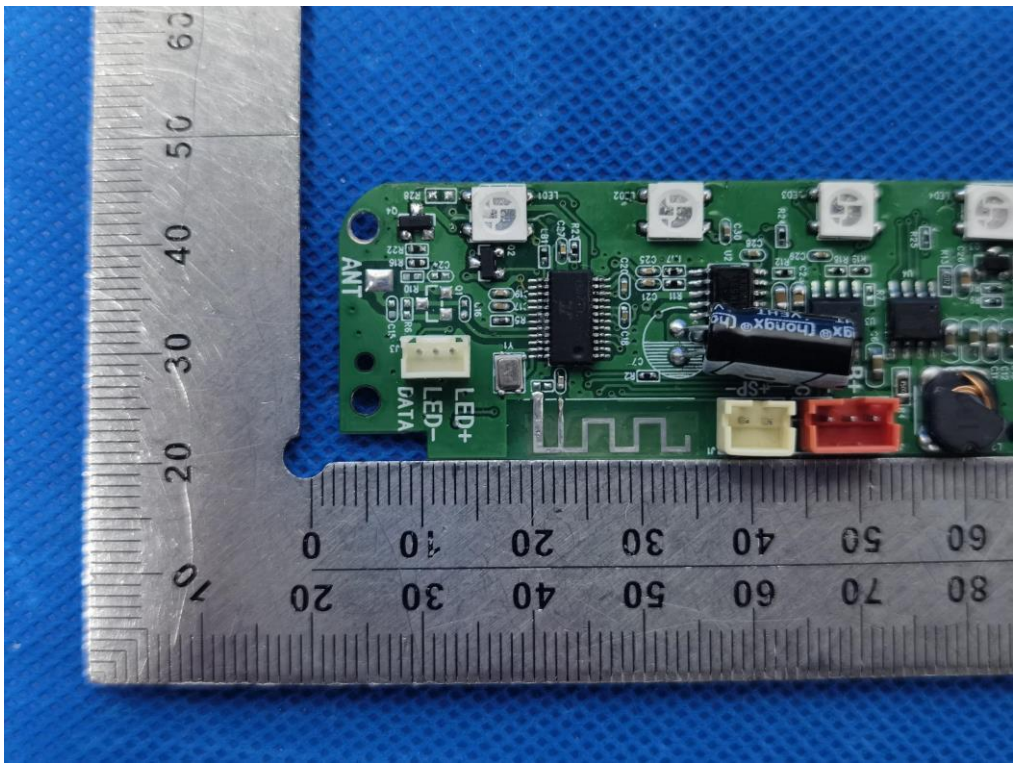

Any report having not been signed by authorized approver, or having been altered without authorization, or having not been stamped by the "Dedicated Testing/Inspection Stamp" is deemed to be invalid. Copying or excerpting portion of, or altering the content of the report is not permitted without the written authorization of AGC. The test results presented in the report apply only to the tested sample. Any objections to report issued by AGC should be submitted to AGC within 15days after the issuance of the test report. Further enquiry of validity or verification of the test report should be addressed to AGC by agc01@agccert.com.

Conditions of Issuance of Test Reports

1. All samples and goods are accepted by the Attestation of Global Compliance (Shenzhen) Co., Ltd (the "Company") solely for testing and reporting in accordance with the following terms and conditions. The company provides its services on the basis that such terms and conditions constitute express agreement between the company and any person, firm or company requesting its services (the "Clients").

2. Any report issued by Company as a result of this application for testing services (the "Report") shall be issued in confidence to the Clients and the Report will be strictly treated as such by the Company. It may not be reproduced either in its entirety or in part and it may not be used for advertising or other unauthorized purposes without the written consent of the Company. The Clients to whom the Report is issued may, however, show or send it, or a certified copy thereof prepared by the Company to its customer, supplier or other persons directly concerned. The Company will not, without the consent of the Clients, enter into any discussion or correspondence with any third party concerning the contents of the Report, unless required by the relevant governmental authorities, laws or court orders.

3. The Company shall not be called or be liable to be called to give evidence or testimony on the Report in a court of law without its prior written consent, unless required by the relevant governmental authorities, laws or court orders.

4. In the event of the improper use of the report as determined by the Company, the Company reserves the right to withdraw it, and to adopt any other additional remedies which may be appropriate.

5. Samples submitted for testing are accepted on the understanding that the Report issued cannot form the basis of, or be the instrument for, any legal action against the Company.

6. The Company will not be liable for or accept responsibility for any loss or damage however arising from the use of information contained in any of its Reports or in any communication whatsoever about its said tests or investigations.

7. Clients wishing to use the Report in court proceedings or arbitration shall inform the Company to that effect prior to submitting the sample for testing.

8. The Company is not responsible for recalling the electronic version of the original report when any revision is made to them. The Client assumes the responsibility to providing the revised version to any interested party who uses them.

9. Subject to the variable length of retention time for test data and report stored hereinto as otherwise specifically required by individual accreditation authorities, the Company will only keep the supporting test data and information of the test report for a period of six years. The data and information will be disposed of after the aforementioned retention period has elapsed. Under no circumstances shall we provide any data and information which has been disposed of after retention period. Under no circumstances shall we be liable for damage of any kind, including (but not limited to) compensatory damages, lost profits, lost data, or any form of special, incidental, indirect, consequential or punitive damages of any kind, whether based on breach of contract of warranty, tort (including negligence), product liability or otherwise, even if we are informed in advance of the possibility of such damages.

----End of Report----

Any report having not been signed by authorized approver, or having been altered without authorization, or having not been stamped by the "Dedicated Testing/Inspection Stamp" is deemed to be invalid. Copying or excerpting portion of, or alterations to the contents of the report is not permitted without the written authorization of AGC. The test results presented in the report apply only to the tested sample. Any objections to report issued by AGC should be submitted to AGC within 15days after the issuance of the test report. Further enquiry of validity or verification of the test report should be addressed to AGC by agc01@agccert.com.