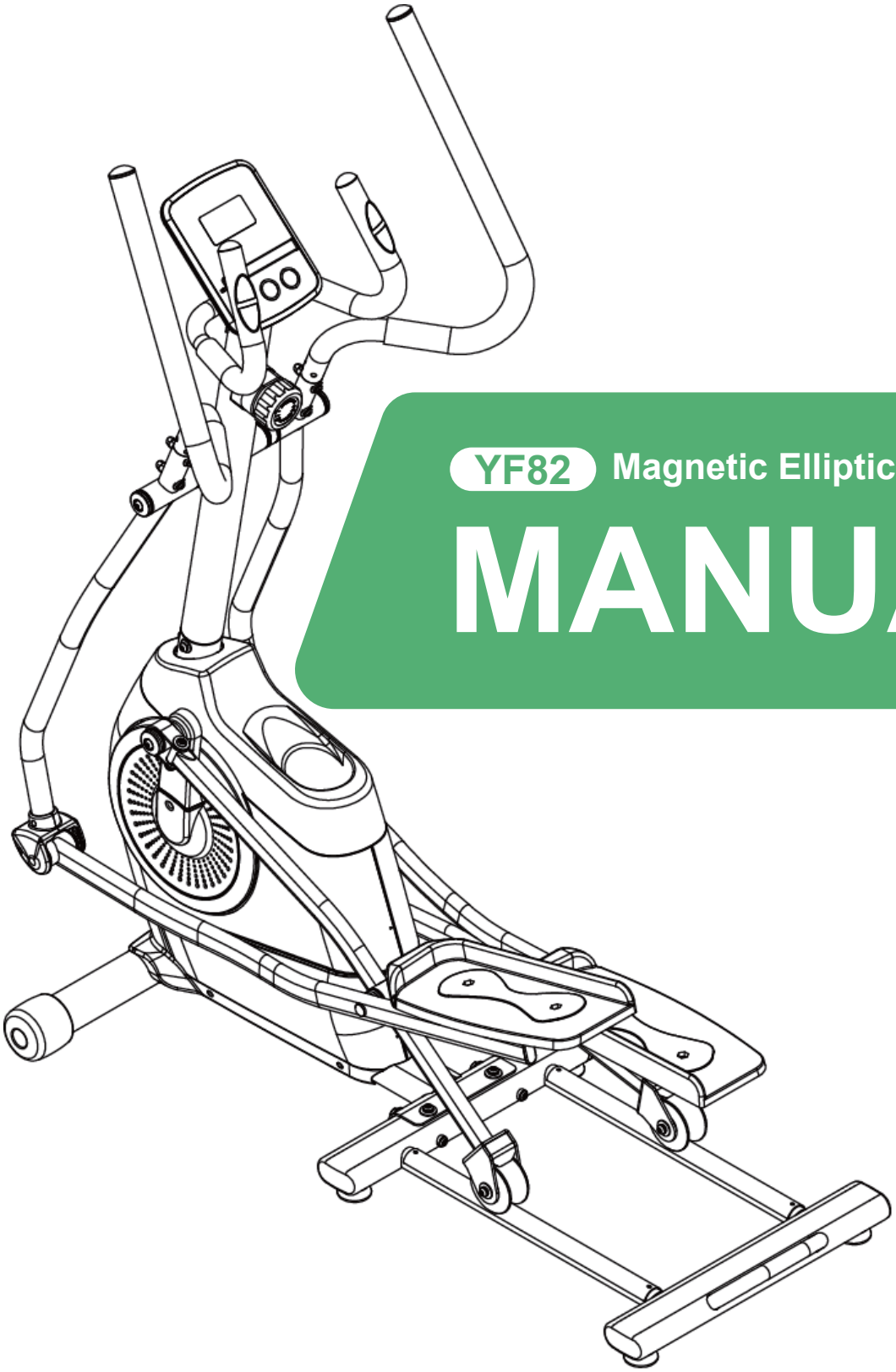

YF82 Magnetic Elliptical Machine

MANUAL

Phone: 6269918973
Email: youngfitservice88@gmail.com
Working Time: Monday - Friday
9:00AM-12:00PM 2:00PM-6:00PM (PST)

INSTALLATION
VEDIO

CONTENT

1. Safety instructions ---------- 1

2. Exercise instructions ---------- 2

3. General instructions ---------- 3

4. Assembly instruction ---------- 4

5. Part list ---------- 13

6. Functions of the monitor ---------- 15

7. App instructions ---------- 17

1. Safety Instructions

1. Consult your doctor before starting any exercise program. It is advisable to undergo a complete physical examination.

2. Work at the recommended exercise level, do not overexert yourself. If you feel any pain or discomfort, stop exercising immediately and consult your doctor.

3. Use the appliance on a solid, flat surface, with some type of protection for the floor or carpet. In the interest of safety, the equipment must have at least 1 metre of free space around it. Do not allow children to play with the equipment or in the immediate vicinity. Keep your hands well away from any of the moving parts.

4. Check the elliptical trainer before starting the exercise; to make sure that all of the parts are attached and that the nuts, bolts, pedals and focus bars have been tightened correctly prior to use.

5. Any adjustment device that could interfere with the user's movement should not be left projecting.

6. People should be careful with the joint place between pedal tubes and swing bar tubes. If fingers get stuck, injuries could be caused.

7. Wear appropriate clothing and footwear for the exercise. Do not use loose clothing. Do not wear leather soled shoes or footwear with high heels.

8. This appliance has been tested and it complies with standard EN957, suitable for domestic use only. Braking is independent of speed.

Important.

1. Read the instructions carefully before proceeding to assemble the equipment.

2. Remove all the parts from the cardboard packaging and check them against the parts list to ensure that there is nothing missing.

3. Do not throw the cardboard away until the elliptical trainer is fully assembled.

4. Always use the appliance in accordance with the instructions. If you discover any defective component while assembling or checking the equipment, or if you hear any strange noise during exercise then stop. Do not use the appliance until the problem has been resolved.

2. Exercise Instruction

Use of the ELLIPTICAL TRAINER offers various benefits; it will improve fitness,muscle tone and when used in conjunction with a calorie controlled diet it will help you to lose weight.

1.Warm-up phase

This phase speeds up the body's blood circulation and gets the muscles ready for exercise. It also reduces the risk of cramp and sprains. It is advisable to do some stretching exercises, as shown below. Each stretch should last approximately 30 seconds, do not overexert the muscles. If you feel pain, STOP.

Reach with your left hand behind your head to the right shoulder and pull with the right hand slightly to the left elbow.After 20sec. switch arm.	Bend forward as far forward as possible and let your legs almost stretched. Show it with your fingers in the direction of toe.2x20sec.	Sit down with one leg stretched out on the floor and bend forward and try to reach the foot with your hands. 2x20sec.	Kneel in a wide lunge forward and support yourself with your hands on the floor. Press the pelvis down. Change after 20 sec leg.

2. Exercise phase

This phase requires the greatest physical exertion. After regular exercise the leg muscles will become more flexible. It is important to keep the rhythm constant. The rhythm of the exercise should be fast enough to bring the heart rate into the target area, as shown on the following graph:

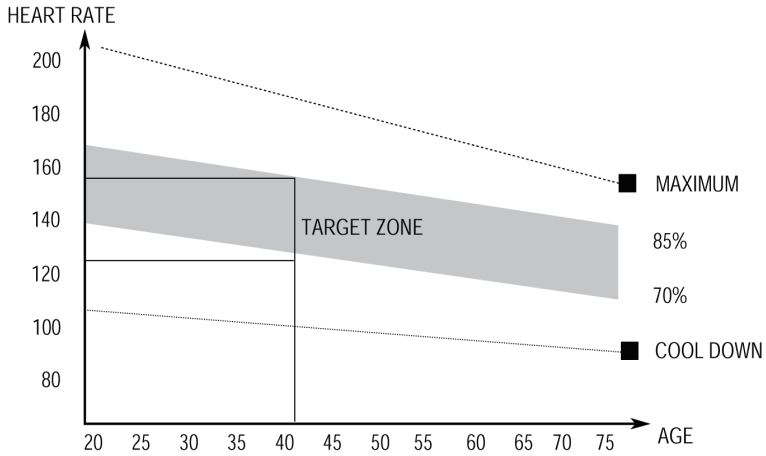

This phase should last at least 12 minutes, although it is advisable for most people to start off with sessions of 10-15 minutes.

3. Cool-down phase

This phase allows the cardiovascular and muscle system to relax. It consists of repeating the warm-up exercises, i.e. reducing the rhythm and continuing for approximately 5 minutes. Repeat the stretching exercises but remember not to overexert the muscles. Eventually your training sessions will have to become longer and more intensive. It is advisable to exercise at least three days per week, on alternate days.

4. Muscle toning

You should select a high exertion level in order to tone muscles during exercise. This entails greater stress on the leg muscles, so it may be wise to reduce exercise times. If you also wish to improve your overall fitness then you should change your training program. Do the warm-up and cool down exercises as normal but when you are reaching the end of the exercise phase, increase the exertion level in order to make your legs work harder. You should reduce speed in order to keep your heart rate within the target area.

5. Weight loss

In this case the important factor is the effort made. The more intense and the longer the session, the greater the number of calories burned. Even though you are doing the same work as you do to improve fitness, the objective has changed.

3. General Instructions

Carefully read through the instructions contained in this manual. It provides you with important information about assembly, safety and use of the machine.

1. This unit has been designed for home use.
2. Keep your hands well away from any of the moving parts.
3. Parents or individuals responsible for children should always take precautions considering their natural curiosity and how it often leads to situations and behaviors that can result in accidents. This unit should not be used as a toy under any circumstances.
4. The owner is responsible for ensuring that anyone who uses the machine is duly informed about the necessary precautions.
5. Your unit can only be used by one person at a time.
   Use suitable clothing and footwear. Tie up your shoelace correctly.

4. Assembly Instruction

Please check the screw accessories package before assembly

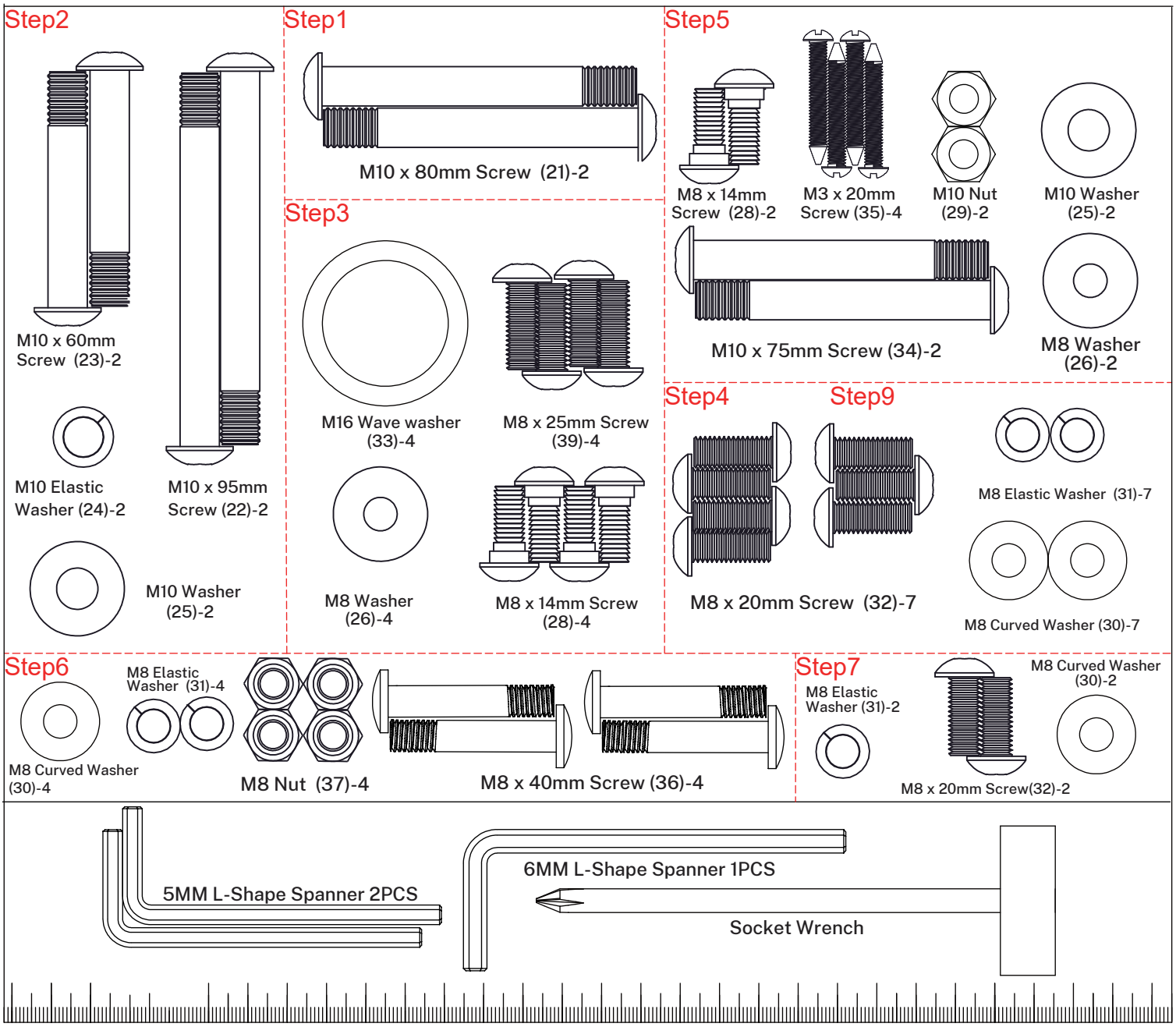

1. Install the Front Stabilizer (2) as shown.

Attach the Front Stabilizer (2) to the Frame (1) with two M10 x 80mm Screws (21) to tighten.

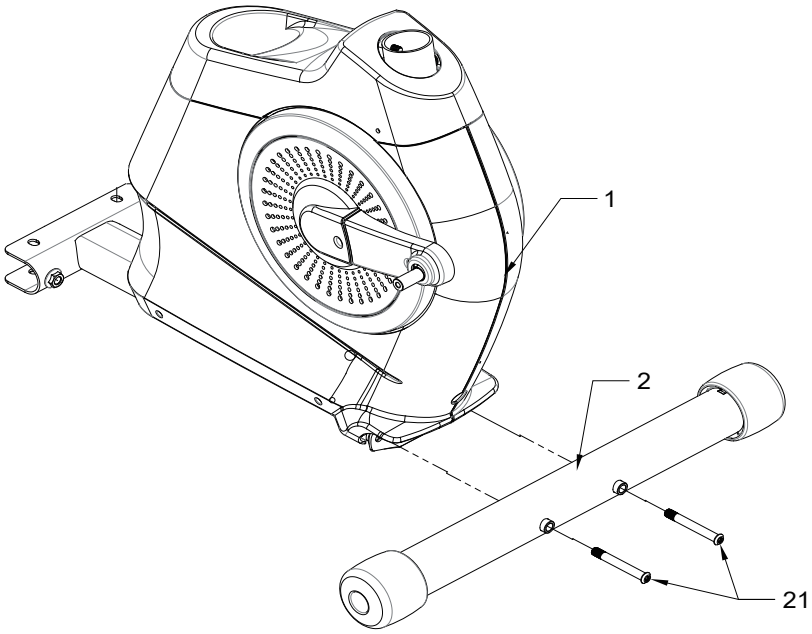

2. Install the Roller Rail (3) as shown.

- Tighten the four Leveling Foot (19) on the Roller Rail (3).
- Attach the Roller Rail (3) to the Frame (1) with two M10 x 95mm Screw (22) to tighten.
- Fasten with two M10 x 60mm Screw (23), two M10 Elastic Washer (24) and two M10 Washer (25) from above the Roller Rail (3).

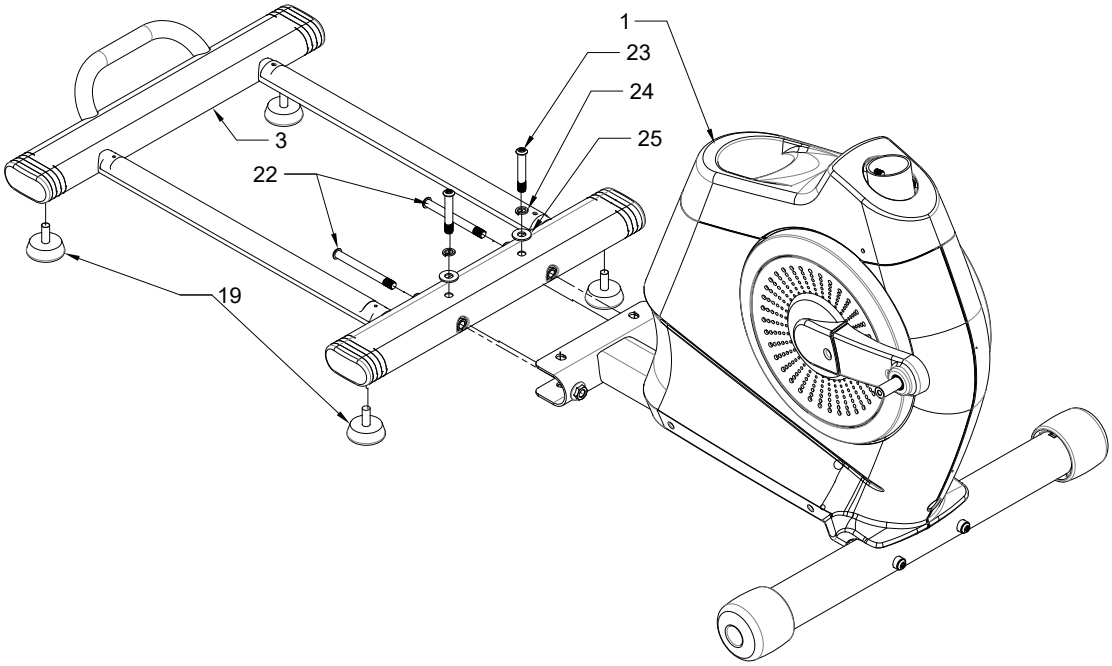

3. Install the Roller Pivot Leg (6) and Right/Left Pedal Arm(7/8) as shown.

- Fasten the Roller Pivot Leg (6) to the Crank of the Frame (1).
- Use one M16 Wave washer (33), one M8 Washer (26) , one Pivot Cover (27) and One M8 x 14mm Screw (28) to tighten.
- Fasten the Left Pedal (5) to the Left Pedal Arm (8) with two M8 x 25mm Screw (39).
- Attach the Left Pedal Arm (8) into the Roller Pivot Leg (6) with one M16 Wave washer (33), one M8 Washer (26) , one Pivot Cover (27) and One M8 x 14mm Screw (28) to tighten.
  Repeat this step on the Right Pedal Arm (7).

Tip: Grease from the hardware kit should be applied to the Crank of the Frame before installation.

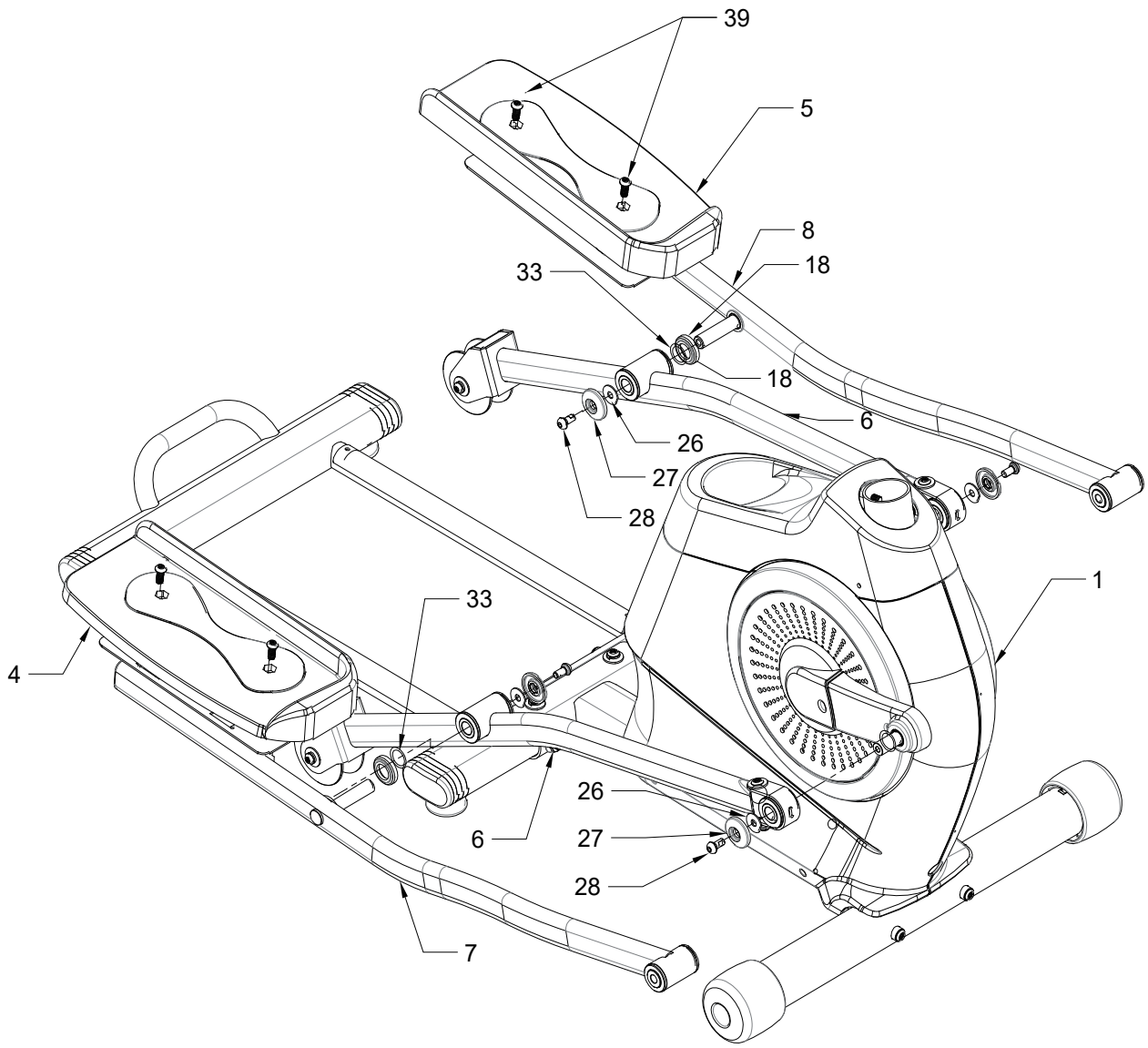

4. Install the Upright (9) as shown.

- Hold the Upright (9) against the Frame (1), Attach the Upper TCD with Lower TCD (as shown
- picture 4-A), and then Attach the Upper Sensor wire with Lower Sensor wire (as shown picture 4-B).
- Attach the Upright (9) to the Frame (1) with Four M8 Curved Washer (30), Four M8 Elastic
- Washer (31) and Four M8 x 20mm Screw (32). **(Tighten the screws and press the Accessory Tray after installing all the parts.)**

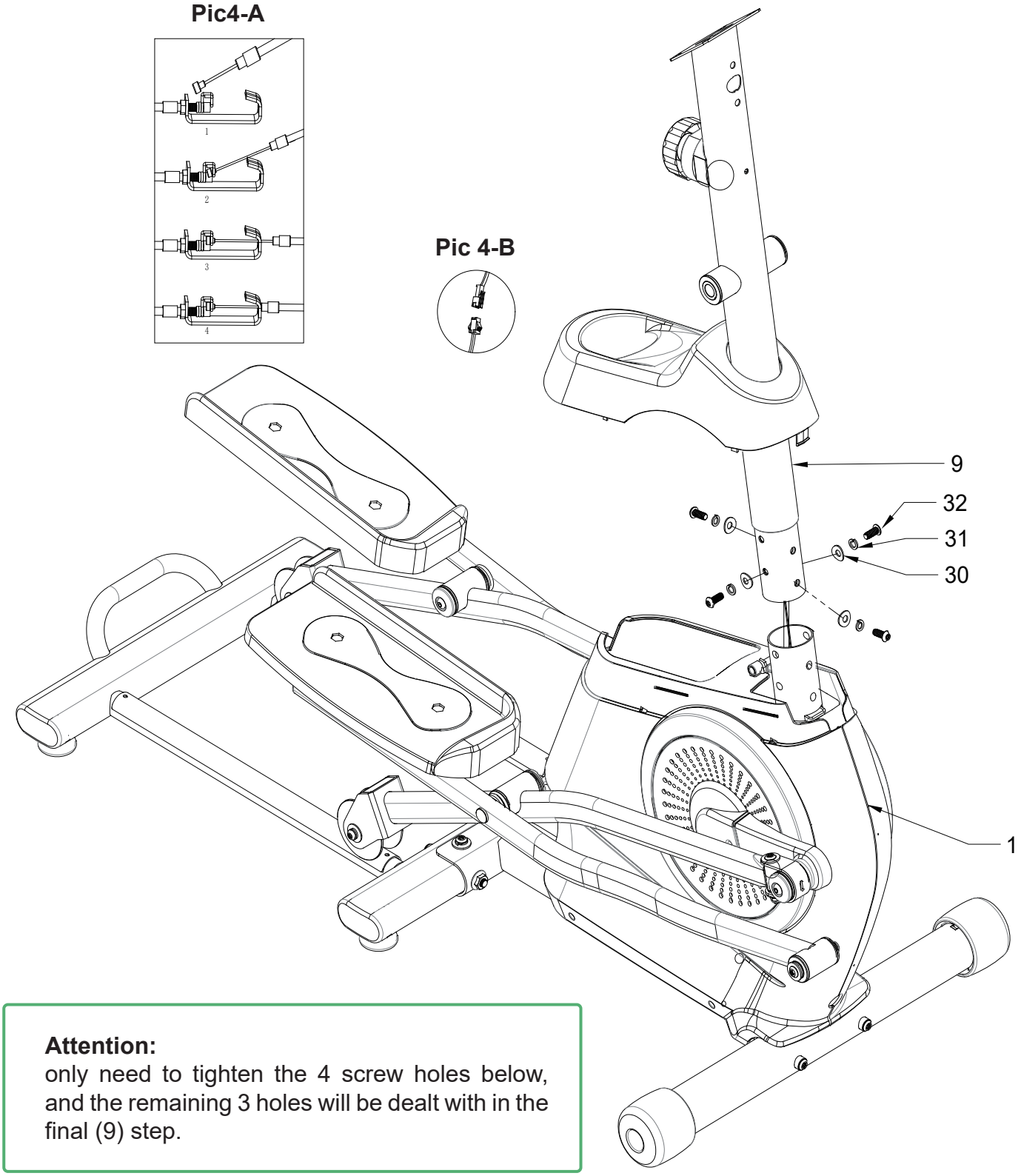

Attention:
only need to tighten the 4 screw holes below, and the remaining 3 holes will be dealt with in the final (9) step.

5. Install the Right/Left Lower Arm (11/12) as shown.

- Insert the Pivot Axle (10) into the Upright (9), Next, slide the Pivot Spacer (20) onto both sides of
- the Pivot Axle (10).
- Attach the Left Lower Arm (12) to the Pivot Axle (10) with one M8 Washer (26), one Pivot Cover (27) and one M8 x 14mm Screw (28) to tighten.
- Attach the Left Lower Arm (12) to the Left Pedal Arm (8) with one M10 Washer (25), one M10 x 75mm Screw (34) and one M10 Nut (29) to tighten.
- Fasten the Lower Arm Cover (13) together around Left Lower Arm (12) , and attach them with two M3 x 20mm Screw (35) to tighten.
- Repeat this step on the Right Lower Arm (11).

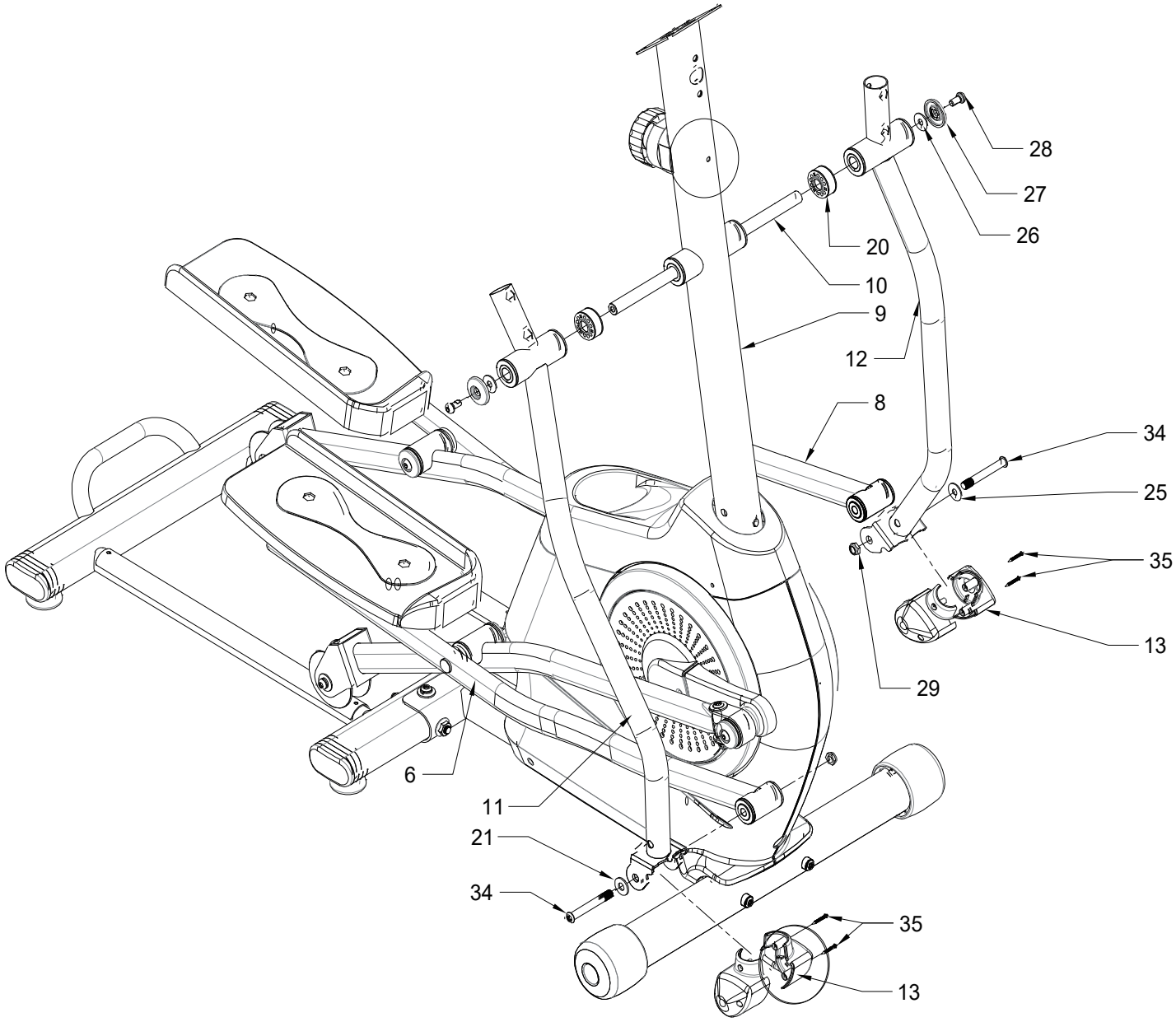

6. Install the Right/Left Upper Arm (14/15) as shown.

- Insert the Left Upper Arm (15) into the Left Lower Arm (12) with two M8 Curved Washer (30), two
- M8 Elastic Washer (31) and two M8 x 40mm Screw (36) through the holes, and then tighten the M8 Nut (37).
- Repeat this step on the Right Upper Arm (14).

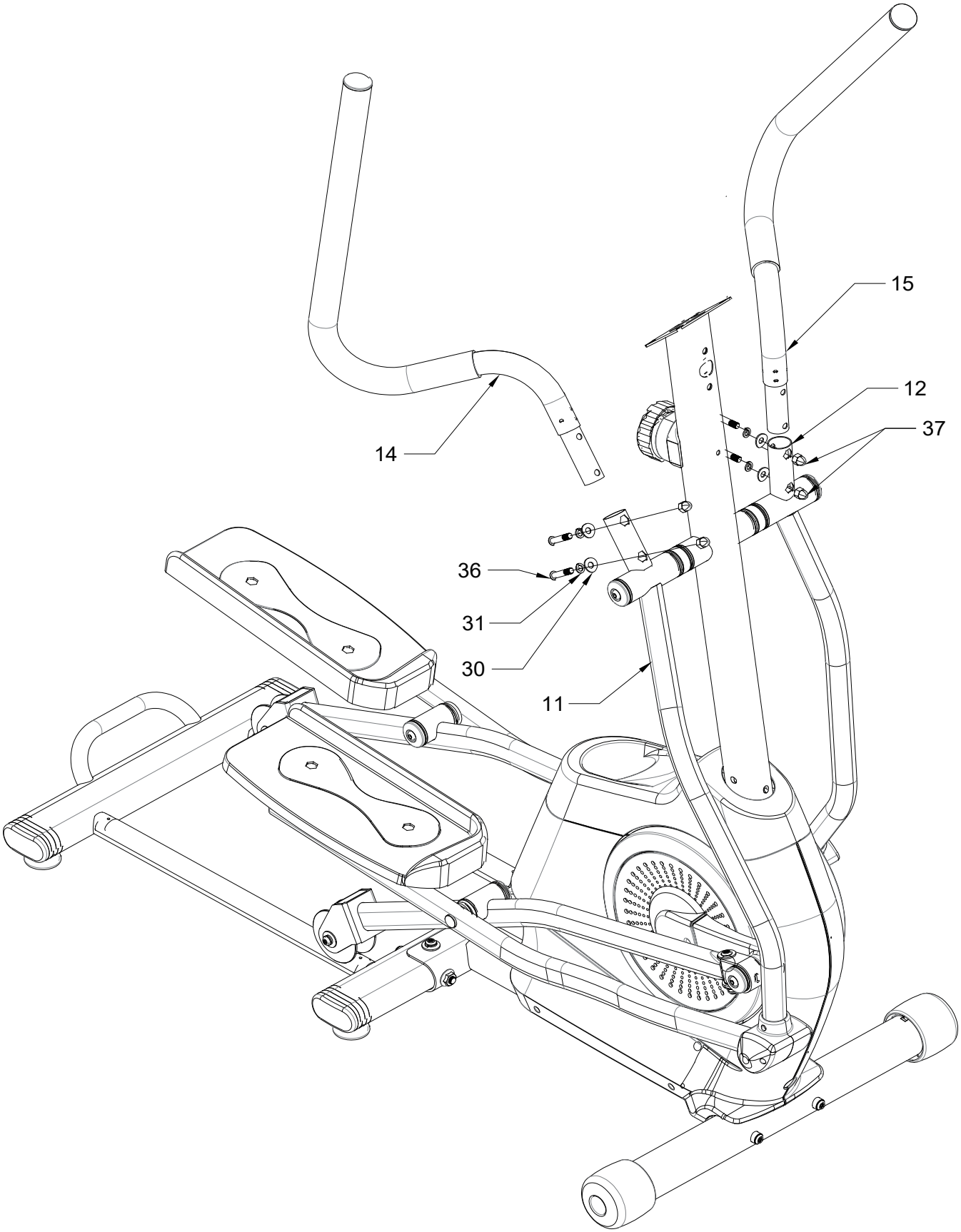

7. Install the Handlebar (16) as shown.

- Insert Pulse Wire of the Handlebar (16) into the Upright (9), and then use two M8 Curved Washer (30), two M8 Elastic Washer (31) and two M8 x 20mm Screw (32) to tighten.

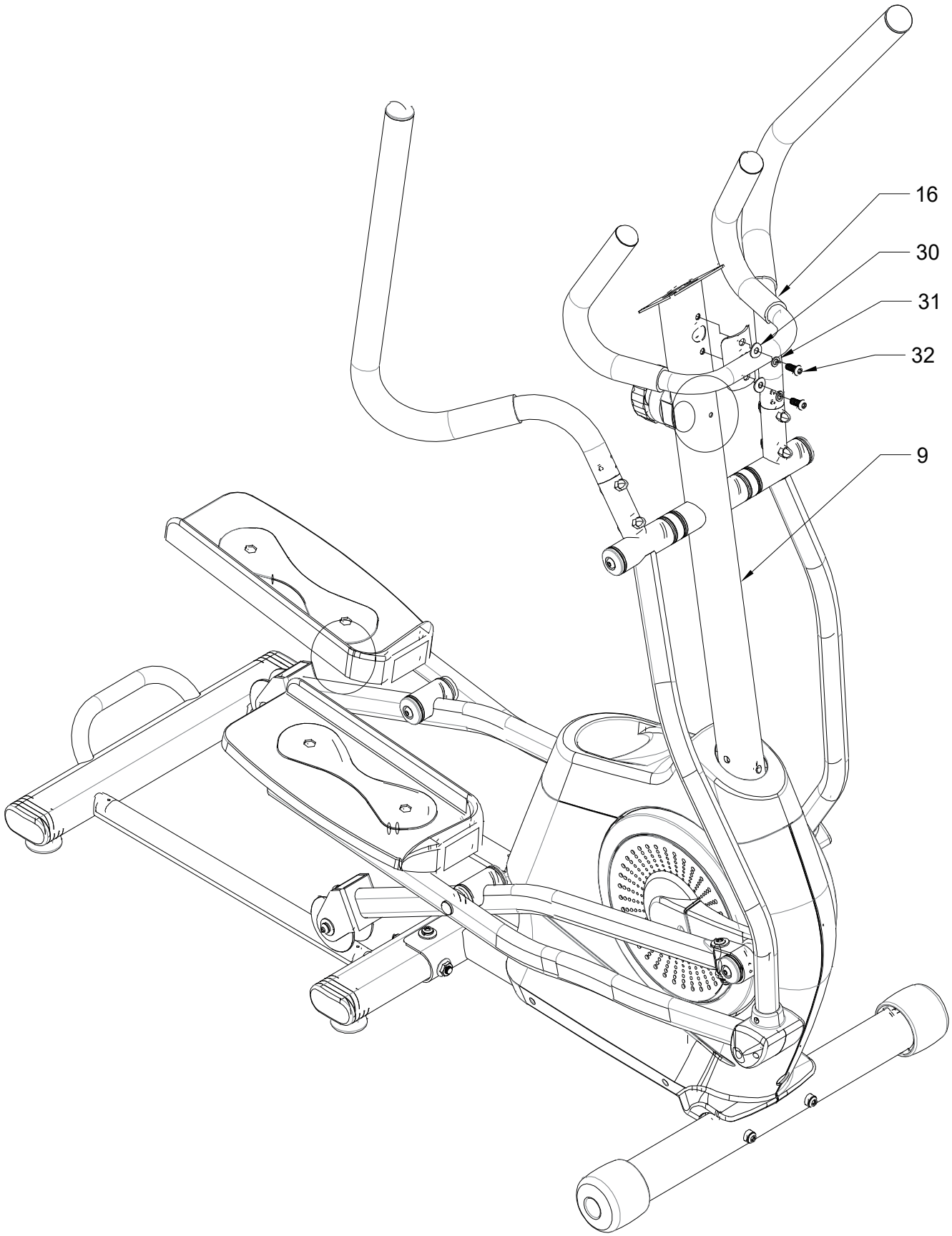

8. Install the Console (17) as shown.

- Hold the Console (17) near the Upright (9), connect the wires on the Console to the Main Wire and the Pulse Wire, and then, insert the excess wire into the Upright (9).
- Attach the Console (17) to the Upright (9) with four M5 x 12mm Screw (38) to tighten.

Note:
Electronic display console without two AA batteries, need to be purchased separately.

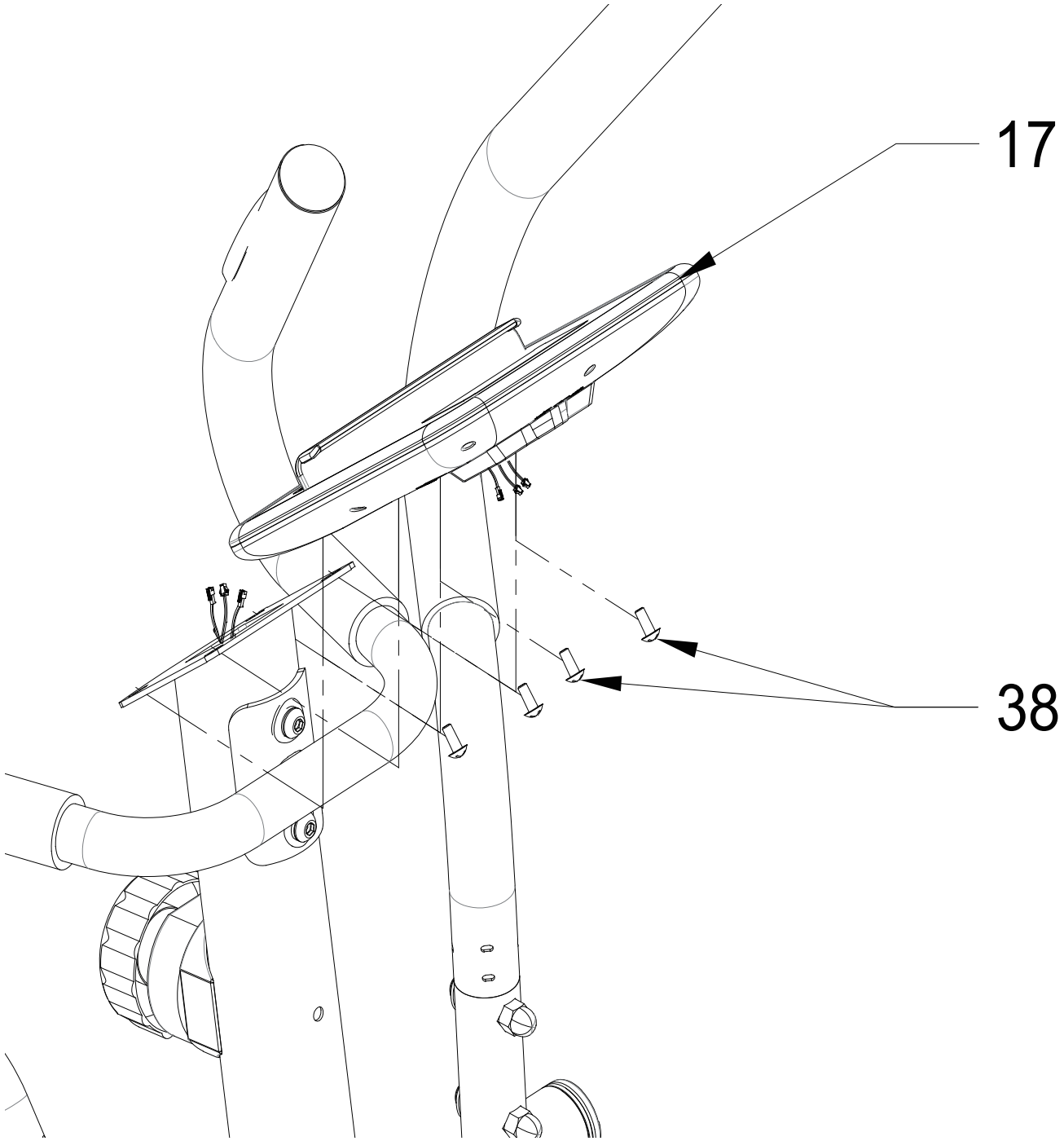

9. Use Three M8 Curved Washer (30), Three M8 Elastic Washer (31) and ThreeM8 x 20mm Screw (32) to lock tight of the upright (9) . (After pressing the Accessory Tray into the frame cover)

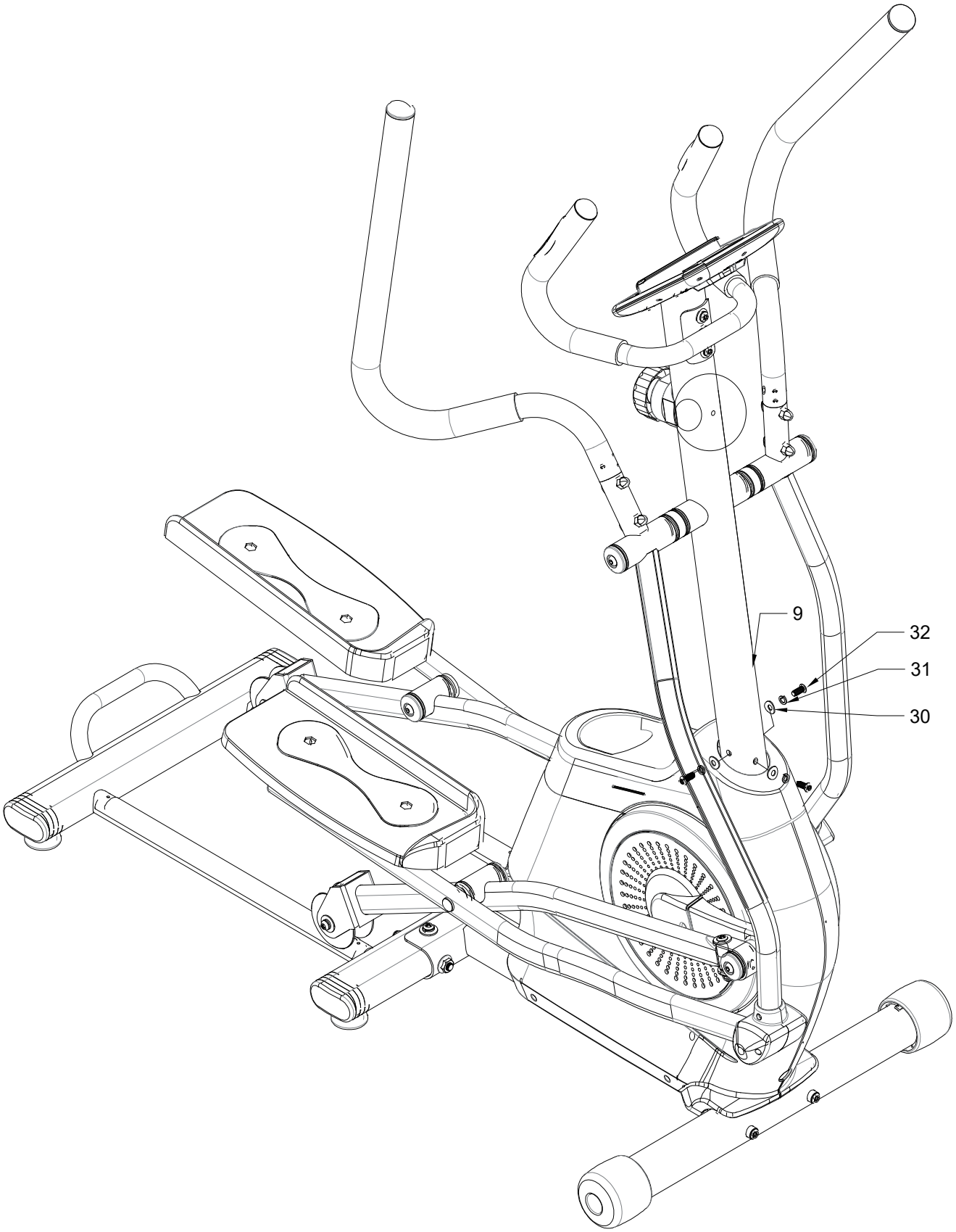

5. PART LIST

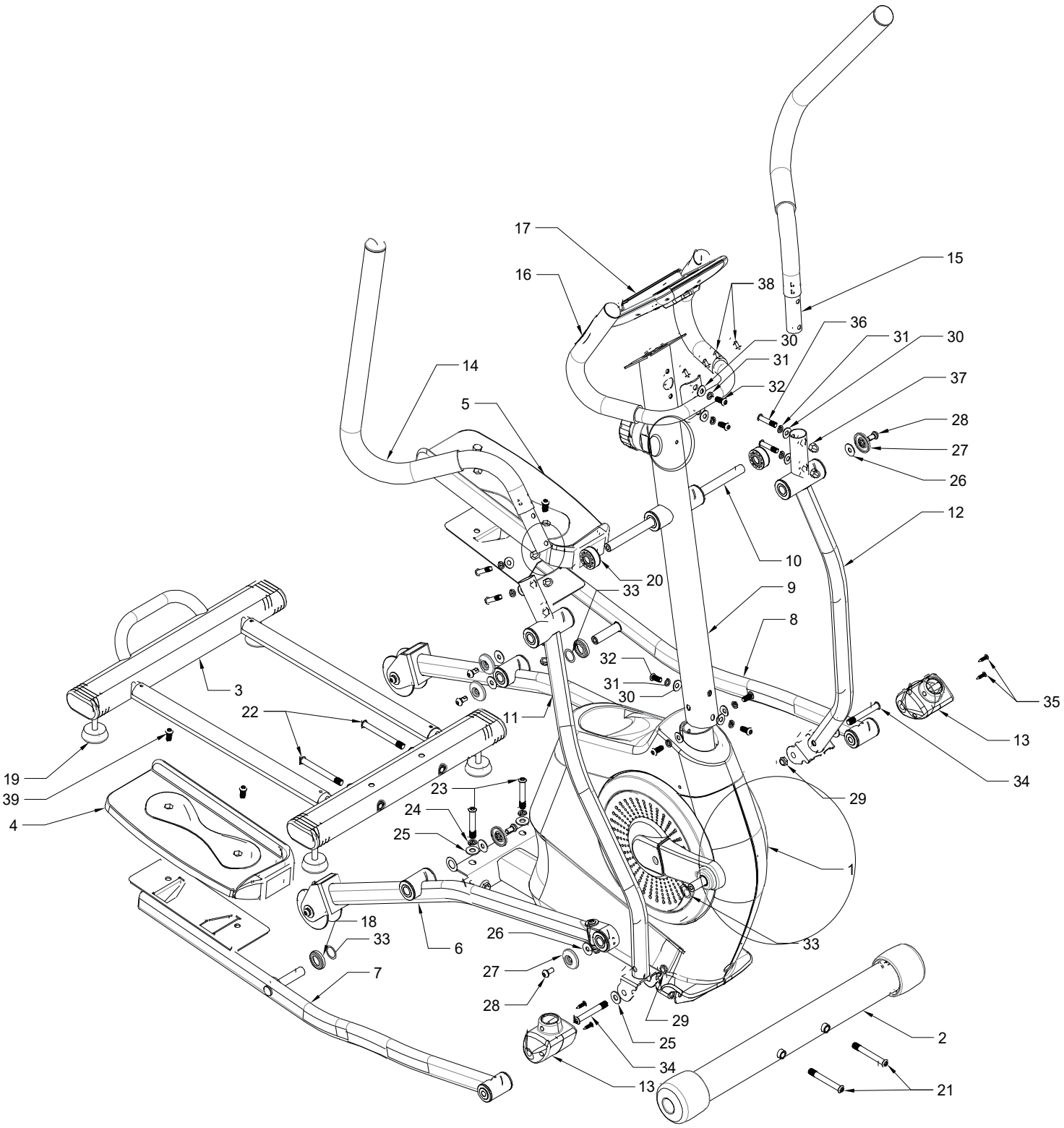
17
16
15
38
36
30
31
30
31
32
37
14
5
28
27
26
12
10
20
33
9
8
32
31
30
3
22
11
35
13
19
39
4
23
24
25
34
29
1
18
33
6
26
33
27
7
28
29
25
2
34
13
21

Key No.	Description	Qty.	Key No.	Description	Qty
1	Frame	1	21	M10 x 80mm Screw	2
2	Front Stabilizer	1	22	M10 x 95mm Screw	2
3	Roller Rail	1	23	M10 x 60mm Screw	2
4	Right Pedal	1	24	M10 Elastic Washer	2
5	Left Pedal	1	25	M10 Washer	4
6	Roller Pivot Leg	2	26	M8 Washer	6
7	Right Pedal Arm	1	27	Pivot Cover	6
8	Left Pedal Arm	1	28	M8 x 14mm Screw	6
9	Upright	1	29	M10 Nut	2
10	Pivot Axle	1	30	M8 Curved Washer	13
11	Right Lower Arm	1	31	M8 Elastic Washer	13
12	Left Lower Arm	1	32	M8 x 20mm Screw	9
13	Lower Arm Cover	2	33	M16 Wave washer	4
14	Right Upper Arm	1	34	M10 x 75mm Screw	2
15	Left Upper Arm	1	35	M3 x 20mm Screw	4
16	Handlebar	1	36	M8 x 40mm Screw	4
17	Console	1	37	M8 Nut	4
18	Weld Spacer	2	38	M5 x 12mm Screw	4
19	Leveling Foot	4	39	M8 x 25mm Screw	4
20	Pivot Spacer	2			

6. FUNCTIONS OF THE MONITOR

Functional Buttons:

MODE	– Push down to select functions. – Push down to reset time、distance and calories for 2 seconds.
SET	– To set the values of time、distance and calories when not in scan mode.
RESET	– Push down to reset time、distance and calories.

Function And Operations:

1. SCAN: Press the "MODE" button to select the function to "TIME", at which time the "SCAN" words appear on the left of the monitor and monitor will rotate through all the 6 functions:time, speed, distance, calorie, odometer and pulse. Each display will be hold 6 seconds. In the process of cyclic display of Each function, press "MODE" button once to make the "SCAN" disappear in any function mode to display this function.If you want to return to "SCAN" again, press the "MODE" button to select the function to "TIME".In "SCAN" mode, the "SCAN" word on the left of the monitor flashes continuously.

2. TIME: Display the time from exercise start to end.

3. SPEED: Display current speed.

4. DISTANCE: Display the distances from exercise start to end.

5. ODOMETER: Monitor will display the total accumulated distance, after the battery is reinstalled, the value will return to zero.

6. CALORIES: Display the calories burned from exercise start to end.

7. PULSE: Measure the user's heart rate.Press the button to switch to the pulse function, and hold the two heartbeat sensors in both hands to measure the heart rate (If the computer has wireless heartbeat function, please wear the wireless heartbeat chest belt before measuring the pulse rate.). Remark: During the process of pulse measurement, because of the contact jamming, the measurement value may be higher than the virtual pulse rate during the first 2~3 seconds, then will return to normal level. The measurement value can not be regarded as the basis of medical treatment.

Target Training Settings:

This computer has three target training modes: time、distance and calories (when switching to the target function, if there is "SCAN" font flashing on the display, you need to press the "MODE" button again to make the "SCAN" font disappear before setting)

1. TIME

Target training mode: first press the "MODE" button to switch to the "TIME" function, and then press the "SET" button to set the target time (Press and hold the set button to speed up the setting). when it reaches the required time, stop the button. Then start to use the machine, and the display will start to count down. When the count down reaches zero, the time function flashes to indicate the completion of the training target. At this time, if you continue to train, the computer will automatically start to count up from zero.The time adjustment range is 0-99min.

2. DISTANCE

Target training mode: first press the "MODE" button to switch to the "DIST" function, and then press the "SET" button to set the target distance (Press and hold the set button to speed up the setting). when it reaches the required distance, stop the button. Then start to use the machine, and the display will start to count down. When the count down reaches zero, the distance function flashes to indicate the completion of the training target. At this time, if you continue to train, the computer will automatically start to count up from zero.The distance adjustment range is 0-99.9miles.

3. CALORIE

Target training mode: first press the "MODE" button to switch to the "CAL" function, and then press the "SET" button to set the target calorie (Press and hold the set button to speed up the setting). when it reaches the required calorie, stop the button. Then start to use the machine, and the display will start to count down. When the count down reaches zero, the calorie function flashes to indicate the completion of the training target. At this time, if you continue to train, the computer will automatically start to count up from zero.The calorie adjustment range is 0-999.9cal.

If you want to modify the target data after the setting process or completion, press "RESET" button directly to clear all settings, and then reset according to the previous description.

Note:
1. The monitor will automatically shut off if there is no signal received after 2 minutes.
2. The monitor will be auto powered on when starting to exercise push button signal in.
3. When you stop exercising for 4 seconds, the display will stop calculating and a ”STOP” will be displayed on the screen. When you start exercising, the display will automatically start calculating and the ”STOP” will disappear.

SPECIFICATIONS:

FUNCTION	SCAN	Every 6 seconds
	TIME	0:00~99:59
	SPEED	0.0~99.9 MILE/H
	DISTANCE	0.00~99.99 MILE
	ODOMETER	0 ~ 9999 MILE
	CALORIES	0.0~999.9 CAL
	PULSE	60~240 BPM
BATTERY TYPE		2pcs of SIZE –AA
OPERATING TEMPERATURE		0°C ~ +40°C
STORAGE TEMPERATURE		-10°C ~ +60°C

7. APP INSTRUCTIONS

1.Functions of the bluetooth:

1.1 To ensure the data record is real and effective at the cell-phone end, the wireless transmitter records and sends the data of the user to cell-phone APP only when Bluetooth computer and the cell-phone are connected. First connect the APP to the Bluetooth computer before starting the sports equipment to ensure the trueness and effectiveness of the data recorded in cell-phone APP.

1.2 The computer will go into Sleep mode if it receives no signal input in 2 minutes. In Sleep mode, computer is unavailable for cell-phone. At this time, consumers need to press the button to wake up the computer.

1.3 The Bluetooth of the computer is off by default. Before connecting the app, please press any button of the computer to turn on the Bluetooth.

1.4 If no app is connected within 60 seconds after Bluetooth is turned on, and the button is not pressed, the Bluetooth of the computer will be turned off again.

1.5 When the computer is successfully connected to the app, the computer will turn off the display and all data will be displayed on the app.

1.6 After connecting the app, if you need to reuse the computer, you need to exit the app and turn off the Bluetooth of the mobile phone.

2. App operating instructions :(note: the "kinomap" and "zwift" "fit-show" software will be updated in real time, and this operation process is only for reference.)

2.1 Description of KINOMAP connection:

2.1.1 Search "KINOMAP" in mobile app store to download app.

2.1.2 After the download is completed, open the app and register the personal information. Turn on the Bluetooth of the mobile phone to ensure that the computer is powered on and in the wake-up state.

2.1.3 Add sports equipment as follows:

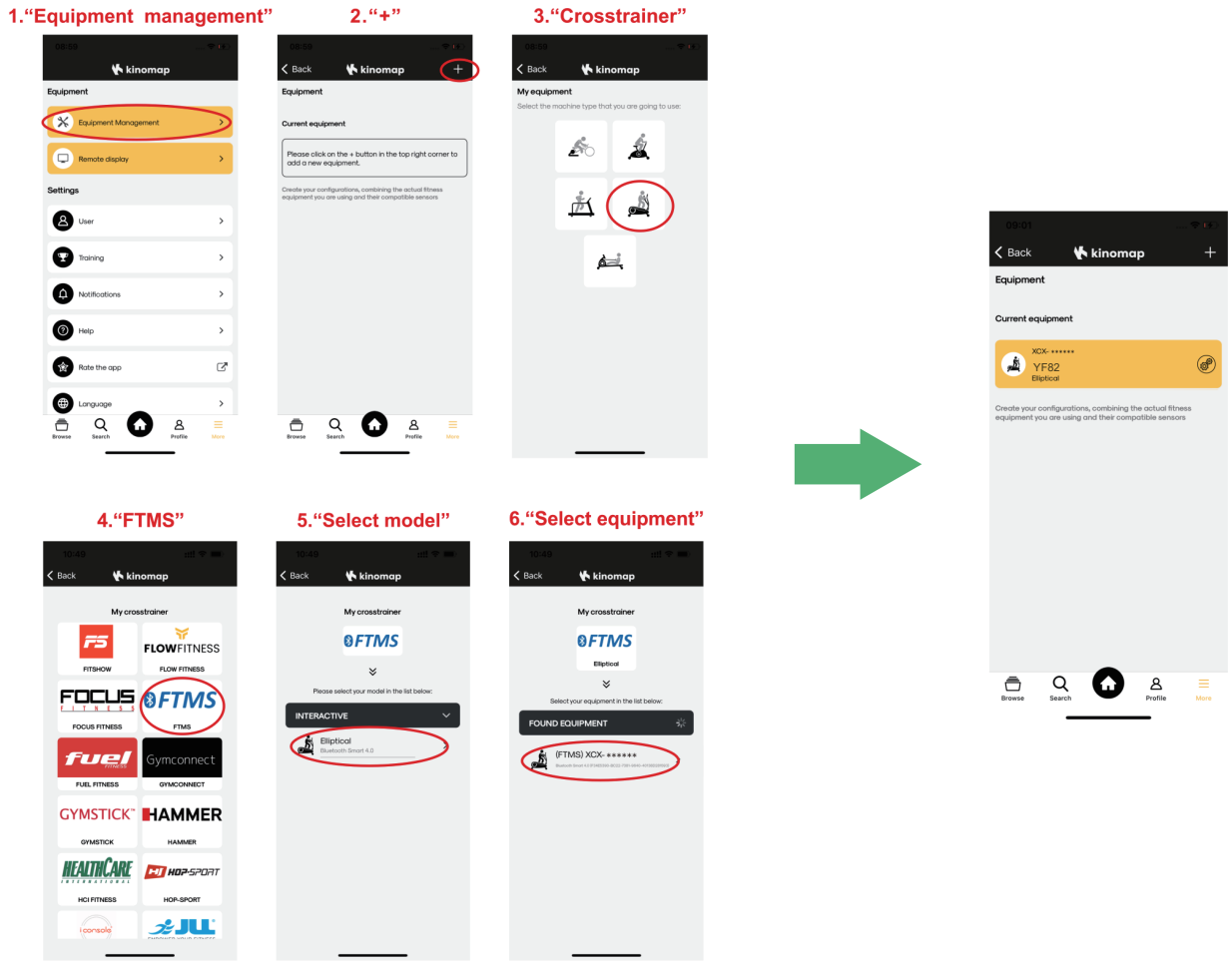

2.1.4 Add equipment to complete, start your exercise!

2.2 Description of Zwift connection

2.2.1 Search "Zwift" in mobile app store to download app:

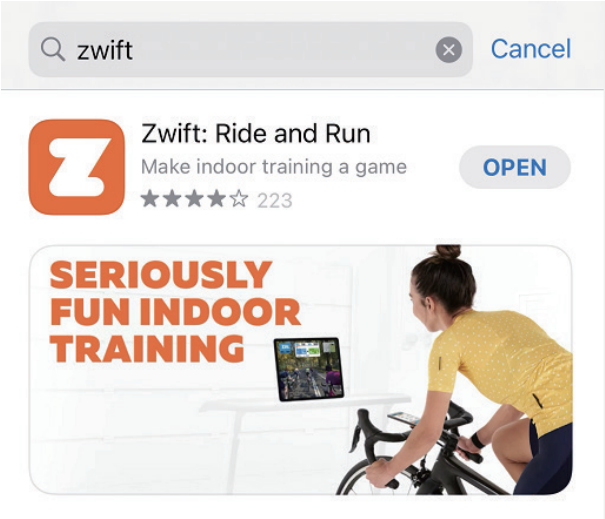

2.2.2 After the download is completed, open the app and register the personal information. Turn on the Bluetooth of the mobile phone to ensure that the computer is powered on and in the wake-up state.

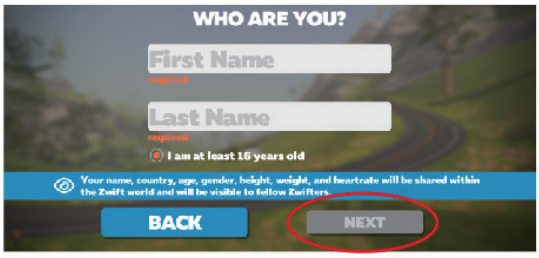

2.2.3 Connect the sports equipment as follows:

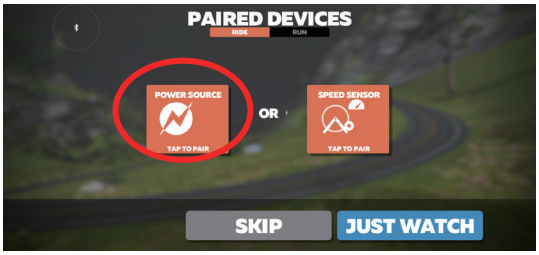

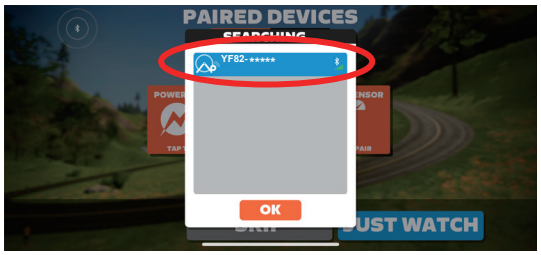

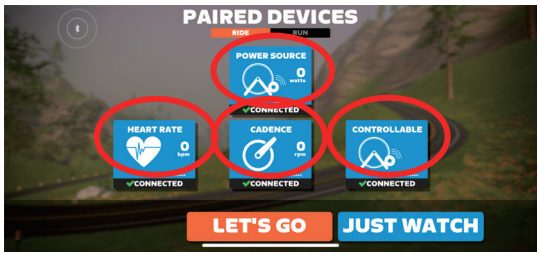

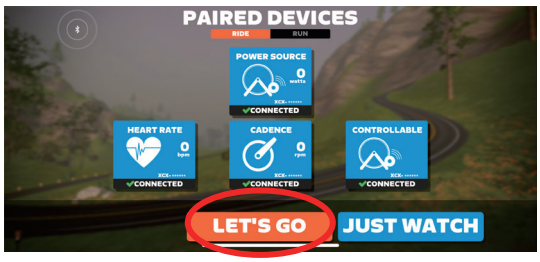

2.2.4 The connection to the device has been completed. Select your favorite scene to start the exercise!

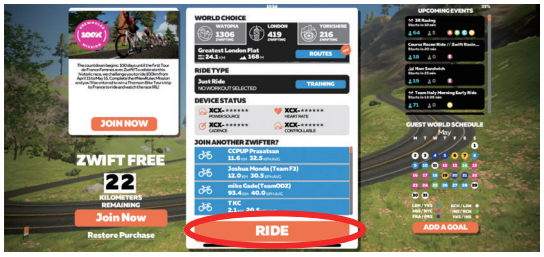

2.3 Description of FITSHOW connection:

Open FITSHOW APP. Before creating an account, be sure to read the Terms of Use and Privacy Policy.

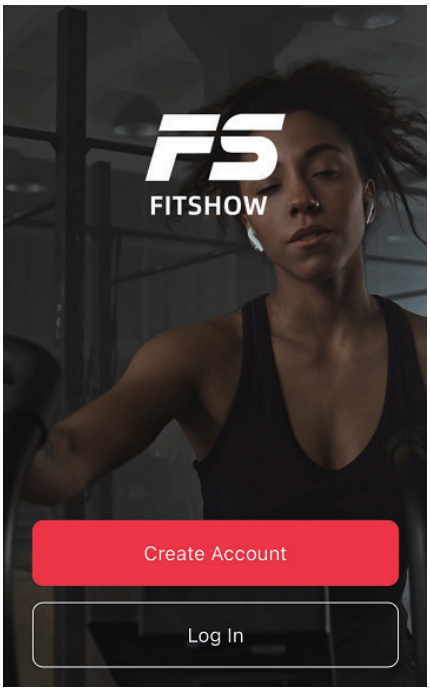

Create an account:
a. Select Create Account/Sign Up/Register if you haven't already had an account.
Click LOGIN if you are an existing user of those apps.
b. Enter phone number/email address and password you'd like to use.
c. Once you have logged into your account, complete your personal details. This information personalizes your experience and improves the accuracy of your calorie burn and distance data. You can adjust your privacy settings under Settings in the app.

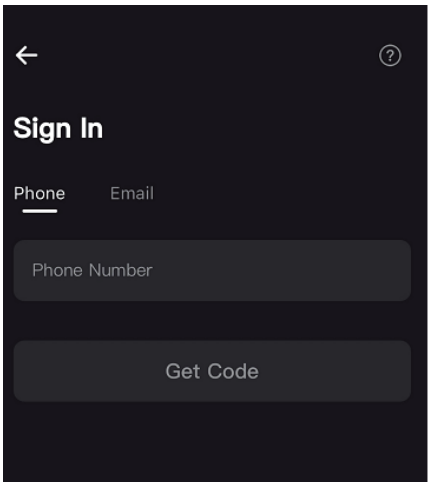

After login your account, you can connect to the Elliptical Machine.
Step 1: Select device type: **Elliptical Trainer**
Step 2: Click Quick Start and connect the device: **YF82**

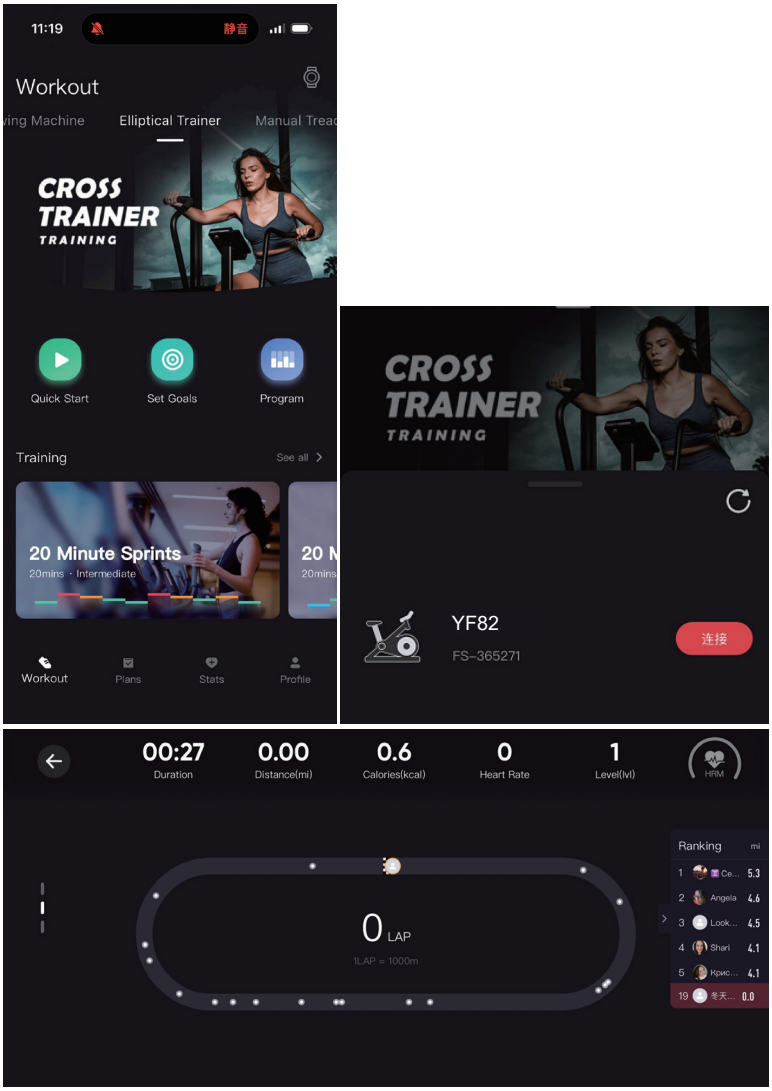

MADE IN CHINA

FCC Warning Statement

Changes or modifications not expressly approved by the party responsible for compliance could void the user's authority to operate the equipment. This equipment has been tested and found to comply with the limits for a Class B digital device, pursuant to Part 15 of the FCC Rules. These limits are designed to provide reasonable protection against harmful interference in a residential installation. This equipment generates uses and can radiate radio frequency energy and, if not installed and used in accordance with the instructions, may cause harmful interference to radio communications. However, there is no guarantee that interference will not occur in a particular installation. If this equipment does cause harmful interference to radio or television reception, which can be determined by turning the equipment off and on, the user is encouraged to try to correct the interference by one or more of the following measures:

- Reorient or relocate the receiving antenna.
- Increase the separation between the equipment and receiver.
- Connect the equipment into an outlet on a circuit different from that to which the receiver is connected.
- Consult the dealer or an experienced radio/TV technician for help.

FCC Radiation Exposure Statement

The device has been evaluated to meet general RF exposure requirement. The device can be used in portable exposure condition without restriction.

This device complies with Part 15 of the FCC Rules. Operation is subject to the following two conditions:

(1)This device may not cause harmful interference.

(2)This device must accept any interference received, including interference that may cause undesired operation.