PARTIAL Test Report
24-1-0047701T001-TR1-R02

Number of pages:	28	**Date of Report:**	2024-Aug-26
Testing company:	cetecom advanced GmbH Untertuerkheimer Str. 6-10 66117 Saarbruecken GERMANY	**Applicant:**	RAFI GmbH & Co. KG
Product: **Model:**	**BLE low energy MCU** **Assembly Bluetooth Modul**		
FCC ID:	2BESPSCU101916	**IC:**	32248-101916SCUNA
Testing has been carried out in accordance with:	**FCC Regulations** **Title 47 CFR, Chapter I** **Subpart C Intentional Radiators** **§ 15.247 Operation within the bands 2400-2483.5 MHz** **ISED-Regulations** **Radio Standards Specification** **RSS-Gen, Issue 5** **General Requirements for Compliance of Radio Apparatus** **RSS-247, Issue 3** **Digital Transmission Systems (DTSs)**		
Tested Technology:	BLE		
Test Results:	**☒ The EUT complies with the requirements in respect of selected parameters subject to the test.** The test results relate only to devices specified in this document The current version of Test Report 24-1-0047701T001_TR1_R02 replaces the test report 24-1-0047701T001_TR1_R01 dated 2024-Jul-26. The replaces test report is herewith invalid.		
Signatures:			

B.Eng. Martin Nunier	Salih Öztan
Supervisor Radio Services	Testing Manager
Authorization of test report	Responsible of test report

Table of Contents

Table of Annex 3
1 General information 4
1.1 Disclaimer and Notes 4
1.2 Attestation 4
1.3 Summary of Test Results 5
1.4 Summary of Test Methods 6
2 Administrative Data 7
2.1 Identification of the Testing Laboratory 7
2.2 General limits for environmental conditions 7
2.3 Test Laboratories sub-contracted 7
2.4 Organizational Items 7
2.5 Applicant's details 7
2.6 Manufacturer's details 7
2.7 Equipment under Test (EUT) 8
2.8 Untested Variant (VAR) 8
2.9 Auxiliary Equipment (AE) 8
2.10 Connected cables (CAB) 8
2.11 Software (SW) 8
2.12 EUT set-ups 8
2.13 EUT operation modes 9
3 Equipment under test (EUT) 10
3.1 General Data of Main EUT as Declared by Applicant 10
3.2 Detailed Technical data of Main EUT as Declared by Applicant 10
3.3 Modifications on Test sample 10
4 Measurements 11
4.1 Peak output power (Sweep) 11
4.2 Radiated field strength emissions below 30 MHz 13
4.3 Radiated field strength emissions 30 MHz – 1 GHz 17
4.4 Radiated field strength emissions above 1 GHz 19
4.5 Radiated Band-Edge emissions 22
4.6 Equipment lists 24
5 Results from external laboratory 26
6 Opinions and interpretations 26
7 List of abbreviations 26
8 Measurement Uncertainty valid for conducted/radiated measurements 27
9 Versions of test reports (change history) 28

Table of Annex			
Annex No.	**Contents**	**Reference Description**	**Total Pages**
Annex 1	Test result diagrams	**24-1-0047701T001_TR1-A201-R02**	22
Annex 2	Internal photographs of EUT	**Will be provided by customer**	--
Annex 3	External photographs of EUT	**24-1-0047701T001_TR1-A101-R01**	4
Annex 4	Test set-up photographs	**24-1-0047701T001_TR1-A103-R01**	7
The listed attachments are separate documents.			

1 General information

1.1 Disclaimer and Notes

The test results of this test report relate exclusively to the test item specified in this test report as specified in chapter 2.7. cetecom advanced does not assume responsibility for any conclusions and generalizations drawn from the test results with regard to other specimens or samples of the type of the equipment represented by the test item.
The test report may only be reproduced or published in full. Reproduction or publication of extracts from the report requires the prior written approval of cetecom advanced.
The testing service provided by cetecom advanced has been rendered under the current "General Terms and Conditions for cetecom advanced".
cetecom advanced will not be liable for any loss or damage resulting from false, inaccurate, inappropriate or incomplete product information provided by the customer.
Under no circumstances does the cetecom advanced test report include any endorsement or warranty regarding the functionality, quality or performance of any other product or service provided.
Under no circumstances does the cetecom advanced test report include or imply any product or service warranties from cetecom advanced, including, without limitation, any implied warranties of merchantability, fitness for purpose, or non-infringement, all of which are expressly disclaimed by cetecom advanced.
All rights and remedies regarding vendor's products and services for which cetecom advanced has prepared this test report shall be provided by the party offering such products or services and not by cetecom advanced.
In no case this test report can be considered as a Letter of Approval.

This test report is electronically signed and valid without handwritten signature. For verification of the electronic signatures, the public keys can be requested at the testing laboratory.

The test report must always be reproduced in full; reproduction of an excerpt only is subject to written approval of the testing laboratory. The documentation of the testing performed on the tested devices is archived for 10 years at cetecom advanced.

Also we refer on special conditions which the applicant should fulfill according §2.927 to §2.948, special focus regarding modification of the equipment and availability of sample equipment for market surveillance tests.

1.2 Attestation

I declare that all measurements were performed by me or under my supervision and that all measurements have been performed and are correct to my best knowledge and belief to Industry Canada standards. All of the above requirements are met in accordance with enumerated standards.

1.3 Summary of Test Results

The EUT integrates a BLE transmitter. Other implemented wireless technologies were not considered within this test report.

Test case	Reference Clause FCC ☒	Reference Clause ISED ☒	Page	Remark	Result
Duty-Cycle	§15.35(c)	RSS-Gen Issue 5, §8.2	--	--	NP
Minimum Emission Bandwidth 6 dB	§15.247 5.2(a)	RSS-247, Issue 3, §5.2(a) RSS-Gen Issue 5,: §6.7	--	--	NP
Occupied Channel Bandwidth 99%	2.1049(h)	RSS-Gen Issue 5, §6.7	--	--	NP
Peak output power (Sweep)	§15.247(b)(3)	RSS-247, Issue 3, §5.4(d)	11	--	PASSED
Transmitter Peak output power radiated	§15.247(b)(4)(c)(i)	RSS-247, Issue 3, §5.4(d)	--	--	NP
Emissions in non-restricted frequency bands	§15.247(d)	RSS-247, Issue 3, §5.5	--	--	NP
Radiated Band-Edge emissions	§15.205(b) §15.247(d)	RSS-Gen: Issue 5 §8.9, §8.10 RSS-247, Issue 3, §5.5	22	--	PASSED
Power spectral density	§15.247(e)	RSS-247, Issue 3, §5.2(b)	--	--	NP
Radiated field strength emissions below 30 MHz	§15.205(a) §15.209(a)	RSS-Gen: Issue 5 §8.9 Table 6	13	--	PASSED
Radiated field strength emissions 30 MHz – 1 GHz	§15.209 §15.247(d)	RSS-Gen: Issue 5 §8.9 Table 5 RSS-247, Issue 3, §5.5	17	--	PASSED
Radiated field strength emissions above 1 GHz	§15.209(a) §15.247(d)	RSS-Gen: Issue 5: §8.9 Table 5+7 RSS-247, Issue 3, §5.5	19	--	PASSED
AC-Power Lines Conducted Emissions	§15.207	RSS-Gen Issue 5: §8.8 Table 4	--	--	NP

PASSED	The EUT complies with the essential requirements in the standard.
FAILED	The EUT does not comply with the essential requirements in the standard.
N/A	Test case does not apply to the test object.
NP	The test was not performed by the cetecom advanced laboratory.

Decision Rule: cetecom advanced GmbH follows ILAC G8:2019 chapter 4.2.1 (Simple Acceptance Rule).

Remarks:

- Please check the module report "RF181120C09D-2" for not performed measurements by the cetecom advanced GmbH laboratory.

1.4 Summary of Test Methods

Test case	Test method
Duty-Cycle	ANSI C63.10:2013, §11.6(b)
Minimum Emission Bandwidth 6 dB	ANSI C63.10:2013, §6.9.2, §11.8
Occupied Channel Bandwidth 99%	ANSI C63.10:2013, §6.9.3
Peak output power (Sweep)	ANSI C63.10:2013, §11.9
Power spectral density	ANSI C63.10:2013, §11.10
Emissions in non-restricted frequency bands	ANSI C63.10:2013, §11.11, §6.10.5
Radiated Band-Edge emissions	ANSI C63.10-2013; “Marker-Delta method”, §6.10.5, §11.13
Transmitter Peak output power radiated	Result calculated with measured conducted RF-power value and stated/measured antenna gain for band of interest
Radiated field strength emissions below 30 MHz	ANSI C63.10-2013 §6.3, §6.4
Radiated field strength emissions 30 MHz- 1 GHz	ANSI C63.4-2014 §8.2.3, ANSI C63.10-2013 §6.3, §6.5
Radiated field strength emissions above 1 GHz	ANSI C63.4-2014 §8.3, ANSI C63.10-2013 §6.3, §6.6
AC-Power Lines Conducted Emissions	ANSI C63.4-2014 §7, ANSI C63.10-2013 §6.2

And reference also to Test methods in KDB558074

2 Administrative Data

2.1 Identification of the Testing Laboratory

Company name:	cetecom advanced GmbH
Address:	Untertuerkheimer Str. 6-10 66117 Saarbruecken Germany
Responsible for testing laboratory:	Dipl.-Ing. (FH) Andreas Luckenbill M.Sc.
Accreditation scope:	**DAkkS Webpage: FCC ISED**
IC Lab company No. / CAB ID:	3462D / DE0001
Test location 1:	Im Teelbruch 116; 45219 Essen
Test location 2:	--

2.2 General limits for environmental conditions

Temperature:	22±2 °C
Relative. humidity:	45±15% rH

2.3 Test Laboratories sub-contracted

Company name:	--

2.4 Organizational Items

Responsible testing manager:	Salih Öztan
Receipt of EUT:	2024-May-28
Date(s) of test:	2024-Jun-13 to 2024-Jun-24
Version of template:	24.0301

2.5 Applicant's details

Applicant's name:	RAFI GmbH & Co. KG
Address:	Ravensburger Str. 128-134 88276 Berg Baden-Wuerttemberg Germany
Contact Person:	Markus Frankenhauser
Contact Person's Email:	Markus.Frankenhauser@rafi-group.com

2.6 Manufacturer's details

Manufacturer's name:	RAFI GmbH & Co. KG
Address:	Ravensburger Str. 128-134 88276 Berg Germany

2.7 Equipment under Test (EUT)

EUT No.*)	Sample No.	Product	Model	Type	SN	HW	SW	HVIN	PMN
EUT 1	24-1-00477S01_C01	BLE low energy MCU	Assembly Bluetooth Modul	-	N/A	05	0.7.0	5930316650000	NINA-B301
EUT 2	24-1-00477S02_C01	BLE low energy MCU	Assembly Bluetooth Modul	-	N/A	05	0.7.0	5930316650000	NINA-B301
EUT 3	24-1-00477S06_C01	BLE low energy MCU	Assembly Bluetooth Modul	-	N/A	05	0.7.0	5930316650000	NINA-B301

*) EUT short description is used to simplify the identification of the EUT in this test report.

2.8 Untested Variant (VAR)

VAR No.*)	Sample No.	Product	Model	Type	SN	HW	SW

*) The listed additional untested model variant(s) (VAR) is/are not object of evaluation of compliance. For further information please see Annex 5: Declaration of applicant of model differences.
If the table above does not show any other line than the headline, no untested variants are available.

2.9 Auxiliary Equipment (AE)

AE No.*)	Sample No.	Auxiliary Equipment	Model	SN	HW	SW
AE 1	24-1-00477S03_C01	Antenna	Class 2 Permissive Change	N/A	N/A	N/A

*) AE short description is used to simplify the identification of the auxiliary equipment in this test report. If the table above does not show any other line than the headline, no AE was used during testing nor was taken into account for evaluation

2.10 Connected cables (CAB)

CAB No.*)	Sample No.	Cable Type	Connectors / Details	Length
CAB 1	24-1-00477S07_C01	Connection Power Cable	-	< 300 cm

*) CAB short description is used to simplify the identification of the connected cables in this test report. If the table above does not show any other line than the headline, no cable was used during testing nor was taken into account for evaluation

2.11 Software (SW)

SW No.*)	Sample No.	SW Name	Description	SW Status

*) SW short description is used to simplify the identification of the used software in this test report. If the table above does not show any other line than the headline, no SW was used during testing nor was taken into account for evaluation.

2.12 EUT set-ups

set-up no.*)	Combination of EUT and AE	Description
1	EUT 2 + AE 1 + CAB 1	Used for radiated measurements
2	EUT 3 + AE 1 + CAB 1	Used for radiated measurements
3	EUT 1 + AE 1 + CAB 1	Used for radiated measurements

*) EUT set-up no. is used to simplify the identification of the EUT set-up in this test report.

2.13 EUT operation modes

EUT operating mode no.*)	Operating modes	Additional information
op. 1	BLE_TX-Mode	With help of special test firmware TX-mode was set-up. We refer to applicants information/papers for details about necessary commands.

*) EUT operating mode no. is used to simplify the test report.

3 Equipment under test (EUT)

3.1 General Data of Main EUT as Declared by Applicant

Firmware	☐ for normal use	☒ Special version for test execution	
Power supply	☐ AC Mains	-	
	☒ DC Mains	**12 V DC**	
	☐ Battery	-	
Operational conditions	T_{nom} = +21 °C	T_{min} = N/A	T_{max} = N/A
EUT sample type	**Pre-Production**		
Weight	0.155 kg		
Size [LxWxH]	19.0 cm x 14.0 cm x 2.0 cm		
Interfaces/Ports	-		
For further details refer Applicants Declaration & following technical documents			
For further details regarding radio parameters, please refer to Bluetooth Core Specification			

3.2 Detailed Technical data of Main EUT as Declared by Applicant

Frequency Band	2.4 GHz ISM Band (2400 MHz - 2483.5 MHz)	
Number of Channels (USA/Canada -bands)	40 (37 Hopping + 3 Advertising)	
Nominal Channel Bandwidth	2 MHz	
Type of Modulation | Data Rate	☒ GFSK **|** 1 Mbit/s	☐ GFSK **|** 2 Mbit/s
	☐ GFSK **|** 500 kbit/s	☐ GFSK **|** 125 kbit/s
Other wireless options	☐ a/n/ac mode ☐ b/g/n mode ☐ Bluetooth EDR (not tested within this report) ☐ Cellular transceiver (2G/3G/4G/5G/GPS, not tested in this report)	
Max. Conducted Output Power	GFSK **3.9** dBm	
EIRP Power (Calculated EIRP)	GFSK **3.9** dBm + **2.6** dBi = **6.5** dBm	
Antenna Type	Omni-Directional	
Antenna Gain	**2.6** dBi	
FCC label attached	No	
Test firmware / software and storage location	EUT 1, EUT 2, EUT 3	
For further details refer Applicants Declaration & following technical documents		

Description of Reference Document (supplied by applicant)	Version	Total Pages
--	--	--

3.3 Modifications on Test sample

Additions/deviations or exclusions	--

4 Measurements

4.1 Peak output power (Sweep)

4.1.1 Description of the general test setup and methodology, see below example:

The EUT's RF-signal is coupled out by a suitable antenna coupling connector (1). The signal is first attenuated (2) then connected to power meter (3) or spectrum-analyzer (4) for RF-conducted measurements. The specific attenuation loss is determined prior to the measurement within a set-up attenuation measurement. These are then taken into account by correcting the measurement readings.

Schematic:

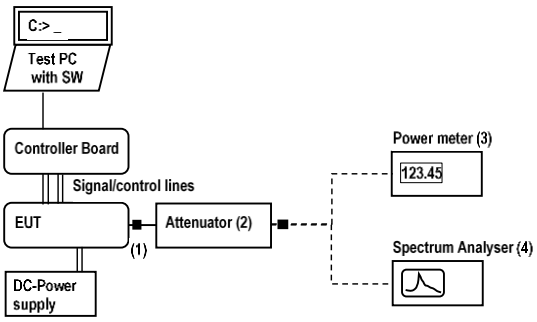

Testing method:

The measurement is made according to relevant reference clauses:
(See Tables *Summary of Test Results* and *Summary of Test Methods* on page 5)

Measurement is made using Rohde & Schwarz TS8997 test system.

Test method	AVGSA-2 / AVGSA-2 alternative (duty-cycle < 98%, constant)
Remarks	--

The measurement was performed in non-hopping transmission mode with the carrier set to lowest/middle and highest channel.

EUT settings
The EUT was instructed to send with maximum power (if adjustable) according applicants instructions.
Different modulation characteristics have been checked, e.g. data rates which EUT can operate

4.1.2 Measurement Location

Test site	120910 - Radio Laboratory 1 (TS 8997)

4.1.3 Limit

Frequency Range [MHz]	Limit [W]	Limit [dBm]	Detector	RBW / VBW [MHz]
2400 - 2483.5	1	30	MaxPeak	3 / 10

4.1.4 Result

Mode	Channel	Frequency [MHz]	Max Peak Power [dBm]	Result
op.1	0	2402	3.9	Passed
op.1	17	2440	3.9	Passed
op.1	39	2480	3.8	Passed

Remark: for more information and graphical plot see annex A1 **24-1-0047701T001_TR1-A201-R02**

4.2 Radiated field strength emissions below 30 MHz

4.2.1 Description of the general test setup and methodology, see below example:

Evaluating the radiated field emissions are done first by an exploratory emission measurement and a final measurement for most critical frequencies determined.

The loop antenna was placed at 1 m height above ground plane and 3 m measurement distance from set-up for investigations. Because of reduced measurement distance, correction data were applied, as stated in chapter "General Limit - Radiated field strength emissions below 30 MHz". The tests are performed in the semi anechoic room recognized by the regulatory commission.

Schematic:

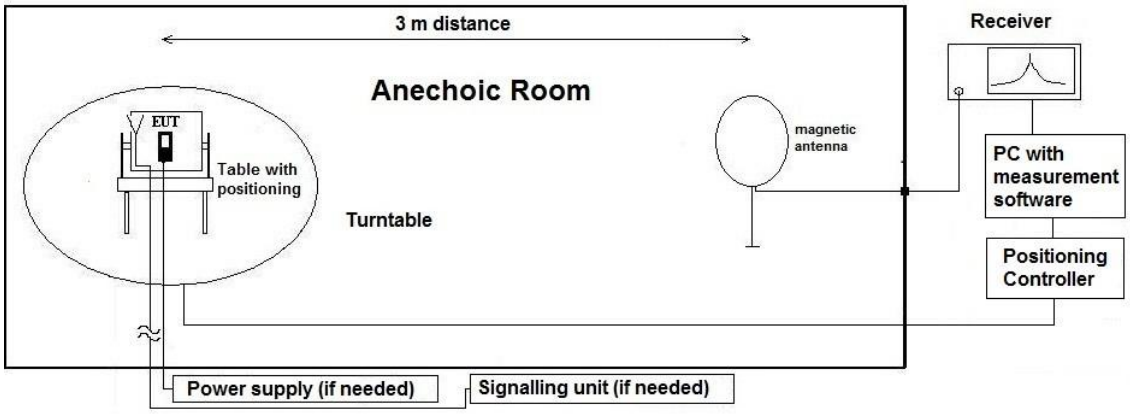

Testing method:

The measurement is made according to relevant reference clauses:
(See Tables *Summary of Test Results* and *Summary of Test Methods* on page 5)

Exploratory, preliminary measurements
The EUT and its associated accessories are placed on a non-conductive position manipulator (tipping device) of 0.8 m height which is placed on the turntable. By rotating the turntable (step 90°, range 0°to 360°) and the EUT itself either on 3-orthogonal axis (portable equipment) or 2-orthogonal axis (defined operational position of EUT), the emission spectrum was recorded.

The loop antenna was moved at least to 2-perpendicular axes (antenna vector in direction of EUT and parallel to EUT) in order to maximize the emissions. The results are documented in a diagram. Critical frequencies (low margin to limit) are saved within a data reduction table for further investigations. If various operating modes are supported, further investigations are made to find the worst-case. Also the interconnection cables and equipment position were varied in order to maximize the emissions.

Final measurement on critical frequencies
Based on the exploratory measurements, the most critical frequencies are re-measured by maintaining the EUT's worst-case operation mode, cable position, etc.

First a frequency zoom around the critical frequency is done to locate the frequency more precisely. After this step, for all identified critical frequencies, the maximum peak was determined.

Following parameters were varied: the turntable angle continuously in the range 0 to 360 degree, the EUT itself either over 3-orthogonal axis (not defined usage position) or 2-orthogonal axis (defined usage position).

On the determined worst-case position, a final measurement with necessary bandwidth and detector according standard has been carried out.

Formula:

$E_C = E_R + AF + C_L + D_F - G_A$

$M = L_T - E_C$

AF = Antenna factor
C_L = Cable loss
D_F = Distance correction factor (if used)
E_C = Electrical field – corrected value
E_R = Receiver reading
G_A = Gain of pre-amplifier (if used)
L_T = Limit
M = Margin

All units are dB-units, positive margin means value is below limit.

4.2.2 Sample calculation

Raw-Value [dBuV/m]	Antenna factor	Distance Correction [dB]	Cable Loss	Preamplifier	Resulting correction value [dB]	Final result [dBuV/m]	Remarks
19.83	18.9	-70.75	0.18	--	-51.67	-31.83	30 to 3 m correction used according ANSI C63.10-2013

Remark: This calculation is based on an example value at 458 kHz

4.2.3 Measurement Location

Test site	120901 - SAC3 - Radiated Emission <1GHz

4.2.4 Correction factors due to reduced meas. distance (f < 30 MHz):

The used correction factors when the measurement distance is reduced compared to regulatory measurement distance, are calculated according Extrapolation formulas valid for EUT's with maximum dimension of 0.625xLambda. Formula 2+3+4 as presented in ANSI C63.10, Chapter 6.4.4 are used for the calculations of proper extrapolation factors

Frequency Range	f [kHz/MHz]	Lambda [m]	Far-Field Point [m]	Distance Limit accord. 15.209 [m]	1st Condition (dmeas < Dnear-field)	2nd Condition (Limit distance bigger dnear-field)	Distance Correction accord. Formula
kHz	9	33333.33	5305.17	300	fullfilled	not fullfilled	-80.00
	10	30000.00	4774.65		fullfilled	not fullfilled	-80.00
	20	15000.00	2387.33		fullfilled	not fullfilled	-80.00
	30	10000.00	1591.55		fullfilled	not fullfilled	-80.00
	40	7500.00	1193.66		fullfilled	not fullfilled	-80.00
	50	6000.00	954.93		fullfilled	not fullfilled	-80.00
	60	5000.00	795.78		fullfilled	not fullfilled	-80.00
	70	4285.71	682.09		fullfilled	not fullfilled	-80.00
	80	3750.00	596.83		fullfilled	not fullfilled	-80.00
	90	3333.33	530.52		fullfilled	not fullfilled	-80.00
	100	3000.00	477.47		fullfilled	not fullfilled	-80.00
	125	2400.00	381.97		fullfilled	not fullfilled	-80.00
	200	1500.00	238.73		fullfilled	fullfilled	-78.02
	300	1000.00	159.16		fullfilled	fullfilled	-74.49
	400	750.00	119.37		fullfilled	fullfilled	-72.00
	490	612.24	97.44		fullfilled	fullfilled	-70.23
	500	600.00	95.49	30	fullfilled	not fullfilled	-40.00
	600	500.00	79.58		fullfilled	not fullfilled	-40.00
	700	428.57	68.21		fullfilled	not fullfilled	-40.00
	800	375.00	59.68		fullfilled	not fullfilled	-40.00
	900	333.33	53.05		fullfilled	not fullfilled	-40.00
MHz	1.00	300.00	47.75		fullfilled	not fullfilled	-40.00
	1.59	188.50	**30.00**		fullfilled	not fullfilled	-40.00
	2.00	150.00	23.87		fullfilled	fullfilled	-38.02
	3.00	100.00	15.92		fullfilled	fullfilled	-34.49
	4.00	75.00	11.94		fullfilled	fullfilled	-32.00
	5.00	60.00	9.55		fullfilled	fullfilled	-30.06
	6.00	50.00	7.96		fullfilled	fullfilled	-28.47
	7.00	42.86	6.82		fullfilled	fullfilled	-27.13
	8.00	37.50	5.97		fullfilled	fullfilled	-25.97
	9.00	33.33	5.31		fullfilled	fullfilled	-24.95
	10.00	30.00	4.77		fullfilled	fullfilled	-24.04
	10.60	28.30	4.50		fullfilled	fullfilled	-23.53
	11.00	27.27	4.34		fullfilled	fullfilled	-23.21
	12.00	25.00	3.98		fullfilled	fullfilled	-22.45
	13.56	22.12	3.52		fullfilled	fullfilled	-21.39
	15.00	20.00	3.18		fullfilled	fullfilled	-20.51
	15.92	18.85	**3.00**		fullfilled	fullfilled	-20.00
	17.00	17.65	2.81		not fullfilled	fullfilled	-20.00
	18.00	16.67	2.65		not fullfilled	fullfilled	-20.00
	20.00	15.00	2.39		not fullfilled	fullfilled	-20.00
	21.00	14.29	2.27		not fullfilled	fullfilled	-20.00
	23.00	13.04	2.08		not fullfilled	fullfilled	-20.00
	25.00	12.00	1.91		not fullfilled	fullfilled	-20.00
	27.00	11.11	1.77		not fullfilled	fullfilled	-20.00
	29.00	10.34	1.65		not fullfilled	fullfilled	-20.00
	30.00	10.00	1.59		not fullfilled	fullfilled	-20.00

4.2.5 Limit

Radiated emissions limits, (3 meters)					
Frequency Range [MHz]	Limit [µV/m]	Limit [dBµV/m] *	Distance [m]	Detector	RBW [kHz]
0.009 – 0.09	2400 / f [kHz]	67.6 – 20Log(f) (kHz)	300	Pk & Avg	0.2
0.09 – 0.11	2400 / f [kHz]	67.6 – 20Log(f) (kHz)	300	Quasi peak	0.2
0.11 – 0.15	2400 / f [kHz]	67.6 – 20Log(f) (kHz)	300	Pk & Avg	0.2
0.15 – 0.49	2400 / f [kHz]	67.6 – 20Log(f) (kHz)	300	Pk & Avg	9
0.49 – 1.705	24000 / f [kHz]	87.6 – 20Log(f) (kHz)	30	Quasi peak	9
1.705 - 30	30	29.5	30	Quasi peak	9

*Remark: In Canada same limits apply, just unit reference is different

4.2.6 Result

Diagram	Channel	Mode	Maximum Level [dBµV/m] Frequency Range 0.009 – 30 MHz	Result
2.01	0	GFSK | 1Mbit	No critical peaks found	Passed
2.02	0	GFSK | 1Mbit	No critical peaks found	Passed
2.03	17	GFSK | 1Mbit	No critical peaks found	Passed
2.04	39	GFSK | 1Mbit	No critical peaks found	Passed

Remark: for more information and graphical plot see annex A1 **24-1-0047701T001_TR1-A201-R02**

4.3 Radiated field strength emissions 30 MHz – 1 GHz

4.3.1 Description of the general test setup and methodology, see below example:

Evaluating the emissions have to be done first by an exploratory emissions measurement and a final measurement for most critical frequencies. The tests are performed in a CISPR 16-1-4:2010 compliant semi anechoic room (SAR) and fully anechoic room (FAR) recognized by the regulatory commission. The measurement distance was set to 3 meter for frequencies up to 18 GHz and 2 meter above 18 GHz. A logarithmic periodic antenna is used for the frequency range 30 MHz to 1 GHz. Horn antennas are used for frequency range 1 GHz to 40 GHz. The EUT is aligned within 3 dB beam width of the measurement antenna with three orthogonal axis measurements on the EUT.

Schematic:

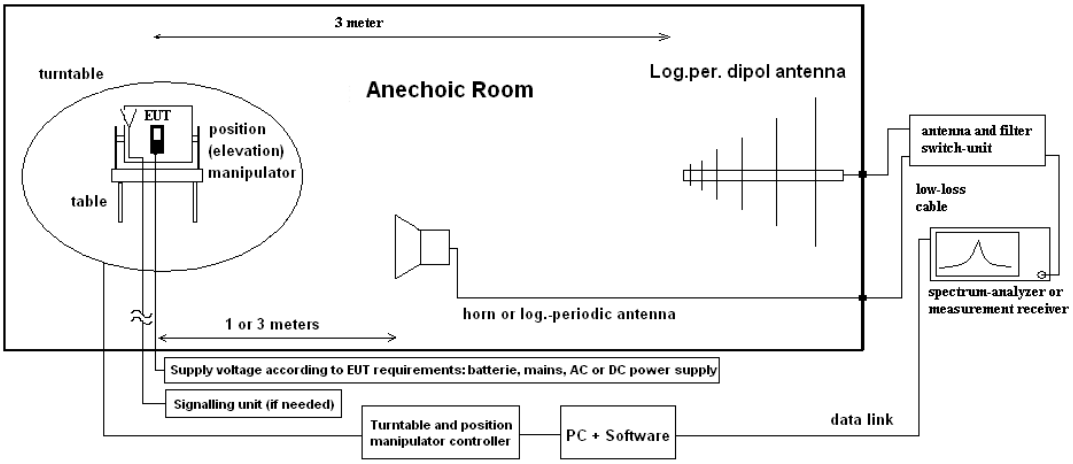

Testing method:

The measurement is made according to relevant reference clauses:
(See Tables *Summary of Test Results* and *Summary of Test Methods* on page 5)

Exploratory, preliminary measurements
The EUT and its associated accessories are placed on a non-conductive position manipulator (tipping device) of 0.8 m height which is placed on the turntable. By rotating the turntable (range 0° to 360°, step 90°) and the EUT itself either on 3-orthogonal axis (portable equipment) or 2-orthogonal axis (defined operational position of EUT) the emission spectrum and its characteristics was recorded with an EMI-receiver, broadband antenna and software.

Measurement antenna: horizontal and vertical, heights: 1,0 m and 1,82 m as worst-case determined by an exploratory emission measurements. The results are documented in a diagram. Critical frequencies (low margin to limit) are saved within a table for further investigations. If various operating modes are supported, further investigations are made to find the worst-case of them. Also the interconnection cables and equipment position were varied in order to maximize the emissions.

Final measurement on critical frequencies
Based on the exploratory measurements, the most critical frequencies are re-measured by main-taining the EUT's worst-case operation mode, cable position, etc. either on 10m OATS or 3m semi-anechoic room.
First a frequency zoom around the critical frequency is done to locate the frequency more precisely. After this step, for all identified critical frequencies, the maximum peak was determined.

Following parameters were varied: the turntable angle continuously in the range 0 to 360 degree, the EUT itself either over 3-orthogonal axis (not defined usage position) or 2-orthogonal axis (defined usage position). The measurement antenna height between 1 m and 4 m.
On the determined worst-case position, a final measurement with necessary bandwidth and detector according standard has been carried out

Formula:

$E_C = E_R + AF + C_L + D_F - G_A$ (1)

$M = L_T - E_C$ (2)

AF = Antenna factor
C_L = Cable loss
D_F = Distance correction factor (if used)
E_C = Electrical field – corrected value
E_R = Receiver reading
G_A = Gain of pre-amplifier (if used)
L_T = Limit
M = Margin

All units are dB-units, positive margin means value is below limit.

4.3.2 Sample calculation

Raw-Value [dBuV/m]	Antenna factor	Distance Correction [dB]	Cable Loss	Preamplifier	Resulting correction value [dB]	Final result [dBuV/m]	Remarks
32.7	22.25	--	3.1	--	25.35	58.05	--

Remark: This calculation is based on an example value at 800.4 MHz

4.3.3 Measurement Location

Test site	120901 - SAC3 - Radiated Emission <1GHz

4.3.4 Limit

Radiated emissions limits, (3 meters)				
Frequency Range [MHz]	Limit [µV/m]	Limit [dBµV/m]	Detector	RBW / VBW [kHz]
30 - 88	100	40.0	Quasi peak	100 / 300
88 - 216	150	43.5	Quasi peak	100 / 300
216 - 960	200	46.0	Quasi peak	100 / 300
960 - 1000	500	54.0	Quasi peak	100 / 300

4.3.5 Result

Diagram	Channel	Mode	Maximum Level [dBµV/m] Frequency Range 30 – 1000 MHz	Result
3.01	0	GFSK | 1Mbit	No critical peaks found	Passed
3.02	17	GFSK | 1Mbit	No critical peaks found	Passed
3.03	39	GFSK | 1Mbit	No critical peaks found	Passed

Remark: for more information and graphical plot see annex A1 **24-1-0047701T001_TR1-A201-R02**

4.4 Radiated field strength emissions above 1 GHz

4.4.1 Description of the general test setup and methodology, see below example:

Evaluating the emissions have to be done first by an exploratory emissions measurement and a final measurement for most critical frequencies. The tests are performed in a CISPR 18-1-4:2010 compliant fully anechoic room (FAR) recognized by the regulatory commission. The measurement distance was set to 3 meter for frequencies up to 18 GHz and 2 meter above 18 GHz. A logarithmic periodic antenna is used for the frequency range 30 MHz to 1 GHz. Horn antennas are used for frequency range 1 GHz to 40 GHz. The EUT is aligned within 3 dB beam width of the measurement antenna with three orthogonal axis measurements on the EUT.

Schematic:

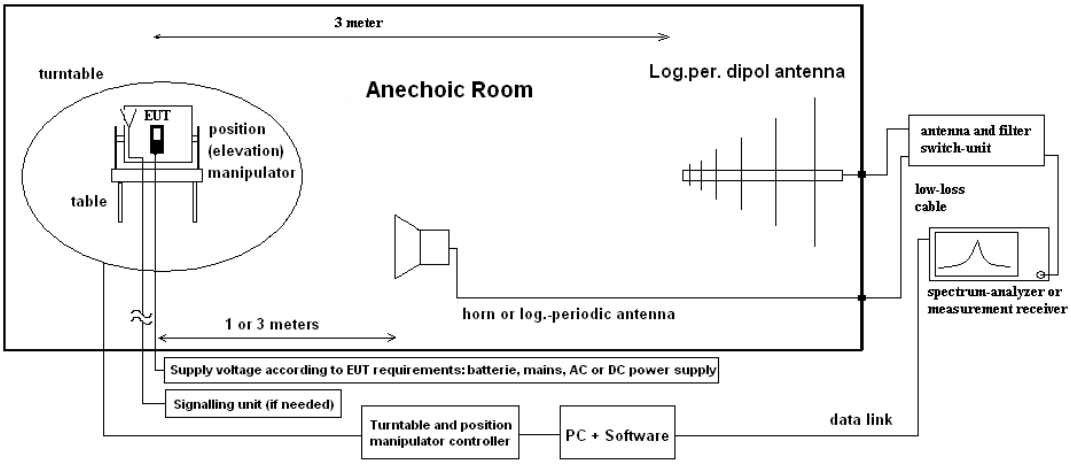

Testing method:

The measurement is made according to relevant reference clauses:
(See Tables *Summary of Test Results* and *Summary of Test Methods* on page 5)

Exploratory, preliminary measurements
The EUT and its associated accessories are placed on a non-conductive position manipulator (tipping device) of 1.55 m height which is placed on the turntable. By rotating the turntable (range 0° to 360°, step 15°) and the EUT itself either on 3-orthogonal axis (portable equipment) or 2-orthogonal axis (defined operational position of EUT) the emission spectrum and its characteristics was recorded with an EMI-receiver, broadband antenna and software.
The measurements are performed in horizontal and vertical polarization of the measurement antennas. The results are documented in a diagram. Critical frequencies (low margin to limit) are saved within a table for further investigations. If various operating modes are supported, further investigations are made to find the worst-case of them. Also the interconnection cables and equipment position were varied in order to maximize the emissions.

Final measurement on critical frequencies
Based on the exploratory measurements, the most critical frequencies are re-measured by maintaining the EUT's worst-case operation mode, cable position, etc.

First a frequency zoom around the critical frequency is done to locate the frequency more precisely. After this step, for all identified critical frequencies, the maximum peak was determined.
Following parameters were varied: the turntable angle continuously in the range 0 to 360 degree, the EUT itself over 3-orthogonal axis and the height for EUT with large dimensions or three axis scan for portable/small equipment.

On the determined worst-case position, a final measurement with necessary bandwidth and detector according standard has been carried out.

Formula:

$E_C = E_R + A_F + C_L + D_F - G_A$ (1)

$M = L_T - E_C$ (2)

E_C = Electrical field – corrected value
E_R = Receiver reading
M = Margin
L_T = Limit
A_F = Antenna factor
C_L = Cable loss
D_F = Distance correction factor (if used)
G_A = Gain of pre-amplifier (if used)

All units are dB-units, positive margin means value is below limit.

4.4.2 Sample calculation

Raw-Value [dBuV/m]	Antenna factor	Distance Correction [dB]	Cable Loss + Preamplifier	Resulting correction value [dB]	Final result [dBuV/m]	Remarks
29.37	41.20	--	24.28	16.92	46.3	CableLoss and PreAmp data in one data correction file

Remark: This calculation is based on an example value at 10 GHz

4.4.3 Measurement Location

Test site 1 – 18 GHz	120904 - FAC1 - Radiated Emissions
Test site 18 – 26.5 GHz	120907 - FAC2 - Radiated Emissions

4.4.4 Limit

Radiated emissions limits, (3 meters)				
Frequency Range [MHz]	**Limit [µV/m]**	**Limit [dBµV/m]**	**Detector**	**RBW / VBW [kHz]**
Above 1000	500	54	Average	1000 / 3000
Above 1000	5000	74	Peak	1000 / 3000

4.4.5 Result

Diagram	Channel	Mode	Maximum Level [dBµV/m] Frequency Range 1 – 18 GHz	Result
4.01	0	GFSK | 1Mbit |	No critical peaks found	Passed
4.04	17	GFSK | 1Mbit |	No critical peaks found	Passed
4.07	39	GFSK | 1Mbit |	No critical peaks found	Passed

Remark: for more information and graphical plot see annex A1 **24-1-0047701T001_TR1-A201-R02**

Diagram	Channel	Mode	Maximum Level [dBµV/m] Frequency Range 18 – 26.5 GHz	Result
4.02	0	GFSK | 1Mbit | AntH	51.022 @22.691 GHz	Passed
4.03	0	GFSK | 1Mbit | AntV	51.386 @23.045 GHz	Passed
4.05	17	GFSK | 1Mbit | AntH	No critical peaks found	Passed
4.06	17	GFSK | 1Mbit | AntV	No critical peaks found	Passed
4.08	39	GFSK | 1Mbit | AntH	No critical peaks found	Passed
4.09	39	GFSK | 1Mbit | AntV	No critical peaks found	Passed

Remark: for more information and graphical plot see annex A1 **24-1-0047701T001_TR1-A201-R02**

4.5 Radiated Band-Edge emissions

4.5.1 Description of the general test setup and methodology, see below example:

Schematic:

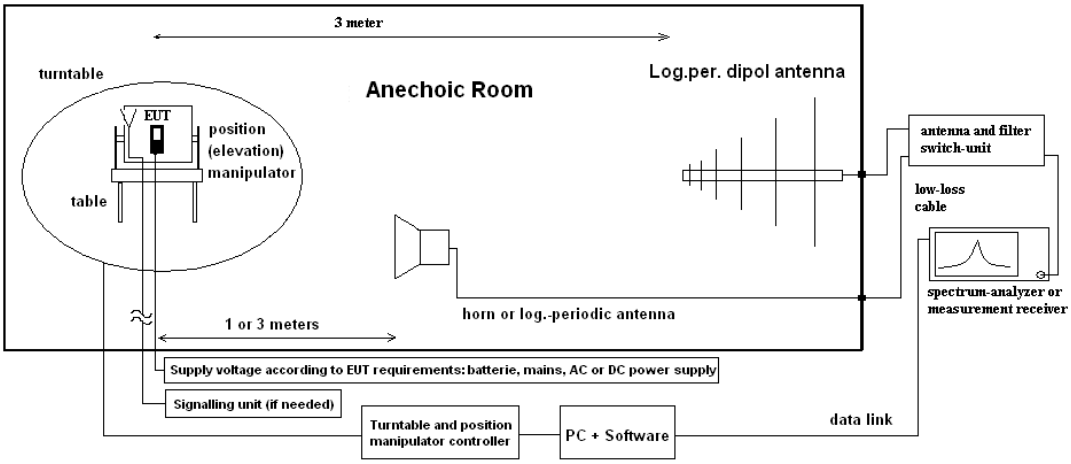

Testing method:

The measurement is made according to relevant reference clauses:
(See Tables *Summary of Test Results* and *Summary of Test Methods* on page 5)

For uncritical results where a measurement resolution bandwidth of 1MHz can clearly show the compliance without influencing the results, a field strength measurement was performed to show compliance.

For critical results a Marker-Delta marker method was used for showing compliance to restricted bands.
The method consists of three independent steps:

1. Step: Prior to the measurement the fundamental radiated In-Band field strength was performed. The determined value is used as reference value.

2. Step: Second step consist of finding the relative attenuation between the fundamental emission and the maximum local out-of-band emission (within 2 MHz range around the band edge either on the band-edge directly or some modulation product if the level is greater than that on the band-edge) when measured with lower resolution bandwidth.

3. .Step: The delta value recorded in step 2 will be subtracted from value recorded in step 1, thus giving the required field strength at the band-edge. This value must fulfil the requirements for radiated spurious emissions in restricted bands in FCC §15.205 with the general limits of FCC §15.209

The EUT was instructed to send with maximum power (if adjustable) according to applicants instructions.

4.5.2 Measurement Location

Test site	120904 - FAC1 - Radiated Emissions

4.5.3 Limit

Frequency Range [MHz]	Pk Limit [dBc]	Avg Limit [dBc]	Avg Limit [dBµV/m]	Pk Limit [dBµV/m]	Detector	RBW / VBW [kHz]
Below 2390	-	-	54	74	Average / Peak	1000 / 3000
Above 2483.5	-	-	54	74	Average / Peak	1000 / 3000
2390 - 2400	-20	-	-	-	Peak	100 / 300
2390 - 2400	-	-30	-	-	Average	100 / 300

4.5.4 Result

Non-restricted bands near-by

Diagram	Channel	Mode	Peak [dBc]	Average [dBc]	Result
9.01	0	GFSK | 1Mbit	43.394	51.769	Passed

Remark: for more information and graphical plot see annex A1 **24-1-0047701T001_TR1-A201-R02**

Restricted bands near-by

Diagram	Channel	Mode	Peak [dBµV/m]	Average [dBµV/m]	Result
9.01	0	GFSK | 1Mbit	57.859	46.555	Passed
9.02	39	GFSK | 1Mbit	58.705	47.597	Passed

Remark: for more information and graphical plot see annex A1 **24-1-0047701T001_TR1-A201-R02**

4.6 Equipment lists

ID	Description	Manufacturer	SerNo	CheckType	Last Check	Interval	Next Check
	120901 - SAC3 - Radiated Emission <1GHz			calchk	cal: 2015-Jul-21 chk: 2021-Jul-27	cal: 10Y chk: 12M	cal: 2025-Jul-21 chk: 2022-Jul-27
20442	Semi Anechoic Chamber SAC3	ETS-Lindgren Gmbh / Taufkirchen	without	cnn	cal: - chk: -	cal: - chk: -	cal: - chk: -
20482	filter matrix Filter matrix SAR 1	cetecom advanced GmbH / Essen	without	cnn	cal: - chk: -	cal: - chk: -	cal: - chk: -
20574	Biconilog Hybrid Antenna BTA-L	Frankonia GmbH / Heideck	980026L	cal	cal: 2022-Jun-15	cal: 36M	cal: 2025-Jun-15
20620	EMI Test Receiver ESU26	Rohde & Schwarz Messgerätebau GmbH / Memmingen	100362	cal	cal: 2024-May-15	cal: 12M	cal: 2025-May-15
20885	Power Supply EA3632A	Agilent Technologies Deutschland GmbH	75305850	cnn	cal: - chk: -	cal: - chk: -	cal: - chk: -
25038	Loop Antenna HFH2-Z2	Rohde & Schwarz Messgerätebau GmbH / Memmingen	879824/13	cal	cal: 2022-Jul-04	cal: 24M	cal: 2024-Jul-04
	120904 - FAC1 - Radiated Emissions			chk	chk: 2023-Aug-22	chk: 12M	chk: 2024-Aug-22
20020	Horn Antenna 3115 (Subst 1)	EMCO Elektronik GmbH	9107-3699	calchk	cal: 2021-Aug-17 chk: 2013-Apr-20	cal: 36M chk: 12M	cal: 2024-Aug-17
20066	Notch Filter WRCT 1900/2200-5/40-10EEK	Wainwright Instruments GmbH	5	chk	chk: 2023-Aug-22	chk: 12M	chk: 2024-Aug-22
20121	Notch Filter WRCB 1879,5/1880,5EE	Wainwright Instruments GmbH	15	chk	chk: 2023-Aug-22	chk: 12M	chk: 2024-Aug-22
20122	Notch Filter WRCB 1747/1748	Wainwright Instruments GmbH / Andechs	12	chk	chk: 2023-Aug-22	chk: 12M	chk: 2024-Aug-22
20254	High Pass Filter 5HC 2600/12750-1.5KK	Trilithic	23042	chk	chk: 2023-Aug-22	chk: 12M	chk: 2024-Aug-22
20287	Pre-Amplifier 25MHz - 4GHz AMF-2D-100M4G-35-10P	Miteq Inc.	379418	chk	chk: 2023-Aug-22	chk: 12M	chk: 2024-Aug-22
20290	Notch Filter WRCA 901,9/903,1SS	Wainwright Instruments GmbH	3RR	chk	chk: 2023-Aug-22	chk: 12M	chk: 2024-Aug-22
20291	High Pass Filter WHJ 2200-4EE	Wainwright Instruments GmbH	14	chk	chk: 2023-Aug-22	chk: 12M	chk: 2024-Aug-22
20338	Pre-Amplifier 100MHz - 26GHz JS4-00102600-38-5P	Miteq Inc.	838697	chk	chk: 2023-Aug-22	chk: 12M	chk: 2024-Aug-22
20341	Digital Multimeter Fluke 112	Fluke Deutschland GmbH / Glottertal	81650455	cal	cal: 2024-May-13	cal: 24M	cal: 2026-May-13
20448	Notch Filter WRCT 1850.0/2170.0-5/40-10SSK	Wainwright Instruments GmbH	5	chk	chk: 2023-Aug-22	chk: 12M	chk: 2024-Aug-22
20449	Notch Filter WRCT 824.0/894.0-5/40-8SSK	Wainwright Instruments GmbH	1	chk	chk: 2023-Aug-22	chk: 12M	chk: 2024-Aug-22
20484	Pre-Amplifier 2,5GHz - 18GHz AMF-5D-02501800-25-10P	Miteq Inc.	1244554	chk	chk: 2023-Aug-22	chk: 12M	chk: 2024-Aug-22
20489	Test Receiver ESU40	Rohde & Schwarz Messgerätebau GmbH / Memmingen	100030	cal	cal: 2024-May-15	cal: 12M	cal: 2025-May-15
20512	Notch Filter WRCA 800/960-02/40-6EEK (GSM 850)	Wainwright Instruments GmbH	24	chk	chk: 2023-Aug-22	chk: 12M	chk: 2024-Aug-22
20549	Log. Per. Antenna HL025	Rohde & Schwarz Messgerätebau GmbH	1000060	calchk	cal: 2021-Aug-18	cal: 36M chk: 12M	cal: 2024-Aug-18
20558	Fully Anechoic Chamber 1	ETS-Lindgren Gmbh / Taufkirchen	-	cnn	cal: - chk: -	cal: - chk: -	cal: - chk: -
20608	Ultrabroadband-Antenna HL562	Rohde & Schwarz Messgerätebau GmbH / Memmingen	830547/009	cal	cal: 2023-Jul-04	cal: 36M	cal: 2026-Jul-04
20611	Power Supply E3632A	Agilent Technologies Deutschland GmbH	KR 75305854	cpu			
20690	Spectrum Analyzer FSU	Rohde & Schwarz Messgerätebau GmbH / Memmingen	100302/026	cal	cal: 2023-May-25	cal: 24M	cal: 2025-May-25
20720	Measurement Software EMC32 [FAC]	Rohde & Schwarz Messgerätebau GmbH	V10.xx	cnn	cal: - chk: -	cal: - chk: -	cal: - chk: -
20868	High Pass Filter AFH-07000	AtlanTecRF	16071300004	chk	chk: 2023-Aug-22	chk: 12M	chk: 2024-Aug-22
20883	Open Switch and control Platform OSP-B200S2 Satellite	Rohde & Schwarz Messgerätebau GmbH / Memmingen	101432	chk	chk: 2023-Aug-22	chk: 12M	chk: 2024-Aug-22
20884	Open Switch and control Platform OSP320	Rohde & Schwarz Messgerätebau GmbH / Memmingen	101391	chk	chk: 2023-Aug-22	chk: 12M	chk: 2024-Aug-22
	120907 - FAC2 - Radiated Emissions			chk	chk: 2024-Mar-15	chk: 12M	chk: 2025-Mar-15
20005	AC - LISN 50 Ohm/50µH ESH2-Z5	Rohde & Schwarz Messgerätebau GmbH / Memmingen	861741/005	cal	cal: 2024-May-16	cal: 12M	cal: 2025-May-16
20133	Horn Antenna 3115 (Meas 1)	EMCO Elektronik GmbH / Gilching	9012-3629	cal	cal: 2023-May-22	cal: 36M	cal: 2026-May-22
20302	Horn Antenna BBHA9170 (Meas 1)	Schwarzbeck Mess-Elektronik OHG / Schönau	155	cpu	chk: 2020-Apr-15	chk: 12M	
20412	Fully Anechoic Chamber 2	ETS-Lindgren Gmbh / Taufkirchen	without	chk	chk: 2024-Apr-14	chk: 12M	chk: 2025-Apr-14
20729	FS-Z140	Rohde & Schwarz Messgerätebau GmbH / Memmingen	101004	cal	cal: 2023-Jun-16	cal: 36M	cal: 2026-Jun-16
20730	FS-Z110	Rohde & Schwarz Messgerätebau GmbH / Memmingen	101468	cal	cal: 2023-Jun-02	cal: 36M	cal: 2026-Jun-02
20731	FS-Z75	Rohde & Schwarz Messgerätebau GmbH / Memmingen	101022	cal	cal: 2022-May-18	cal: 36M	cal: 2025-May-18
20733	Harmonic Mixer FS-Z220	RPG-Radiometer Physics GmbH / Meckenheim	101009	cal	cal: 2024-May-24	cal: 36M	cal: 2027-May-24
20734	Harmonic Mixer FS-Z325	RPG-Radiometer Physics GmbH / Meckenheim	101005	cal	cal: 2024-May-24	cal: 36M	cal: 2027-May-24
20765	Pickett-Potter Horn Antenna FH-PP 40-60	RPG-Radiometer Physics GmbH / Meckenheim	010001	chk	chk: 2023-Oct-20	chk: 12M	chk: 2024-Oct-20
20767	Pickett-Potter Horn Antenna FH-PP 140-220	RPG-Radiometer Physics GmbH / Meckenheim	010011	chk	chk: 2023-Oct-20	chk: 12M	chk: 2024-Oct-20
20811	Horn Antenna ASY-SGH-124-SMA	Antenna Systems Solutions S.L	29F14182337	cal	cal: 2021-Oct-20	cal: 36M	cal: 2024-Oct-20
20812	Pickett-Potter Horn Antenna FH-PP-325	RPG-Radiometer Physics GmbH / Meckenheim	10024	chk	chk: 2023-Oct-20	chk: 12M	chk: 2024-Oct-20
20813	Pickett-Potter Horn Antenna FH-PP 075	RPG-Radiometer Physics GmbH / Meckenheim	10006	chk	chk: 2023-Oct-20	chk: 12M	chk: 2024-Oct-20

ID	Description	Manufacturer	SerNo	CheckType	Last Check	Interval	Next Check
20814	Pickett-Potter Horn Antenna FH-PP 140	RPG-Radiometer Physics GmbH / Meckenheim	10008	chk	chk: 2023-Oct-20	chk: 12M	chk: 2024-Oct-20
20815	Pickett-Potter Horn Antenna FH-PP 110	RPG-Radiometer Physics GmbH / Meckenheim	10014	chk	chk: 2023-Oct-20	chk: 12M	chk: 2024-Oct-20
20816	SGH Antenna SGH-26-WR10	Anteral S.L.	1144	cnn	cal: - chk: -	cal: - chk: -	cal: - chk: -
20817	Waveguide Rectangular Horn Antenna SAR-2309-22-S2	ERAVANT / Torrance	13254-01	chk	chk: 2023-Oct-20	chk: 12M	chk: 2024-Oct-20
20836	1-18 GHz Amplifier	Wright Technologies, Inc., Inc. / Roseville	0001	chk		chk: 36M	
20907	Waveguide WR-15 attenuator STA-30-15-M2	SAGE Millimeter Inc.	13256-01	cnn	cal: - chk: -	cal: - chk: -	cal: - chk: -
20908	Waveguide WR 10 attenuator STA-30-10-M2	SAGE Millimeter Inc.	13256-01	cnn	cal: - chk: -	cal: - chk: -	cal: - chk: -
20909	Waveguide Horn Antenna PE9881-24	Pasternack Enterprises, Inc.	37/2016	cnn	cal: - chk: -	cal: - chk: -	cal: - chk: -
20910	Frequency Multiplier 936VF-10/385	MI-Wave, Millimeter Wave Products Inc.	142	cnn	cal: - chk: -	cal: - chk: -	cal: - chk: -
20911	Frequency Multiplier 938WF-10/387	MI-Wave, Millimeter Wave Products Inc.	141	cnn	cal: - chk: -	cal: - chk: -	cal: - chk: -
20913	Phase Amplitude Stable Cable Assembly DC-40GHz	RF-Lambda Europe GmbH	AC19040001	cnn	cal: - chk: -	cal: - chk: -	cal: - chk: -
25457	DRG Horn Antenna SAS-574	A.H. Systems, Inc. / Chatsworth	383	cal	cal: 2022-Mar-28	cal: 36M	cal: 2025-Mar-28

Tools used in 'P1M1'

4.6.1 Legend

Note / remarks	Interval of calibration & Verification
12M	12 months
24M	24 months
36M	36 months
10Y	10 Years

Abbreviation Check Type	Description
cnn	Calibration and verification not necessary
cal	Calibration
calchk	Calibration plus intermediate Verification
chk	Verification
cpu	Verification before usage

5 Results from external laboratory

None	-

6 Opinions and interpretations

None	-

7 List of abbreviations

None	-

8 Measurement Uncertainty valid for conducted/radiated measurements

The reported uncertainties are calculated based on the standard uncertainty multiplied with the appropriate coverage factor **k**, such that a confidence level of approximately 95% is achieved. For uncertainty determination, each component used in the concrete measurement set-up was taken in account and it contribution to the overall uncertainty according its statistical distribution calculated.

Issue No.	Measurement type	Reference	Frequency range of measurement		Calculated Uncertainty based on confidence level of 95.54%	Remarks
			Start [MHz]	Stop [MHz]		
1	Magnetic Field Strength	EN ,FCC, JP, IC	0.009	30	4.86	Magnetic loop antenna, Pre-Amp on
2	RF-Output Power (EIRP) Unwanted emissions (EIRP) [dB]	EN, FCC, JP, IC	30	100	4.57	without Pre-Amp
			30	100	4.91	with Pre-Amp
			100	1000	4.02	without Pre-Amp
			100	1000	4.26	with Pre-Amp
			1000	18000	4.36	without Pre-Amp
			1000	18000	5.23	with Pre-Amp
			18000	33000	4.92	Schwarzbeck BBHA9170 (#20302) Antenna set-up non-waveguide antenna)
			33000	50000	4.17	Set-up for Q-Band (WR-22), non-wave guide antenna
			40000	60000	4.69	Set-up U-Band (WR-19), non-waveguide antenna
			50000	75000	4.06	External Mixer set-up V-Band (WR-15)
			75000	110000	4.17	External Mixer set-up W-Band (WR-6)
			90000	140000	5.49	External Mixer set-up F-Band (WR-8)
			140000	225000	6.22	External Mixer set-up G-Band (WR-5)
			225000	325000	7.04	External Mixer set-up (WR-3)
			325000	500000	8.84	External Mixer set-up (WR-2.2)
3	Radiated Blocking [dB]	EN	1000	18000	2.85	Typical set-up with microwave generator and antenna, value for 7 GHz calculated
			18000	33000	4.66	Typical set-up with microwave generator and antenna
			33000	50000	3.48	WR-22 set-up
			50000	75000	3.73	WR-15 set-up
			75000	110000	4.26	WR-6 set-up
4	Frequency Error / UWB+FMCW [kHz]	EN, FCC, JP, ISED	40000	77000	276.19	calculated for 77 GHz (FMCW) carrier
			6000	7000	33.92	calculated for 6.5 GHz UWB Ch.5
	Frequency Error / NFC [Hz]	EN, FCC, JP, ISED	11.00	14.00	20.76	calculated for 13.56 MHz NFC carrier
5	TS 8997 Conducted Parameters	FCC15/18 / ISED	30	6000	1.11	1. Power measurement with Fast-sampling-detector
			30	6000	1.20	2. Power measurement with Spectrum-Analyzer
			30	6000	1.20	3. Power Spectrum-Density measurement
			30	7500	1.20	4. Conducted Spurious emissions
			0.009	30	2.56	5. Conducted Spurious emissions
			2.4	2.48	1.95 ppm	6a. Bandwidth / 2-Marker Method for 2.4 GHz ISM
			5.18	5.825	7.180 ppm	6b. Bandwidth / 2-Marker Method for 5 GHz WLAN
			5.18	5.825	1.099 ppm	7. Frequency (Marker method) for 5 GHz WLAN
			30	6000	0.11561 µs	8. Medium-Utilization factor / Timing
			30	6000	1.85	9a. Blocking-Level of companion device
			30	6000	1.62	9b. Blocking Generator level
6	Conducted Emissions	EN, FCC	0.009	30	3.57	general EMI-measurements on AC/DC ports

9 Versions of test reports (change history)

Version	Applied changes	Date of release
--	Initial release	2024-Jul-26
R02	@2.7 Equipment under Test (EUT) HVIN and PMN added @4.5 Radiated Band-Edge emissions results updated	2024-Aug-26
--	--	--

End Of Test Report