美膳狮

Meishanshi 2K
User Manual

Reading Guide

Document Purpose:

This document mainly provides operating instructions for the smart cooking machine provided by Xianglu Technology Co., Ltd., so that users can basically understand the functions, performance and characteristics of the product and master the use and maintenance of the product.

Target Audience:

This manual is written for users of the smart cooking machine. It describes the installation, operation and maintenance of the product and intends to provide installation and operation personnel as well as users with installation guidelines and operating procedures for this product.

[CAUTION] This product does not take into account the following situations:

----------use of the product by unattended children and disabled persons

----------misuse of the product by children for fun

[WARNING] To ensure safe use and avoid injury and property damage, please be sure to observe the following safety precautions. Failure to observe the safety precautions and improper use of the product may result in an accident.

Please take attention that changes or modification not expressly approved by the party responsible for compliance could void the user's authority to operate the equipment.

This device complies with Part 15 of the FCC Rules. Operation is subject to the following two conditions:

(1) This device may not cause harmful interference, and

(2) This device must accept any interference received, including interference that may cause undesired operation.

This equipment complies with FCC radiation exposure limits set forth for an uncontrolled environment. This equipment should be installed and operated with minimum distance 20cm between the radiator & your body.

Sign Definition:

MANDATORY PROHIBITION WARNING CAUTION

	This product must be effectively grounded.
	The air inlet and outlet of the product must be kept clear and must not be covered

	or blocked.
❗	This product is equipped with a special pot. It is strictly prohibited to remove the original pot and use another pot on this product without permission.
❗	Liquid seasonings must be placed in the order in which the product is shipped from the factory.
❗	Be sure to add the appropriate seasonings to the liquid seasoning containers according to their labels.
⃠	Untrained personnel are prohibited from operating this product.
⃠	Non-professionals are prohibited from disassembling the electrical box and start-stop switch.
⃠	Non-professionals are prohibited from operating the product when the left and right panels are disassembled.
⃠	It is prohibited to rinse the machine body directly with a water gun.
⃠	Keep any part of your body away from the rotating pot or other moving parts to avoid accidental injuries.
⃠	Dry-burning of the pot is prohibited to avoid damage to the pot and ignition of the stirrer by continuous high temperature.
⃠	It is prohibited to pour the water starch directly into the water starch tank when the water starch is not fully mixed and there is still precipitation.
⃠	It is prohibited to use the water starch tank without a stirrer to avoid starch precipitation in the tank.
⚠	This product is for indoor use only.
⚠	If the product is not used to feed liquid seasoning for a long time, please empty and clean the container of liquid seasoning, etc., and then clean the pipes.
⚠	If the liquid seasoning is not used up for a long time, please check whether the seasoning inside the container has deteriorated; and if the seasoning has deteriorated, please be sure to clean it up before further use.
⚠	Some models are equipped with a spray gun for rinsing the inner guts of the pot and the sink of the worktop. Do not use it to rinse the pot or other parts of the machine.
⚠	When the product malfunctions, an alert message will appear on the display. Follow the instructions on the display.
⚠	When using the product for cooking, please keep a proper distance to avoid burns caused by hot oil splashing due to impurities.

⚠	Note that the various seasonings to be added must be free from other impurities.
⚠	Note that only when the machine is turned on and the well-mixed, unsettled water starch is placed inside the machine in time, can effective stirring be performed all the time.
⚠	Note that when the machine is turned on again after shutdown, you need to open the machine to check the water starch and manually assist the stirring to make it evenly mixed.
⚠	Be sure to clean all seasoning containers and liquid seasoning pipes regularly according to the product maintenance requirements.
⚠	Users of cardiac pacemakers should consult with the manufacturer before operating the product.
⚠	The installation and maintenance of this product involves disassembly and assembly work, which must be operated by our after-sales personnel or trained personnel.
⚠	Any damaged power cord must be replaced by a professional from the manufacturer, its maintenance department or the like to avoid danger.
⚠	This manual is not intended for persons (including children) who are physically, sensually or mentally impaired, or who have deficiencies in experience and knowledge.
⚠	All illustrations shown in this manual are for illustrative purposes and for indication. Please refer to the actual appearance of the product.

1 Basic Equipment Composition

1.1 Equipment Size

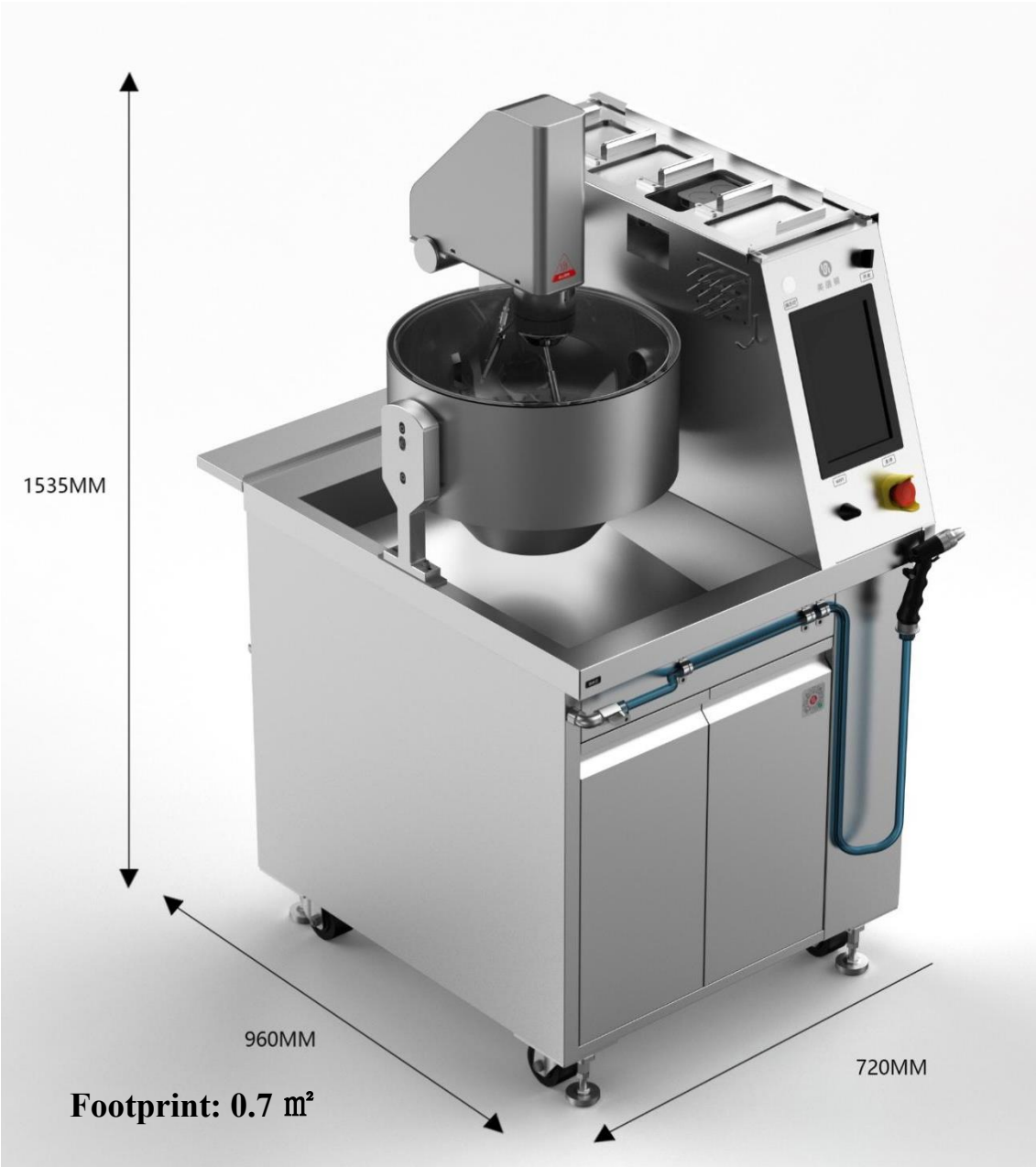

1.2 Exterior Composition and Button Description

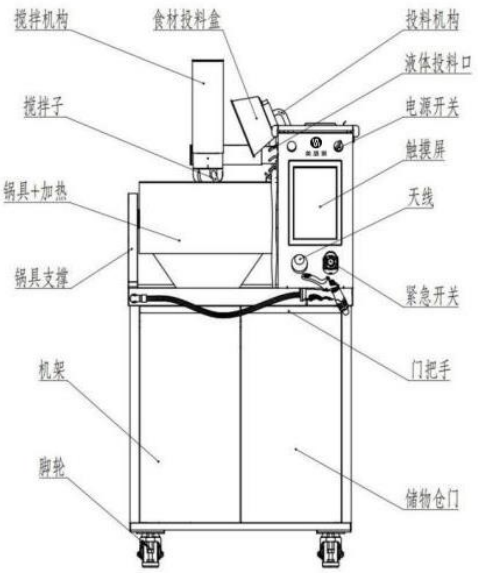

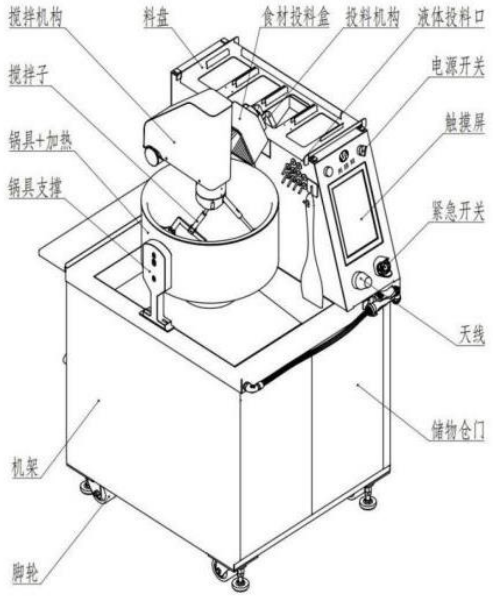

搅拌机构	Stirring Mechanism
食材投料盒	Ingredient Feeder
投料机构	Feeding Mechanism
液体投料口	Liquid Feeder
搅拌子	Stirrer
电源开关	Power Switch
触摸屏	Touch Screen
锅具+加热	Pot + Heating
天线	Antenna
锅具支撑	Pot Support
紧急开关	Emergency Switch
机架	Rack
脚轮	Caster
门把手	Door Handle
储物仓门	Storage Bin Door

搅拌机构	Stirring Mechanism
料盘	Tray
食材投料盒	Ingredient Feeder
投料机构	Feeding Mechanism
液体投料口	Liquid Feeder
搅拌子	Stirrer
电源开关	Power Switch

触摸屏	Touch Screen
锅具+加热	Pot + Heating
锅具支撑	Pot Support
紧急开关	Emergency Switch
天线	Antenna
机架	Rack
储物仓门	Storage Bin Door
脚轮	Caster

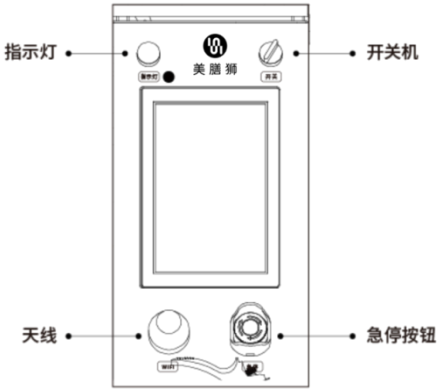

指示灯	Indicator Light
开关机	On/Off
天线	Antenna
急停按钮	Emergency Stop Button

Button Description	Function
Indicator Light (upper left)	After startup: Green/white indicates normal, while red indicates abnormal. After shutdown: The indicator light is off.
On/Off (upper right)	Startup: Turn the black button to the right for startup; Shutdown: Turn the black button to the left for shutdown.
Antenna (lower left)	Signal receiver
Emergency Stop (lower right)	In case of emergency, press the red button. The machine will be powered off as a whole and will not continue to perform the operation. After the malfunction is corrected, turn the red button to the right. Emergency stop will be released, and the machine will start automatically. **Note: Do not press this button unless an emergency occurs.**

1.3 Basic Parameters

Product Name	Meishanshi 2K
Rated Voltage	380V
Maximum Power	8700W
Pot Size	400*400mm
Capacity/Output	2kg/time
Dimensions	720*960*1535mm
Footprint	0.7 ㎡

2 Basic Operations and Settings

2.1 Operation Screen

2.1.1 Account Opening

- When the device is turned on for the first time, it will automatically enter the activation page. If the activation is successful, it will enter the self-test page. If the activation fails, it will enter the device sequence list exception page.
- The account information is provided by the on-site delivery personnel. Password modification is not yet supported. If you forget your password, please contact the customer service personnel immediately.

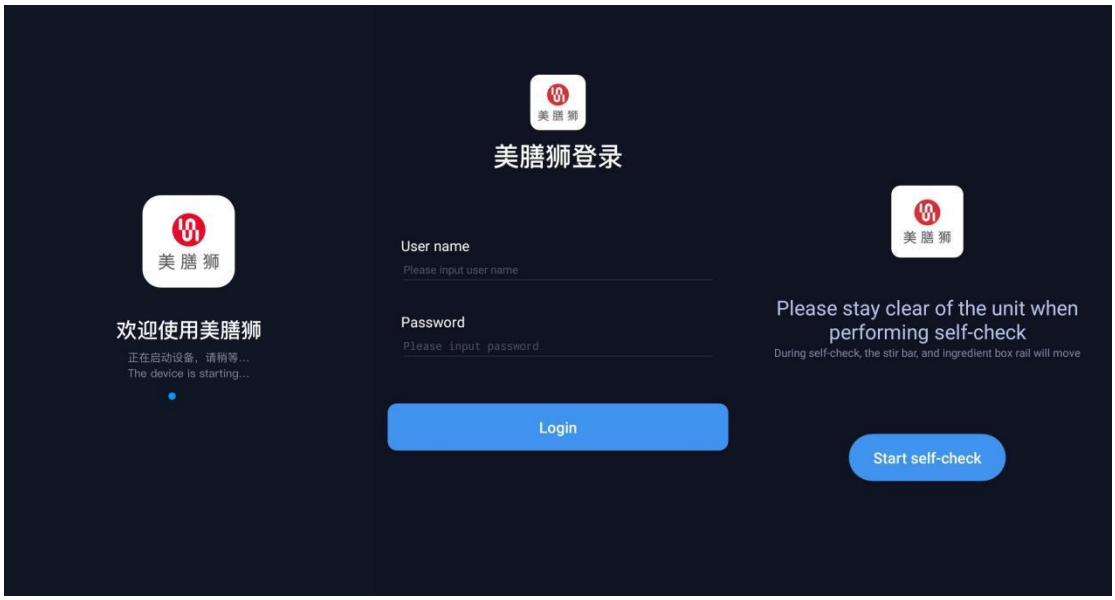

Note: After the self-test starts, the feeding rack and the pot will move automatically. Please stand away from the feeding rack.

2.1.2 Home Page

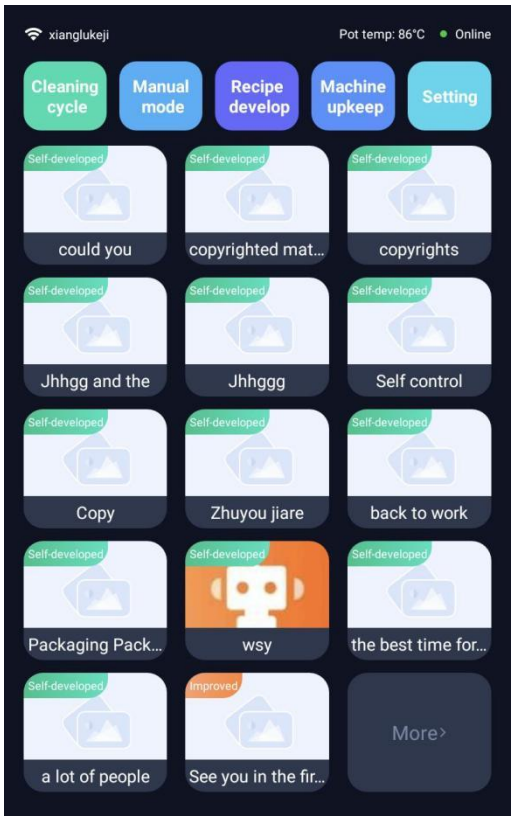

Function	Description
Cleaning Cycle	Press the cleaning cycle button. The pot will be automatically adjusted to the pot wash position. Pick up the water spray gun and press it to clean the pot. After the completion of pot wash, press the button to stop pot wash. The pot and the stirrer will stop running and return to the cooking position.
Recipe develop	The dishes in the Home Page list are dishes that have been purchased/developed. Press and hold a dish to "Move to Frequently Used Dishes". You can add up to 12 dishes.
Machine Upkeep	Regular use of a maintenance program on a daily/fixed periodic basis helps to care for and maintain the pot.
Settings	Basic function settings of the machine, including sauce calibration, liquid sauce placement details, dish development mode switching, WiFi link, volume adjustment and system upgrade, etc.

2.2 Network Settings

Settings: App Home Page - Settings - WiFi Link. Select an available WiFi and enter the correct password for successful connection.

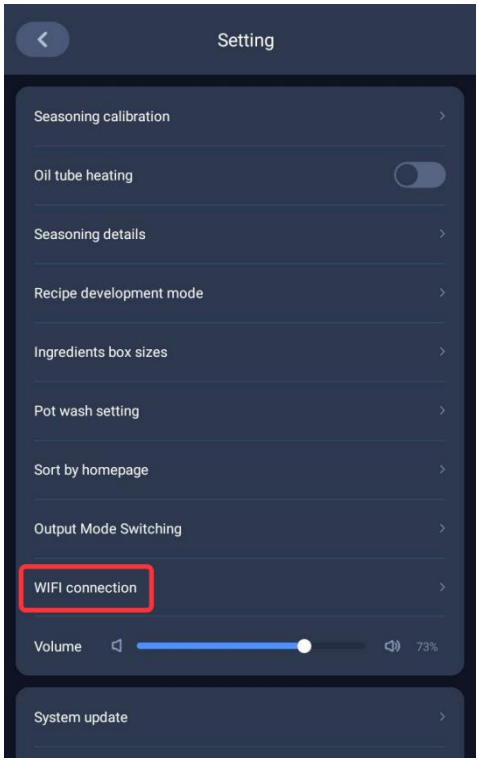

2.3 Seasoning Calibration

2.3.1 Situations Requiring Calibration

(1) Switch to a new seasoning
(2) Switch to a new brand (the seasoning position is unchanged)
(3) Change of seasoning type

2.3.2 Preparation Before Calibration

- Prepare the sauce, such as oil, soy sauce and vinegar, in advance according to the sauce template for a recipe.
- You need to prepare a kitchen electronic scale and an empty container (you need to weigh the sprayed sauce).
- If you intend to change the use of a pipe for another sauce (e.g. switch from vinegar to soy sauce), you need to clean the pipe with clean water before further calibration.
- Cleaning: Click "Press and Hold to Spray" in the calibration page until all the air is discharged and the sauce can be sprayed properly.

2.3.3 seasoning calibration

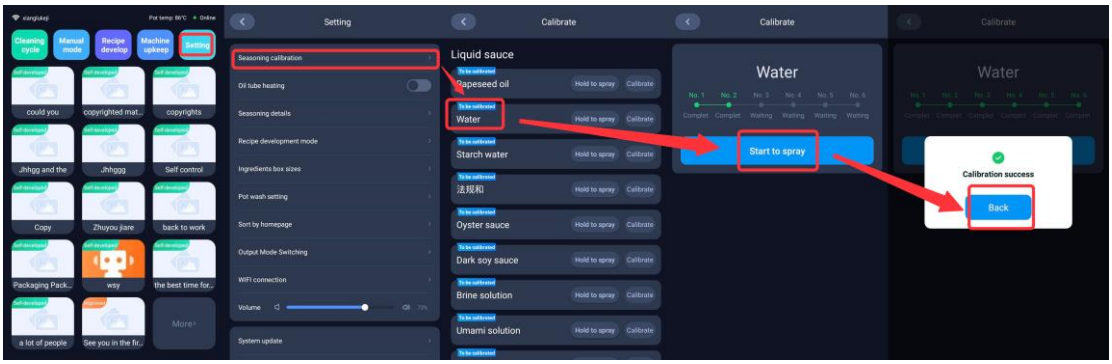

Workflow

6 calibrations for each nozzle

- Click Settings - Seasoning Calibration on the operation screen, and select a nozzle in "Pending Calibration" status.
- Click "Press and Hold to Spray" to discharge the air in the feed pipe to ensure that the nozzle can spray seasoning properly.
- Click the "Pending Calibration" nozzle on the machine screen to enter the calibration page.
- Place a container under the nozzle, and be sure to catch all the sprayed seasoning.
- After the seasoning is sprayed, weigh the container on the kitchen scale and enter the weight on the screen.
- Click the Start Spray button on the machine screen again. The machine will start spraying.
- Weigh the weight and enter it on the screen. After entering the weight, reset the current weight to zero on the electronic scale and proceed to the next spraying.
- After the calibration is completed, the nozzle's Pending Calibration status disappears and the nozzle is ready for use.

2.4 Seasoning Proportioning

(I) Proportioning Description

Spray Nozzle	Seasonings	Grammage Ratio	Brand
Salt water	Salt, water	Salt : water 1:4, mixed with boiled water Stir thoroughly until the granules are completely melted	CNSIG (iodized salt from deep wells)
Flavored water	MSG, chicken essence, water	MSG : chicken essence : water 1:1:4, mixed with boiled water Stir thoroughly until the granules are completely melted	Lianhua MSG & Knorr Chicken Essence
Vinegar	Vinegar	No dilution	Hengshun Zhenjiang Vinegar
Oyster sauce	Diluted oyster sauce	Oyster sauce : water 3:1, mixed with boiled water until evenly mixed	Haitian Oyster Sauce

Dark soy sauce	Soy sauce	No dilution	Longpai Soy sauce
Light soy sauce	Light soy sauce	No dilution	Haitian Golden Label Soy Sauce
Oil	Oil	No dilution	Arawana Non-GMO Soybean Oil
Water starch	Water starch	1) Compound powder: Starch : xanthan gum 100:0.6 2) Water starch: Compound powder : cold water 100.6:500 (Stir thoroughly until the granules are completely dissolved in the water.) 3) Filter: Use a 30-mesh sieve (such as nylon mesh) to filter the thick starch water.	Haoba Jean's Windmill Starch & Wanbang Xanthan Gum

Note: For the dilution of salt, MSG, chicken essence and oyster sauce, please be sure to use boiled water (the use of cold water can lead to easy deterioration).

(II) Storage

1) The seasonings should be stored at room temperature. The recommended shelf life is as follows:

Seasoning	Recommended shelf life (stored at room temperature)	Recommended shelf life (stored at room temperature)
Season	Spring and winter (January-March, September-December)	Autumn and summer (April-September)
Salt water	21 days	14 days
Flavored water	7 days	3 days
Vinegar	7 days	3 days
Diluted oyster sauce	7 days	3 days
Dark soy sauce	21 days	14 days
Light soy sauce	21 days	14 days
Oil	21 days	14 days
Water starch	——	——

2) Cleaning cycles and methods of liquid containers and pipes

(1) Regularly empty the liquid containers **every two weeks**: Clean the containers with clean water or hot water, dry them and put them back to the original positions in the original order.

(2) Regularly clean the liquid pipes **every two weeks**: Empty the liquid containers, add clean water (or 60°C hot water, preferred) to the liquid containers, manually execute the spray command (e.g. 50g of soy sauce), and repeat several times until the pipes are clean and the sprayed water is clear.
(3) After cleaning the liquid containers and pipes, you need to add the corresponding seasonings and manually execute the spray command until each seasoning fills the corresponding pipe.
(4) Water starch: **After finishing cooking every day, clean up the remaining water starch** and wash the water starch pipe with cold water (at ~30°C). Every week, wash the water starch pipe with cold water (at ~30°C). Add a small amount of salt to disinfect it to prevent the formation of moss, mold, etc. If you forget to wash the pipe one day and moss and other dirt are formed after long time, please pour cold water (at ~30°C) with a small amount of salt into the starch tank (e.g. 50g per feeding), and wash it several times repeatedly until no dirt flows out.
Note: Don't use hot water to clean the water starch pipe, because water starch will become gelatinized when heated, making it difficult to clean.

3 Recipe Cooking

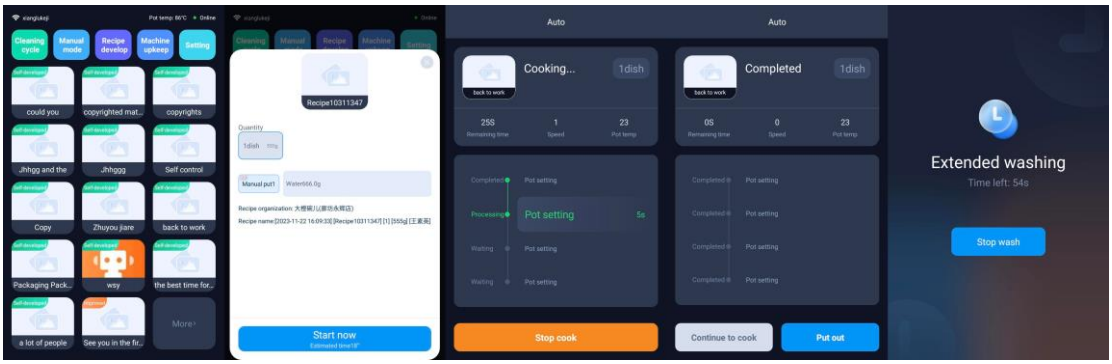

Workflow of recipe cooking

- **Place prepared materials:** Place raw materials on the feeding rack in turn.
- **Select target dish:** Select the target dish to be cooked from the list of dishes.
- **Select the number of servings:** Select the number of servings and the flavor, and then click Cook Now.
- **In cooking process:** The device automatically puts in ingredients and seasonings according to the developed process. If there is an abnormality during the process, you can select "Stop Cooking".
- **Dish out:** After cooking is completed, press "Dish Out". The pot will be automatically adjusted to the dish out position;
- **Before adjusting the dish out position, please place the serving utensils first to prevent the dish from falling.**
- **Pot wash:** After dish out is completed, press "Pot Wash" to enter the pot wash process.

4 Manual Cooking

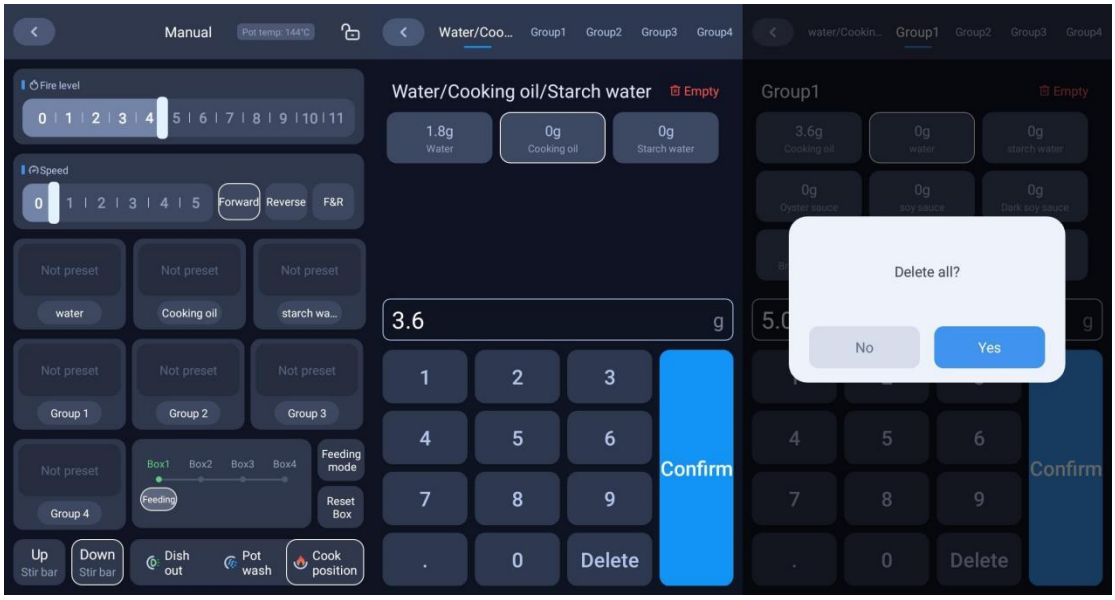

Function Description

When no recipe is available or the automatic cooking function cannot be used, the chef can complete dish cooking manually in an emergency.

Workflow of manual cooking

- **Place prepared materials:** Place the raw materials of a dish on the feeding rack in turn (from near to far: 1# feeder to 4# feeder in turn).
- **Enter the manual cooking page:** Click Home Page - Manual Cooking to enter the cooking page. Adjust the heat and pot rotation speed.
- **Set seasoning grams 1:** For water, oil and starch water, default fixed sauce feeding positions are used. You can set the grams to be fed.
- **Set seasoning grams 2:** For combinations 1-4, set the grams of seasoning required for the dish according to the cooking requirements.
- **Add ingredients:** Manually click "Add ingredients" in turn. The ingredient containers will automatically move and place ingredients into the pot.
- **Add seasonings:** Add prepared seasonings. Click the corresponding Oil and Combination 1, etc. The preset grams of seasonings will be sprayed automatically.
- **End the cooking task:** After the cooking task is finished, adjust the heat and rotation speed to 0.
- **Dish out:** Select "Dish Out Position" on the operation screen. **Please place the serving utensils first before adjusting the dish out position.**
- **Pot wash:** After cooking is completed, you can adjust "Pot Wash Position" to enter the pot wash process.

5 Cleaning and Maintenance

No.	Cleaning Module	Recommended Cleaning Frequency	Tool Preparation
1	Pot	After each use	Dish cloth, scouring pad, detergent, water spray gun
2	Stirrer	After each use	Dish cloth, scouring pad, detergent, water spray gun
3	Feed Box	After each use	Dish cloth, scouring pad, detergent
4	Feed Opening	Once per half day, once per day	Dish cloth, scouring pad, detergent
5	Residue Collection Tank	Once per half day, once per day	Dish cloth, scouring pad, detergent, water spray gun
6	Liquid Feed Pipe	After switch to a new sauce brand, in case of sauce clogging, twice per week	Clean water (or 60°C hot water, preferred); cold water should be used for the water starch pipe

In order to ensure the efficiency of the device, please be sure to clean it according to the above cleaning frequency, so that the operation of the device will not be affected by improper cleaning.

5.1 Pot Cleaning

5.1.1 Tool Preparation

Dish cloth, scouring pad, detergent, water spray gun

5.1.2 Completion Time

Estimated completion time: 5 minutes

5.1.3 Operation Steps

1. Three ways to enter the pot wash position

- Home Page - Click Pot Wash: The pot can be automatically adjusted to the pot wash position. Just take out the water spray gun to clean it.
- Recipe cooking: After the dish is cooked and out, click "Pot Wash" to enter the pot wash process.
- Manual cooking: After the completion of cooking, you can click "Pot Wash Position" to enter the pot wash process.

2. Pot wash steps

- Adjust the pot to the pot wash position.
- Use the water spray gun to rinse off food residue.
- Remove oil and residue from the inner and outer surfaces of the pot with a scouring pad.
- Rinse off the detergent inside and outside the pot with the water spray gun.
- Wipe off excess water with a wrung-out dish cloth to keep the pot clean.

5.2 Stirrer Cleaning

5.2.1 Tool Preparation

Dish cloth, scouring pad, detergent, water spray gun

5.2.2 Completion Time

Estimated completion time: 3 minutes

5.2.3 Operation Steps

1) Step 1 (about 2 minutes)

- In the manual cooking function, adjust the rotation speed to 0.
- After the completion of rotation, use the water spray gun to rinse away food residue from the stirrer.
- Remove oil and residue from the outer surface of the stirrer with a scouring pad.
- Clean the dead corners of the stirrer by pulling back and forth with detergent.
- Check whether the screws fixing the stirring blade on the edge of the pot are loose.

2) Step 3 (about 1 minute)

- Use a wrung-out dish cloth with detergent to clean the front of the stirrer.
- Use a wrung-out dish cloth with detergent to clean the dead corners.
- Rinse the stirrer with a water spray gun, and then wipe off excess water with a wrung-out dish cloth.

5.3 Feed Box Cleaning

5.3.1 Tool Preparation

Dish cloth, scouring pad, detergent

5.3.2 Completion Time

Estimated completion time: 2 minutes

5.3.3 Operation Steps

Step 1 (2 minutes)

- Remove the feed box in an orderly manner.
- Rinse off food residue in the feed box with water.
- Pour in detergent and use a scouring pad to clean the dead corners.
- After rinsing, wipe away excess water with a wrung-out dish cloth.

5.4 Feed Opening Cleaning

5.5.1 Tool Preparation

Dish cloth, scouring pad, detergent

5.5.2 Completion Time

Estimated completion time: 2 minutes

5.5.3 Operation Steps

Step 1 (2 minutes)

- Use a wrung-out scouring pad with detergent to wipe off oil stains near the spray nozzle.
- Use a scouring pad to clean away stubborn oil stains on the surface.
- Use a wrung-out dish cloth to wipe away excess water and keep the spray nozzle clean.

5.5 Residue Collection Tank Cleaning

5.5.1 Tool Preparation

Dish cloth, scouring pad, detergent, water spray gun

5.5.2 Completion Time

Estimated completion time: 4 minutes

5.5.3 Operation Steps

Step 1 (3 minutes)

- Take out the water spray gun and rinse food residue from the dish out position and the bottom of the pot to the residue collection tank.
- Use a wrung-out dish cloth with detergent to clean the dish out position and the bottom of the pot.
- Use a wrung-out dish cloth to wipe off any excess water again.
- **Step 2 (1 minute)**
- Remove the rack from the residue collection tank and pour the food residue into the "food waste" trash can.
- Rinse off the residue rack and put it back into the residue collection tank.

5.6 Liquid Feed Pipe Cleaning

5.6.1 Tool Preparation

Empty container, warm water

5.6.2 Completion Time

Estimated completion time: 4 minutes

5.6.3 Operation Steps

Step 1 (2 minutes)

Prepare an empty container and fill it with water.

Insert the feed pipe to be cleaned into clean water.

Step 2 (2 minutes)

- In the Machine Settings page, click Seasoning Calibration.
- Locate the feed pipe to be cleaned and press "Press and Hold to Spray".
- Press and hold to spray until clean water is sprayed from the feed pipe.
- Check whether the feed pipe is clean.
- Remove the feed pipe from clean water, and then press "Press and Hold to Spray" until all the water comes out of the pipe. Note: After cleaning is completed, calibrate the feed pipe again.

6 Troubleshooting

Symptom	Cause	Solution
The feed pipe cannot spray out seasoning.	Insufficient seasoning	Add more seasoning.
	The feed pipe is clogged.	Spray clean water to clean the feed pipe repeatedly.
The feed rack is stuck.	The feed rack is stuck in manual movement.	When the power is off, check whether there is any foreign matter in the feeding rack.
Abnormal dish production	Seasonings are not prepared according to standard ratios.	Prepare seasonings according to the requirements in Seasoning Preparation.
	Improper cutting and preparation of ingredients	Cut and prepare ingredients according to the corresponding recipe.
Cooking cannot be stopped during manual cooking.	There isn't a Stop Cooking button during manual cooking.	Stop the cooking task by adjusting the heat and speed to 0 at the same time.
The water spray gun cannot produce water.	Whether the water valve is open	Turn the switch to confirm whether it is open
The stirrer is stuck.	The stirrer malfunctions.	After the stirring stops, manually turn the stirrer to check whether the rotation is smooth and there is no abnormal noise. If there is any abnormality, report it for repair and upload the video.

7 Safety Warnings

7.1 Precautions

- When the machine is heated, please do not touch the pot and other operating parts of the machine. Overheating of the pot may cause burns; in case of emergency, press the red emergency stop button.
- The water spray gun has high pressure. Do not take it off for fun or use it to spray other objects.
- Do not place any flammable or combustible substances near the device.
- Do not block the movement of the upper feeding system during any process, as this may cause damage to the device.
- Please follow the cleaning and maintenance schedule after using the device.

7.2 Prohibitions

- It is prohibited to block the delivery parts of the device.
- It is prohibited to squeeze or tap the touch panel with force.

- It is prohibited to click on a command to execute the next action while the current action of the device is not completed.
- It is prohibited to step on the device or place heavy objects on it.
- It is prohibited to disassemble, modify, repair or clean the internal parts of the device without authorization.
- It is prohibited to use corrosive chemicals to clean the device.

8 Contact Us

- If you encounter any operation problem or any other abnormality during use, please contact us at 400-8098-550.

Attachment - Seasoning Purchase Link (for reference)

Seasoning	Brand	Package Size	Purchase Channel (click directly)
Salt	CNSIG Iodized Salt	400g	CNSIG Iodized Salt - JD Link
MSG	Lianhua MSG	2kg	Lianhua MSG - JD Link
Chicken essence	Knorr Chicken Essence	800g	Knorr Chicken Essence - JD Link
Vinegar	Hengshun Zhenjiang Vinegar	500ml	Hengshun Zhenjiang Vinegar - JD Link
Oyster sauce	Haitian Premium Oyster Sauce	700g	Haitian Oyster Sauce - JD Link
Dark soy sauce	Longpai Soy sauce	500ml	Longpai Soy sauce - JD Link
Light soy sauce	Haitian Golden Label Soy Sauce	750ml	Haitian Golden Label Soy Sauce - JD Link
Oil	Arawana Non-GMO Soybean Oil	5L	Arawana Non-GMO Soybean Oil - JD Link
Water starch	Windmill Potato Starch	250g	Windmill Potato Starch - JD Link