TREADMILL USER’S MANUAL

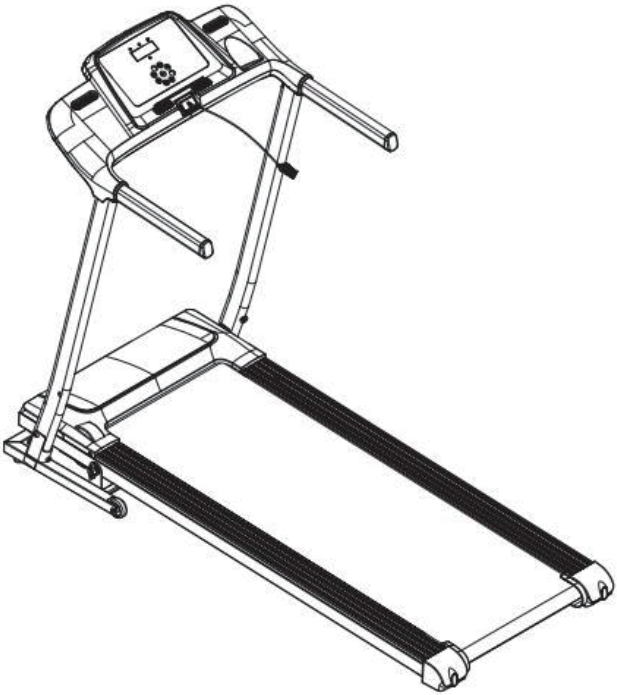

Caution: Please read manual carefully before using the product.

The manual content had revised before print, as we constantly improve the product, so we reserve the right to modify the product specifications, characteristics without prior notice.

Contents

Product Configuration……

Security attention Item…….....

Installing Steps……...

Operation and setup …….....……

Pre-exercise advice……

Maintenance…….....

Frequently Asked Questions ……

Product Configuration

Product Name: Foldable Treadmil

lModel Number:DK-42AI

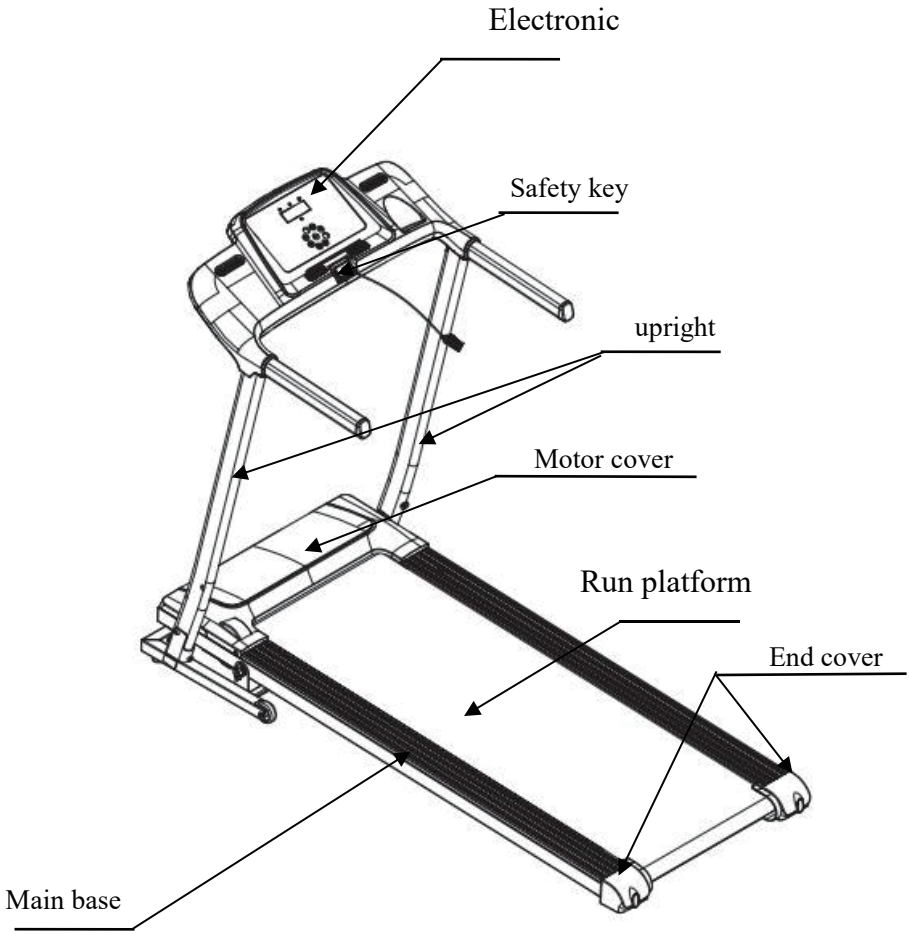

Technical Parameters		
No.	Parameters Name	Electric Treadmill
1	Voltage/Frequency	AC110V
2	Motor horsepower	3.0HP
3	Speed	0.5-8.7MPH
4	Running Area	1200*420MM/47.2*16.5IN
5	Max Allowable weight	120KG/265LBS
6	Expand Size	1473X704X1094mm/58X27.7X43IN
7	Function	Run sport

Parts number list			
No.	Name	Unit	Quantity
1	Main base	Set	1
2	Up right /console	Set	1
3	Accessories Bag	Set	1

Security attention Item

Caution：Please read the instructions carefully before use.

* This Treadmill is for Indoor use and storage, avoid dampness, and do not keep the treadmill near or in contact with water.

*Please wear suitable clothes and sneakers before exercise. Prohibited to exercise on the treadmill barefoot.

*High power plug must be grounded, electric outlet should have a dedicated circuit, do not share with other electrical equipment.

*Keep children away from the machine to avoid accidents.

*Avoid too long time and overload operation, otherwise will cause motor and controller damaged, and will accelerate the deterioration of bearing, running belt and running board. Should maintain machine on a regular basis.

*Keep machine away from dust to avoid strong static.

*Please cut the electric power off after using.

*Please maintain good ventilation when running.

*Please clamp security lock cable on your clothing to make sure the machine stops at emergency condition.

*If you feel not very well when using this machine, please stop and

consult a doctor.

*Silicone oil must be kept away from children after use.

*If power cord is damaged, please contact our qualified maintenance personnel for service of treadmill.

Forbidden

- Don't use the machine in the status of the shell break in or break off (the internal structure exposed or under the condition of welding-parts may fall off.

  ---- Otherwise an accident or injury may happen.

- Don't jump up and down in the process of movement.

  ---- May be injuries caused by the fall.

- Don't keep machine in or near moist space such as the bathroom.

- Don’t place machine in direct sunlight, or high temperature places such as near a stove or a heating appliance.

  ----Otherwise may cause the leakage and burst into flames.

- Don't use when the power cord is damaged or power plug pin is loose.

  ----Otherwise will lead to an electric shock, short circuit or fire.

- Don't damage or bent by force or reverse the power cord. Don’t place heavy objects on machine, don't clamp the power line.

  ----Otherwise will cause fire or get an electric shock.

- Don't use machine for more than 2 people at the same time, and don't get close to the machine when it is in use.

  ---- Or it may be an accident or injury due to falls.

- People who can’t express their consciousness or can’t operate the machine by themselves cannot use the treadmill.

  ----May occur accident or injury.

- Avoid drinking water or pouring water when operation.

  ---- May cause electric shock and fire.

- People who seldom do exercise shouldn't suddenly do intense exercise.

- After eating or when feel tired, do not use machine.

  ---- May lead damage to your health.

- This product is suitable for family use, does not apply to schools, gymnasium and so on. ---- There is the danger of injury.

A. Don’t use when hard objects are in pants pockets.

   ----May cause accident or injury.

B. Don’t use when the power plug is on the needle, garbage, or water. ----May cause electric shock, short circuit, or fire. Do not use with wet hands.

C. When not in use, pull out the power plug from the socket.

----The dust and moisture can age the insulation, and result in leakage fire.

D. This appliance is not intended for use by persons (including children) with reduced physical, sensory or mental capabilities, or lack of experience and knowledge, unless they have been given supervision or instruction concerning use of the appliance by a person responsible for their safety.

E. Children should be supervised to ensure that they do not play with the appliance.

Ground protection system!

F. This product must be grounded. If the machine is dysfunctional, grounding will provide a good channel for electric current, in order to reduce the electric shock risk.

G. This product is equipped with power plug with grounding conductor and plug. Completely insert the plug to standard socket.

H. If the equipment grounding conductor's connection is improper, it will cause electric shock. If you have doubts about whether your product is grounded correct or not, please entrust professional to check.

I. Please use the socket which has the same shape with the grounding plug. Don't use plug adapter.

Installation Steps

When installing, simple fix all screws first, then tighten the screws when the installation of frame is done.

Step 1 (Remove the lock column instrument screw)

Lift the machine out and place it on the horizontal plane, then use the small T-wrench in the accessory kit to remove the 2 M8*70 hexagonal pan head screw, 2 spring washers, 2 washers (reversely removed) below the column , then remove the 2 M8*16 hexagonal pan head screws and 2 spacers on the top of the column (reversely removed)

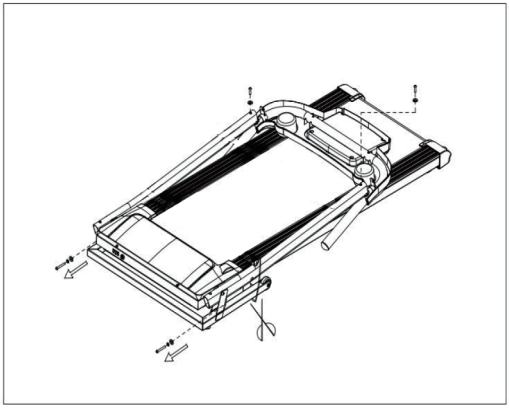

Step 2 (Lift and lock the column)

Raise the column in the direction shown, and then use the two M8*70 hexagonal pan head screws, two spring washers, and two washers that were removed (Step 1) to lock the positions on the front and bottom of the left and right columns(Lock clockwise), then take 2 M8*35 flat head screws in the kit to lock at the left and right positions below the left and right columns (clockwise locking). (Figure 2)

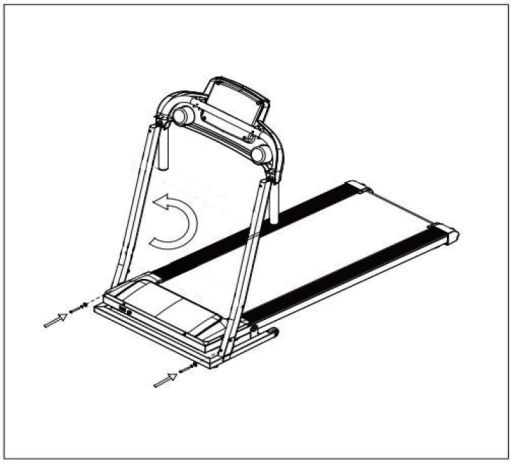

Step 3 (Rotate and lock the electronic watch)

Rotate the electronic watch in the direction shown, then use the 2 M8*16 hexagonal pan head screw and 2 spacers removed (Step 1) to lock at the front end position of the left and right uprights(clockwise locking). (Figure 3)

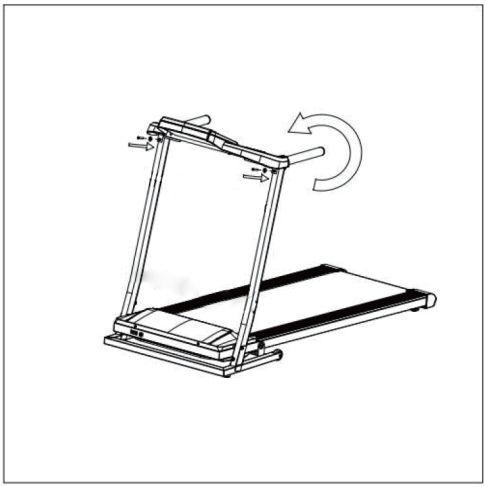

Step 4 (Installing the foldable screw)

Screw is assembled to the part of under frame.When fold treadmill,insert screw to the hole of upright down position to base frame,then it is foldable. (Figure 4)

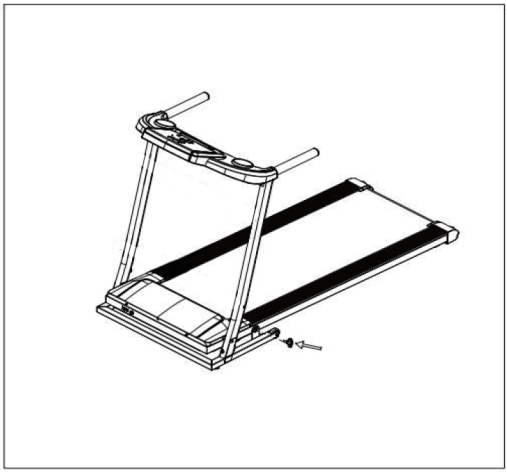

NOTE: Always stand on the side rails when you start the treadmill, never start the treadmill while you are standing on the running belt.

Quick start:

Press the **START/STOP** button on the control panel to start exercise, the screen will count down 3 seconds before the running belt starts moving. The running belt starts moving with an initial speed of 0 . 5 MPH. Press one of the INSTANT SPEED buttons (**2/4/6/8**) on the computer console and on the screen, SPEED will display the speed that you have pressed to 2MPH，4 MPH, 6 MPH or 8 MPH respectively and the running speed will change.

TIME will display your elapsed workout time in minutes and seconds.

DIS.(DISTANCE) will display the accumulative distance travelled during workout.

CAL. (CALORIES) will display the total accumulated calories burned during workout.

START/STOP: Press the START/STOP button to start or stop the treadmill.

SPEED +/SPEED -: The speed of the treadmill can be adjusted up and down between 0.5 and 8 . 7 MPH using the SPEED + and SPEED – keys.

INSTANT SPEED (2/4/6/8): Press one of the INSTANT SPEED buttons (**2/4/6/8**) on the computer console and the screen will display the speed that you have pressed and the running speed will change.

Console Display Overview

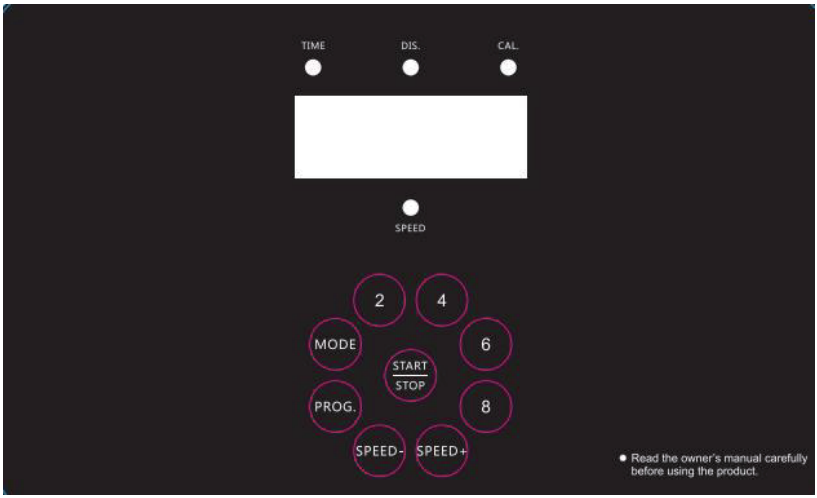

TIME: Displays your elapsed workout time in minutes and seconds. Time starts counting up from 5:00 to 99:00 per 1 second increment. You may also pre-set target time in STOP MODE-H1 before training.

DISTANCE: Displays the accumulative distance travelled during workout. Distance starts counting up from 0.5 to 999.9 miles You may also pre-set target distance in STOP MODE-H2 before training.

CALORIES: Displays the total calories burned during your workout. Calorie starts counting up from 10 to 9999 calories You may also pre-set target calories in STO P MODE-H3 before training.

MODE

H-1 Time mode: The split window of TIME begins blinking. The initial pre-set target time is 15:00 minutes. Press the SPEED+/SPEED- button on the computer console to change the setting. The pre-set training program time range is from 5:00 to 99:00 minutes. Once you select training time, press the START/STOP button on the console to start exercise, the screen will countdown 3 seconds before the running belt starts

moving. When the pre-set training program time counts down to 0, the computer will beep to alert you, the treadmill will stop automatically.

H-2 Distance mode: The split window of DISTANCE begins blinking. The initial pre-set target distance is 1 mi. Press the SPEED+/SPEED- button on the computer console to change the setting. The preset training program distance range is from 0.5 mi to 99.9 mi. Once you pre-set training program distance, press the START/STOP button on the computer to start exercise, the screen will countdown 3 seconds before the running belt starts moving. When the pre-set training program distance counts down to 0, the computer will beep to alert you, the treadmill will stop automatically.

H-3 Calories mode: The split window of CALORIES begins blinking. The initial pre-set target calories are 50. Press the SPEED+/SPEED- button on the computer console to change the setting. The pre-set training program calories range is from 10 to 999. Once you pre-set training program calories, press the START/STOP button on the computer to start exercise, the screen will countdown 3 seconds before the running belt starts moving. When the pre-setting program calories counts down to 0, the computer will beep to alert you, the treadmill will stop automatically.

PROGRAM:

The computer offers 12 pre-set programs which vary the speed and incline of your workout over a 20-minute time period. The treadmill must not be running to select a program. Press the PROG button on the computer console to select training program.

Pre-exercise advice

Warm-up

Take warm-up exercise for 5 to 10 minutes before using this machine each time.

Breathing

When exercising, you can't hold your breath, usually inhale with nose when intending to release actions, and exhale with mouth. Inhaling should be coordinated with exhaling. If breathing too fast, you should stop exercising immediately.

Frequency

After the exercise of the same parts of the muscles, this part should have 48 hours' rest. That is to say, it only can be exercised every other day.

Load

Decide the training volume based on the training state of everyone's physical fitness, and then exercise according to the progressive overload principle. At the first exercising stage, muscles soreness is normal and can be eliminated by keep exercising.

Diet

To protect digestive system, exercise should be taken one hour after a meal. Eating should be done at least half an hour after exercising. When exercising, drink less water, and especially avoid drinking much so as not to increase the burden of heart and kidney.

Stretching exercise

Whatever your running speed is, you'd better do stretch exercise first. Warn muscles are easier to stretch, so walk for 5 to 10 minutes to warn up. Next, stop to do stretching exercise for five times according to the following methods, 10 seconds or more for each leg, and do again after exercising.

1. Stretching downward

Slightly bend knees, and slowly bend the body down. Relax back and shoulders, touch the legs and toes as close as possible with hands, keep for 10~15 seconds and then relax. Repeat for three times. (see picture 1)

2. Hamstring stretching

Sit on a clean cushion, stretch one leg straight, bend the other leg inside to cling to the inner side of the straight leg, touch the legs and toes as close as possible with hand, keep for 10~15 seconds and then relax. Repeat for three times for each leg. (see picture 2)

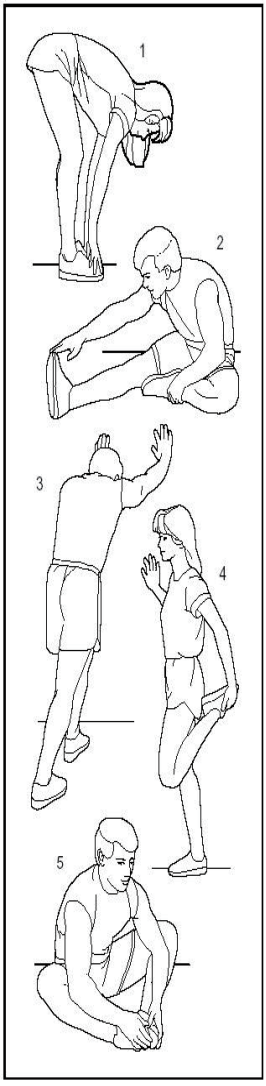

3. Shank and heel tendon stretching

Stand with two hands on the wall or desk and one foot backward. Keep back-leg upright and its heel touching the ground, lean toward to the wall or desk, keep for 10~15 seconds and then relax. Repeat for three times for each leg. (see picture 3)

4. Leg muscles stretching

Put the right hand on the wall or desk, then stretch the left hand backward, hold the left ankle and pull it upward to the hip until you feel the front muscles of the upper leg is tense, pull for about 10~15 seconds and then relax. Repeat for three times for each leg. (see picture 4)

5. Sartorius (inner side muscles of leg) stretching

Sit down with leg bottom against each other and knees outward, hold feet with hands, pull toward to abdominal groove, keep for 10~15 seconds and then relax. Repeat for three times. (see picture 5).

Maintenance

Lubricating

The running belt must be lubricated with specially configured methyl silicone oil after used for a period of time.

1. Advice:

When use time a week is less than 3 hours, it should be lubricated once in five months.

When use time a week is between 4-7 hours, it should be lubricated once in two months.

When use time a week is more than 7 hours, it should be lubricated once in one month.

It can't be over-lubricated. It is not the more lubricant, the better. Remember: proper lubricating is the important factor to increase the treadmill's service time.

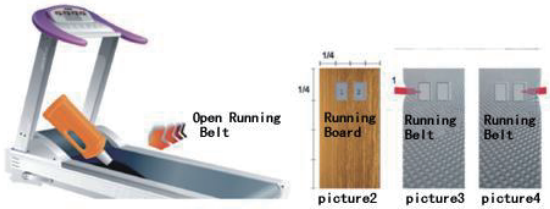

2. Lubricating methods

For the methods to examine whether it is needed lubricant, you only need catch up the running belt and touch the central part of the back of the belt with hand as nearly as possibly. If the belt is with silicon resin (a bit sense of dampness) inside, this means no lubricant is needed; if the running board is dry and you feel no silicon resin inside, this means lubricant is needed.

A. Steps for coating the running board with lubricant: (see the picture)

B. Stop the rotation of the running belt and fold the machine.

C. Pick up the belt on the back of the body frame: stretch the oil holder as nearly as possible into the moving place of the belt, coat the inner side of the belt with silicone oil and coat both sides of the belt with silicone resin, and then operate the treadmill at the speed of 1KM/H so as to evenly coat the silicone resin; and step on the belt from left to right for a few minutes, then the silicone resin will be completely absorbed by the

belt.

Also you can add oil to the lubrication hole of rail directly.Same as the photo shows.

3. Running belt tension adjustment

All treadmill's belts should be adjusted before leaving the factory and after the installation, however, after it is used for a period, looseness may occur. For example: when users are running, it may occur pause and slip, if which happens, adjust the belt and bolts synchronously from both the left and right side in a clockwise direction and with semicircle as the unit; if the running belt is too loose, it may occur slip between the belt and the roller when treading on the belt; but if too tight, it will be easy to increase the motor load and damage motor, running belt, roller, etc.

4. Running belt deviation adjustment

All treadmill's belts should be adjusted before leaving the factory and after the installation, however, after it is used for a period, it may occur belt deviation, which is caused by the following reasons:

a) The main engine is not placed evenly.

b) The user's feet are not on the center of running belt.

If the deviation phenomenon is caused by the uneven force of the user's feet, no-load rotation for a few minutes can make it normal. For deviation phenomenon that can't return to normal automatically, adjust step by step by using 6MM inner hexagon spanner with the machine and with quarter-circle as the unit. Running belt deviation is not covered in the warranty scope and is mainly maintained by users according to the instruction book. Deviation phenomenon will severely damage the running belt, so it should be found and corrected in time.

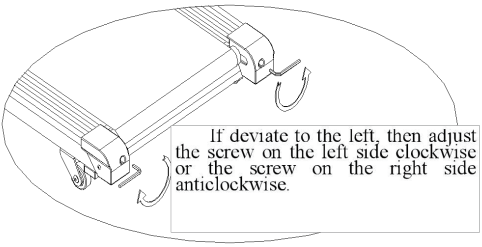

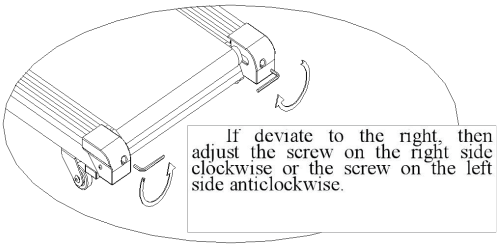

5. Driving belt adjustment

All the treadmill's driving belts are adjusted before leaving the factory, but after using for a period, it may still occur slip, which is mainly adjusted by users. Adjustment steps (see the picture):

1. Clockwise rotate adjustment screw with spanner.
2. Adjustment scope is subject to no slip when loading.

Notice: Periodically clean the impurities in the belt groove and the belt wheel groove.

6. Treatment method of running belt slip or pause

First open the front motor cover, then open the treadmill, hold the hand grip with both hands, step on the belt hard with your feet, watch it is the conveyor belt of the motor that pauses or the running belt that pauses. If running belt pauses, adjust the running belt, while if conveyor belt of the motor pauses, adjust the motor.

Troubleshooting and Maintenance

Fault Code	Main reason	Solution
Treadmill not working	A. No power	Plug in to get power
	B.Safety key off	Put on safety key
	C.Connection wire not work well	Check all connection wire
Belt not running smoothly	A.Lubrication oil is less	Add some silicon oil
	B.Running belt is too tight	Loosen running belt
E01	The wire from computer to bottom control board didn't connected well	1. If communication between the electrical control and screen is obstructed, check each connection of the communication line from the screen to the lower control, ensuring that each wire is properly connected. 2. Check if there is any wire damage between the screen and controller, and replace the communication line if necessary.
E02	IGBT breakdown or motor open circuit (DC brushless motor is over-voltage, under-voltage)	1. Check if the power supply voltage is below 50% of the normal voltage, and retest using the correct voltage specifications. 2. Check if there is any abnormal odor coming from the controller, and replace it if necessary. 3. Check if the motor wires are properly connected, and reconnect if needed.
E03	Speed sensor fail	1. If no speed sensor signal is detected for 5-8 seconds, check whether the sensor plug is properly connected or damaged, and reconnect or replace the sensor accordingly.

		2. Check if there is any abnormal odor coming from the controller, and replace it if necessary. 3. If there is no motor input signal detected for 5-8 seconds, check whether the motor wires are properly connected or if the motor is defective.
E05	Over-current Protection	1. The system may be drawing excessive current due to the load being over the rated capacity, triggering the protective shutdown. The system can be restarted after a complete shutdown. 2. If a certain part of the treadmill becomes stuck, it can cause the motor to be unable to rotate normally, resulting in excess load and current flow. This may trigger the system protection and shut down the system. To resolve this issue, the treadmill needs to be adjusted and once done, the system can be restarted for normal operation. 3. Inspect the motor for any signs of excessive noise or a burning smell during operation. If such signs are present, it may indicate a faulty motor that needs to be replaced. 4. Check if there is any burnt smell coming from the components of the controller. If any components show signs of damage, it may indicate a faulty controller that needs to be replaced. 5. Inspect if the power supply voltage are incorrect or lower than required. Use the appropriate voltage and retest the machine. For DC brushless machines, also check if the motor wires are

		properly connected..
E07 or “--”	Safety key off	1. Simply plug in the safety key. 2. Check if the reed switch or contact blade and their connecting wires are damaged.
E08	Driver failure (internal self-test error 'driver overheating)	1. Wait for a period of time, then restart the power after it has cooled down. (Only applicable for brushless controllers.) 2. The controller is faulty. Replace the controller.
E09	Communication failure	If the lower-level controller is not receiving signals from the higher-level controller, replace the communication cable and check if the communication port is functioning properly.
E10	Motor open circuit	1. Check whether the motor wires are properly connected, and reconnect if necessary. 2. Check if the motor brushes are stuck.

FCC Statement:

This device complies with part 15 of the FCC Rules. Operation is subject to the following two conditions: (1) This device may not cause harmful interference, and (2) this device must accept any interference received, including interference that may cause undesired operation.

This equipment has been tested and found to comply with the limits for a Class B digital device, pursuant to part 15 of the FCC Rules. These limits are designed to provide reasonable protection against harmful interference in a residential installation. This Equipment generates,uses and can radiate radio frequency energy and,if not installed and used in accordance with the instructions,may cause harmful interference to radio communications.However,there is no guarantee that interference will not occur in a Particular installation.If thise quipment does cause harmful interference to radio or television reception, which can be determined by turning the equipment off and on, the user is encouraged to try to correct the interference by one or more of the following measures:

—Reorient or relocate the receiving antenna.

—Increase the separation between the equipment and receiver.—Connect the equipment into an outlet on a circuit different from that to which the receiver is connected.

—Consult the dealer or an experienced radio/TV technician for help.

Caution: Any changes or modifications not expressly approved by the party responsible for compliance could void the user's authority to operate the equipment.

This equipment complies with FCC radiation exposure limits set forth for an uncontrolled environment. This transmitter must not be co-located or operating in conjunction with any other antenna or transmitter.

The antenna(s) used for this transmitter must be installed to provide a separation distance of at least 20 cm from all persons and must not be collocated or operating in conjunction with any other antenna or transmitter,End-Users must be provided with transmitter operation conditions for satisfying RF exposure compliance.