Use instruction

✻ Thank you for choosing our toy R/C car. To ensure correct and pleasing operations, please read through the following use instruction and have enough understanding of the product before use.

⚠ CAUTION:

- **ELECTRICALLY OPERATED PRODUCT**

Not recommended for children under 8 years of age. As with all electric products,precautions should be observed during handling and use to prevent electric shock.

- **ADULT SUPERVISION REQUIRED.**

Warning: Changes or modifications to this unit not expressly approved by the party responsible for compliance could void the user's authority to operate the equipment.

Contents: VehicleX1 Transmitter controller X1

Transmitter and Vehicle operation

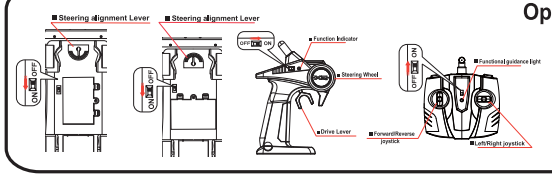

Operations Tips:

- Please make sure the power switch is in the ON position when you operate, and OFF position when not in use.
- If the car direction goes left, please adjust Steering alignment Lever to right until the car goes straight.
- If the car direction goes right, please adjust Steering alignment Lever to left until the car goes straight.

How to install the Battery- Transmitter and Vehicle

1.Loosen battery cover with a snap.(See picture 1)
2.Install two AA batteries with polarity(+/-) as shown inside battery compartment.(See picture 2)
3.Install request AA/AAA batteries inside the battery compartment.(See picture 3)
4.Tighten battery cover with a battery snap.

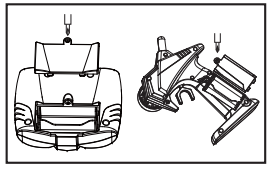

picture 1

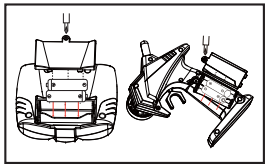

picture 2

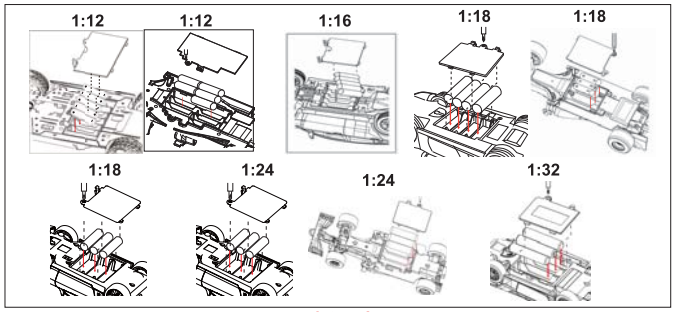

picture 3

How to play?

1.Install the AA/AAA batteries inside the battery compartment that is underneath the chassis, taking care to observe the polarity. Fit back the cover.
2.Insert AA battery inside the controller. The Car is now ready to run.
3.Switch the car ON at the ON/OFF switch. Then switch on the controller, the LED light will flash rhythmically. After a few seconds, the LED light on the controller will stop flashing, meaning the bind has been made.
4.If the cars does not run in a straight line adjust the steering alignment lever located beneath the chassis.
5.When the light in the controller begins to dim, it may be time to replace the AA battery.
6.When your R/C model car begins to lose performance, power or function, it may be time to replace the AA/AAA batteries.

Battery Performance Note

For best performance, use alkaline batteries. Battery life will vary according to brand.

Battery Safety Information

1. Don't mix old and new batteries. Always replace all batteries at the same time.
2. Don't mix batteries of different types.(Alkaline, standard batteries or rechargeable batteries).
3. Insert the "AA" batteries with their polarity(+/-) as shown inside the battery compartment.
4. Don't short-circuit terminals.
5. Don't recharge non-rechargeable batteries. Rechargeable batteries may only be charged under the supervision of an adult.
6. Remove all batteries if vehicle will not be used for a long period of time.
7. Dispose of batteries safely. Don't dispose of batteries in fire as they may explode.
8. Exhausted batteries are to be removed from the toy.
9. Keep these instructions for future reference: they contain important information.
10. Packaging has to be kept since it contains important information.
11. Rechargeable batteries are to be removed from the toy before being charged.

Care and Maintenance

1. Always remove batteries from the toy when it is not being used for a long period of time.
2. Wipe the toy gently with a clean damp cloth.
3. Keep the toy away from direct sunlight and/or direct heat.
4. Do not submerge the toy into water that can damage the electronic assemblies.

Remark

1.Please do not turn on two machines at the same time, otherwise the code will detect at the same channel.
2. If you want to play one more car at the same time, please refer " How to play" and do the detect one by one.

© GuangDong Xin Yu Technology Industrial Co., LTD
Made in China

4.02.RC18-1AA.01-32

FCC Caution

This device complies with part 15 of the FCC Rules. Operation is subject to the following two conditions:
(1) This device may not cause harmful interference, and
(2) this device must accept any interference received, including interference that may cause undesired operation.

Any Changes or modifications not expressly approved by the party responsible for compliance could void the user's authority to operate the equipment.

Note: This equipment has been tested and found to comply with the limits for a Class B digital device, pursuant to part 15 of the FCC Rules. These limits are designed to provide reasonable protection against harmful interference in a residential installation. This equipment generates uses and can radiate radio frequency energy and, if not installed and used in accordance with the instructions, may cause harmful interference to radio communications. However, there is no guarantee that interference will not occur in a particular installation. If this equipment does cause harmful interference to radio or television reception, which can be determined by turning the equipment off and on, the user is encouraged to try to correct the interference by one or more of the following measures:
-Reorient or relocate the receiving antenna.
-Increase the separation between the equipment and receiver.
-Connect the equipment into an outlet on a circuit different from that to which the receiver is connected.
-Consult the dealer or an experienced radio/TV technician for help.

The device has been evaluated to meet general RF exposure requirement. The device can be used in portable exposure condition without restriction.