Lutopix

Smart Camera - AM108

Please scan the above QR code for other languages

In the box

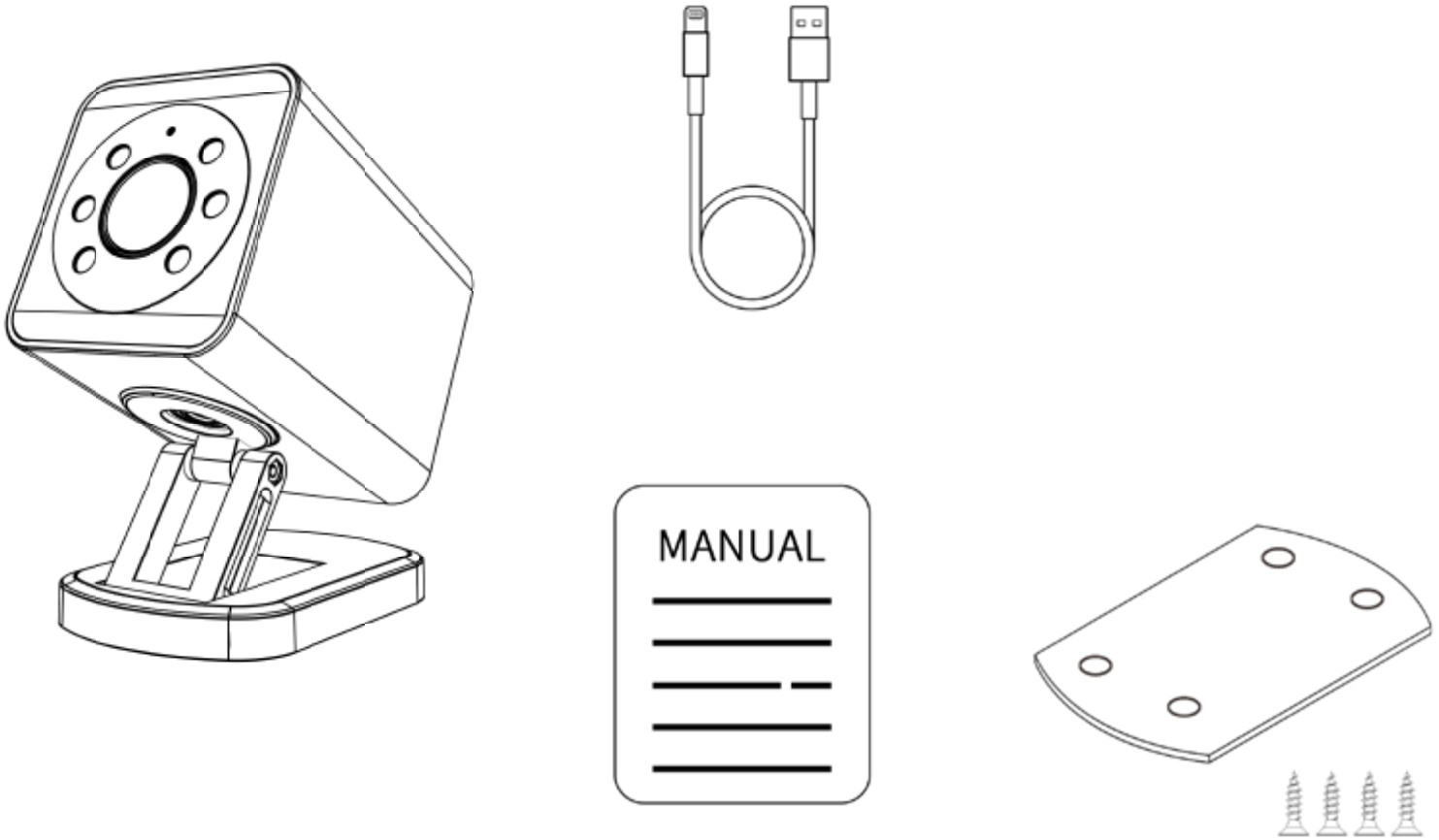

Camera	x1
Power connection cable (USB + TYPE C)	x1
Bottom base steel plate	x1
Screw bag	x1
User manual	x1

Parameter

Product name:Smart Camera

Product model: AM108

Maximum resolution: 2304*1296

Lens specifications: HD lens 2.8mm@F2.0

Viewing range: horizontal 120°, vertical 105°

Day / Night: support IR-CUT automatic switching

NETCOM: WIFI 802.11 b/g/n/a 2.4G+5G

Storage: cloud storage / T card storage compatible

Power supply: 5V DC - 24V DC(±10%)

Speaker: 2W digital speaker

Microphone: 2 * MIC digital noise reduction

Temperature range: -10°C - ＋ 50°C

Class of protection: IP66

Net weight: 450g

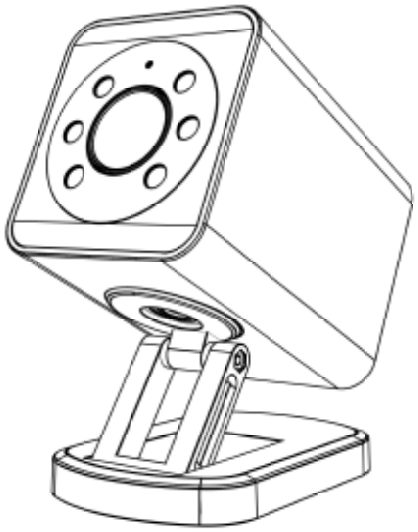

+

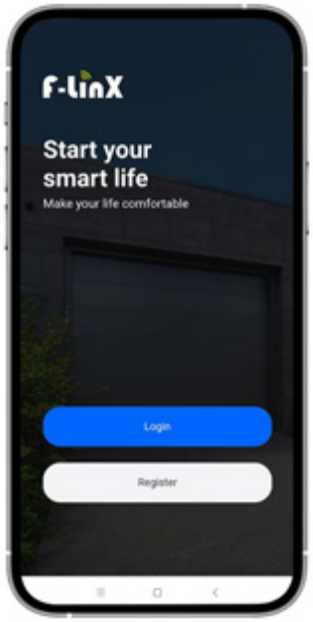

1) Scan the QR code below by your smart phone to download the APP, register and login.
2) To connect to the APP, follow steps 1 - 6, to install & wire, follow steps 7-9.

IOS

GOOGLE PLAY

1

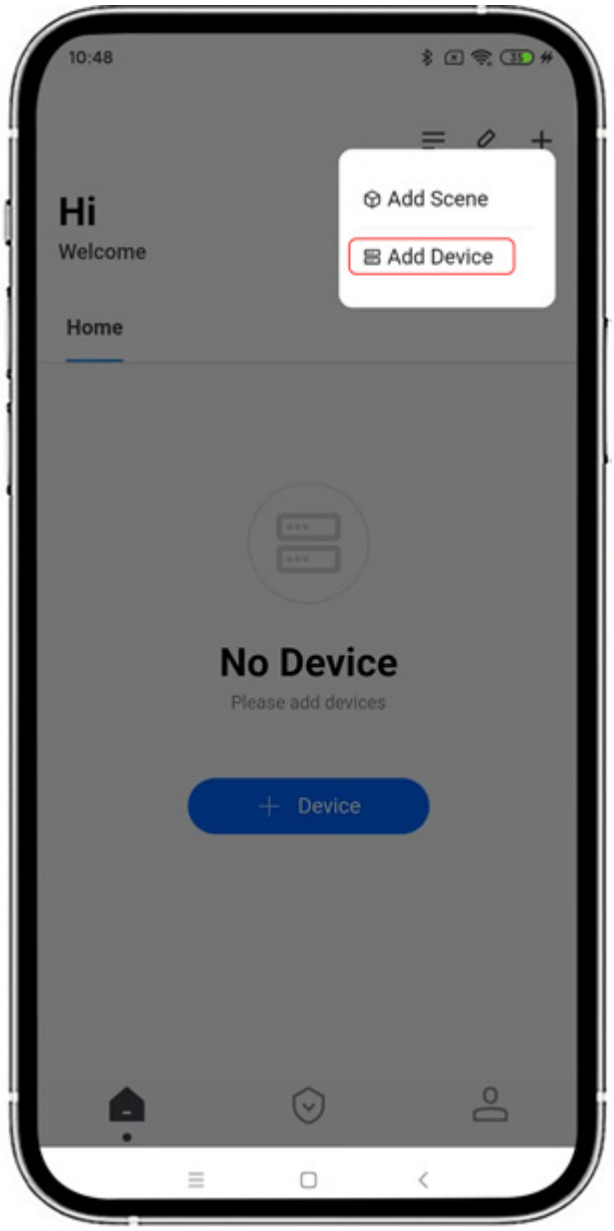

Click add device

2

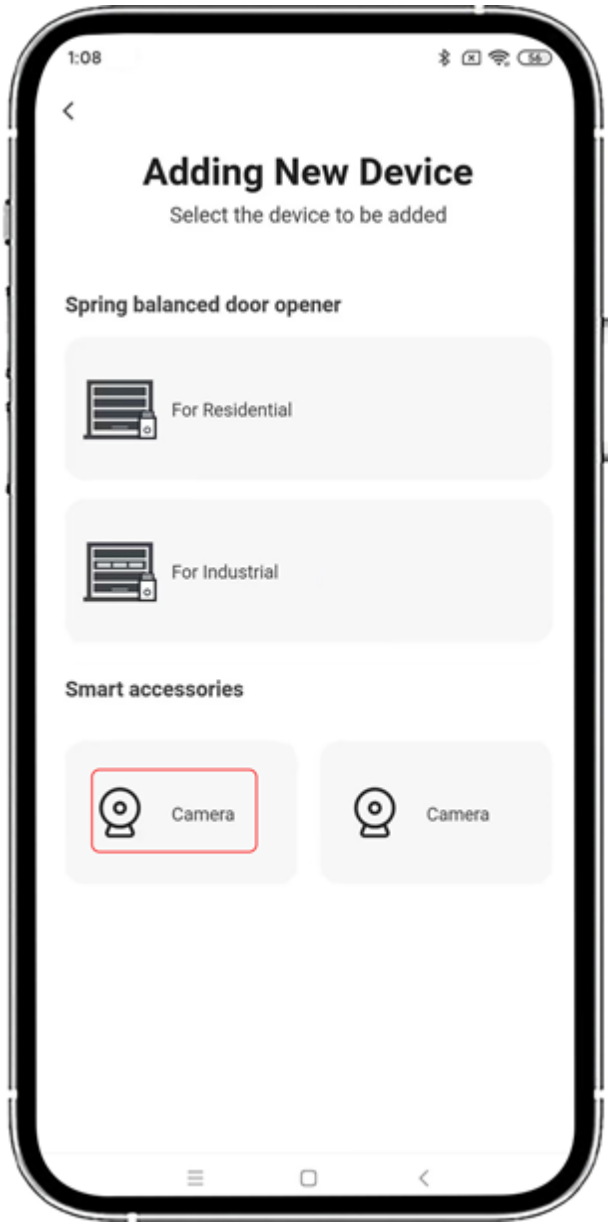

Click camera

❸

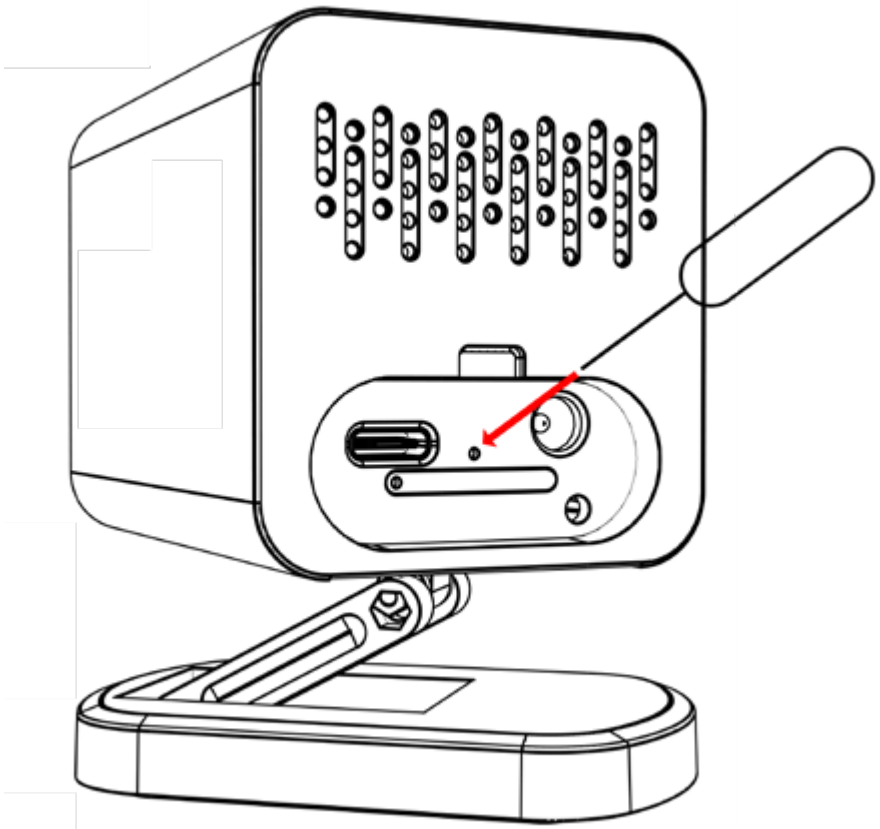

Reset the device

❹

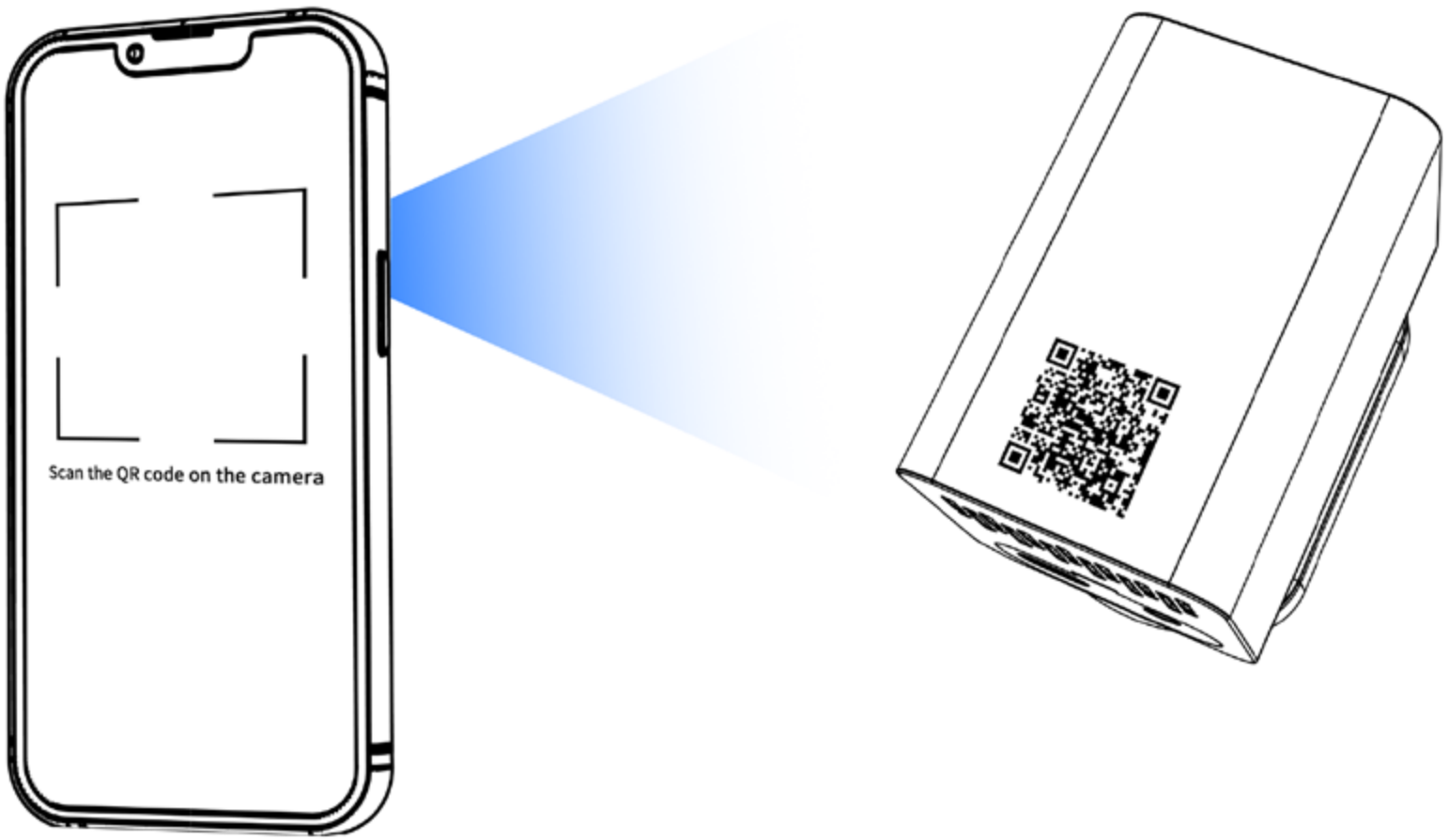

Scan the QR code on the camera

❺

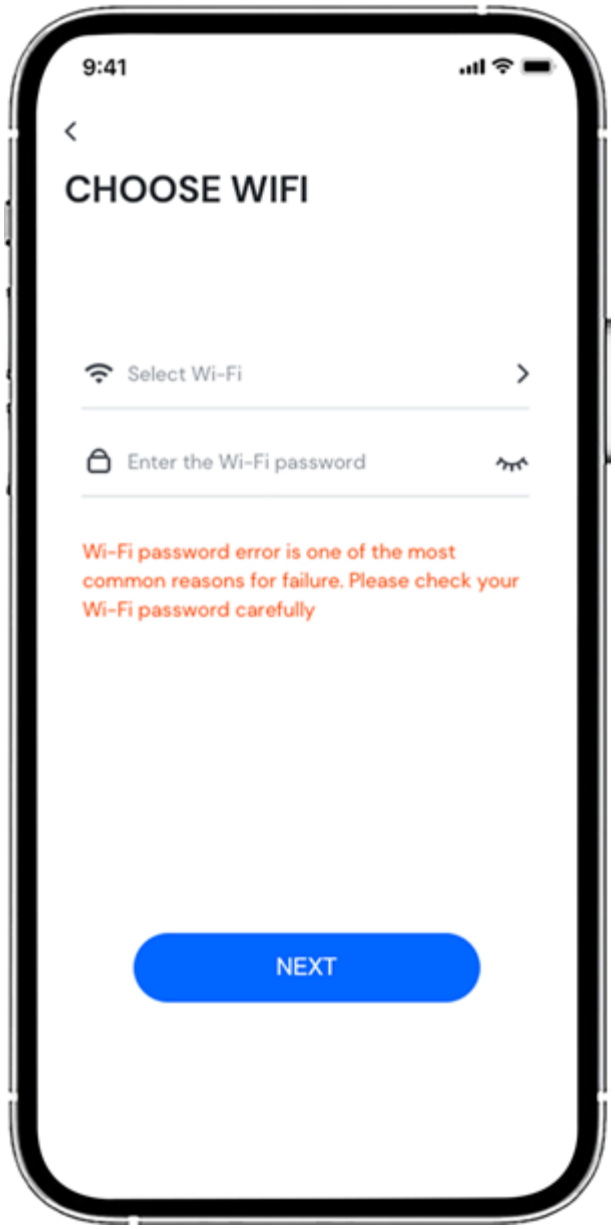

Select the Wi-Fi & enter password then press 'NEXT', there will be a QR code shown on your cell phone.

❻

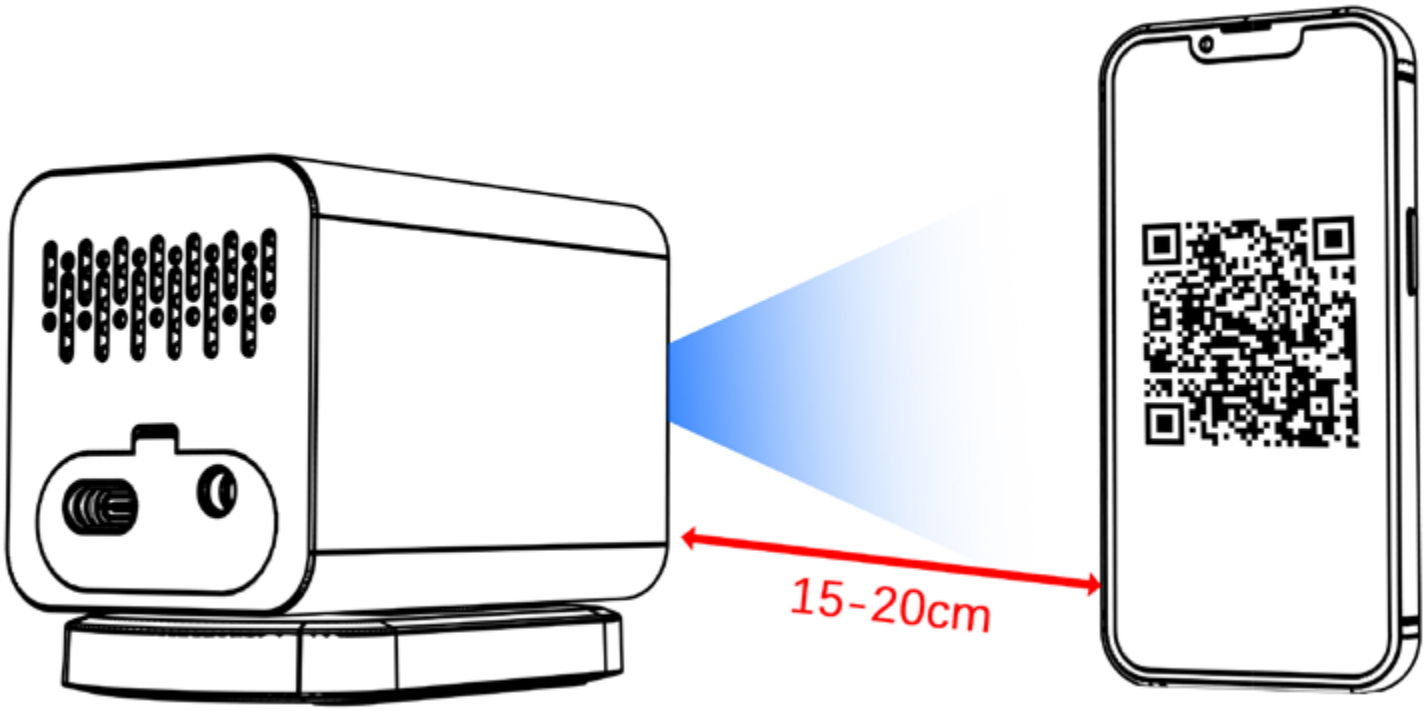

Use the camera to scan the QR code that appears on your phone. The scan is successful when you hear 'di'. The camera will configure network automatically, this process will take about 20 seconds.

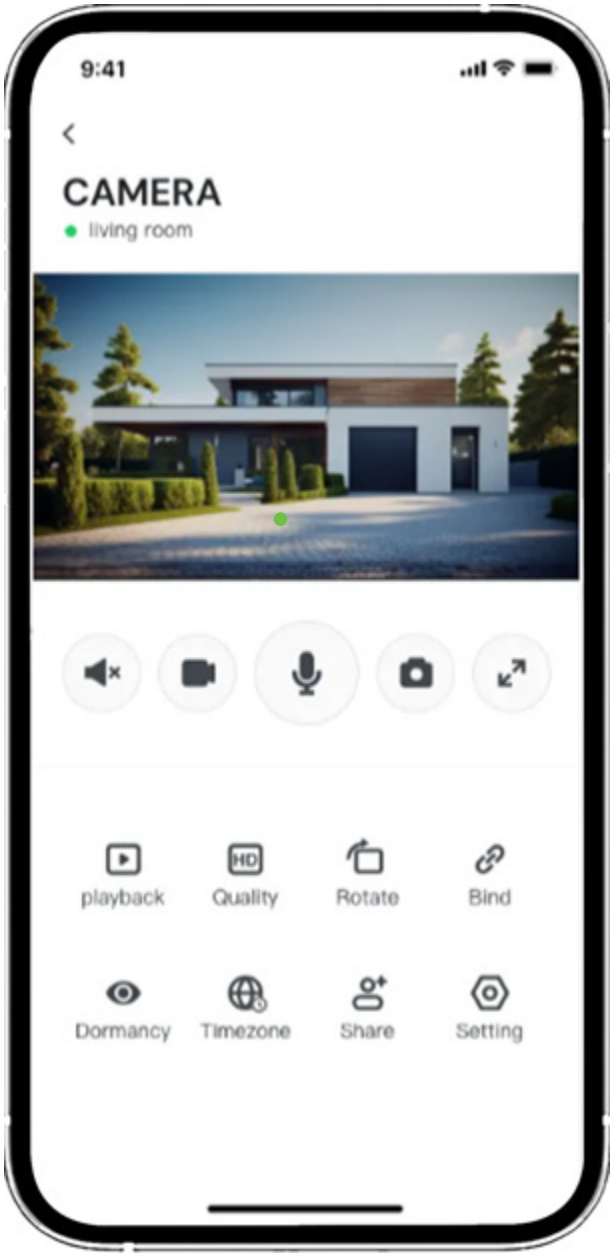
9:41
CAMERA
living room
playback
Quality
Rotate
Bind
Dormancy
Timezone
Share
Setting

Successful

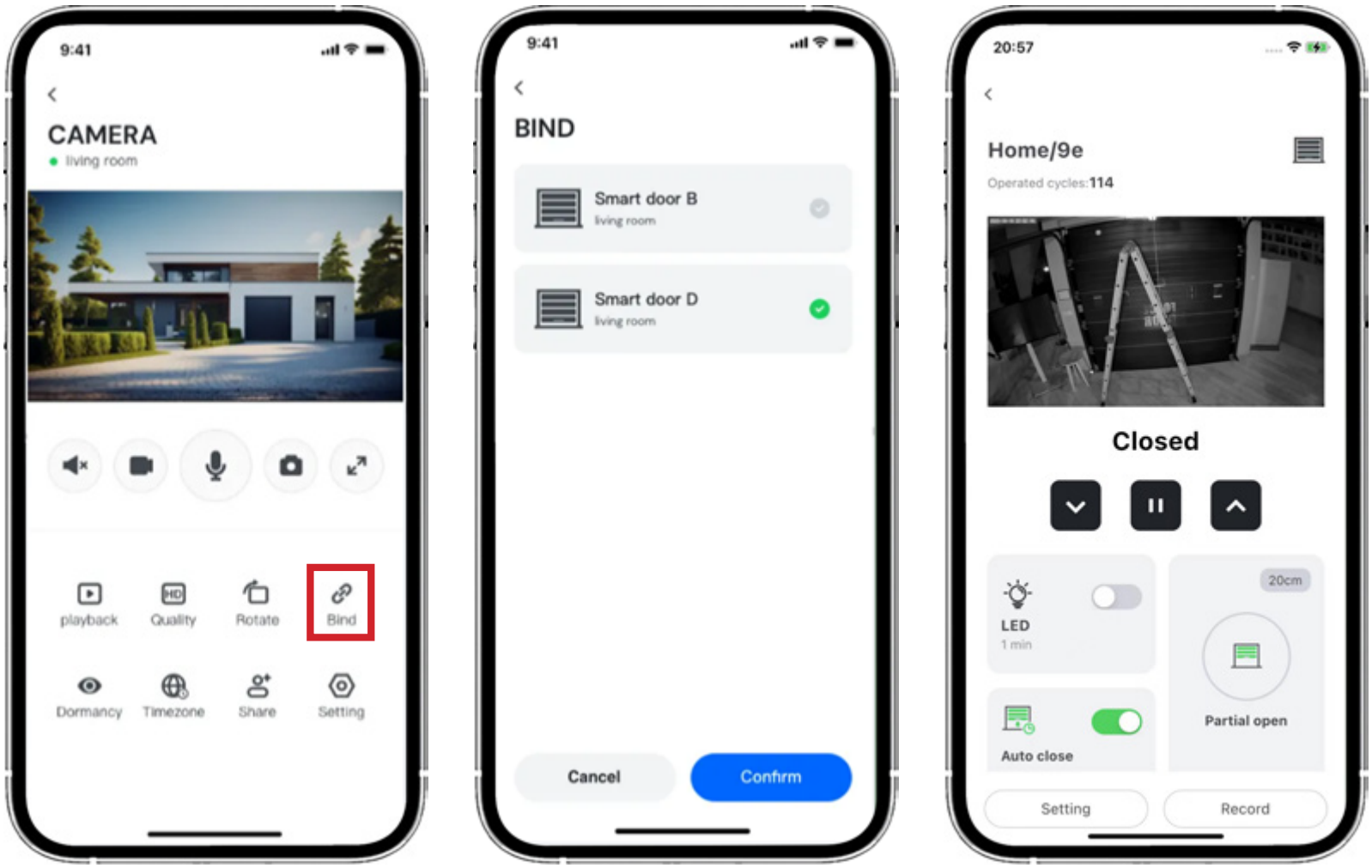

Bind the camera to door opener

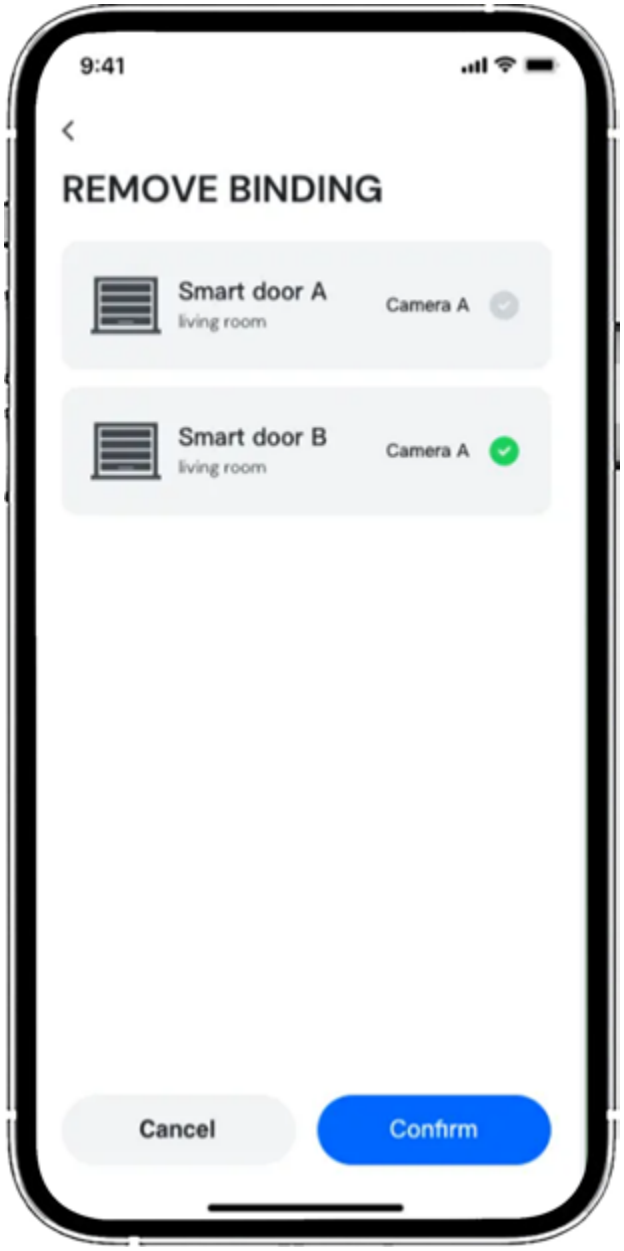

Remove binding

7

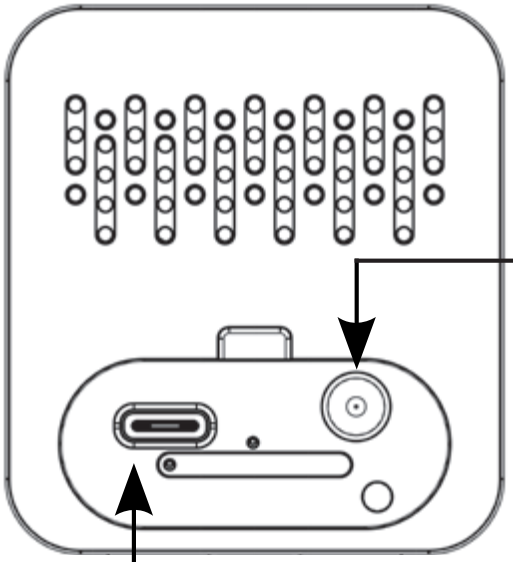

Power adapter port

Type C port

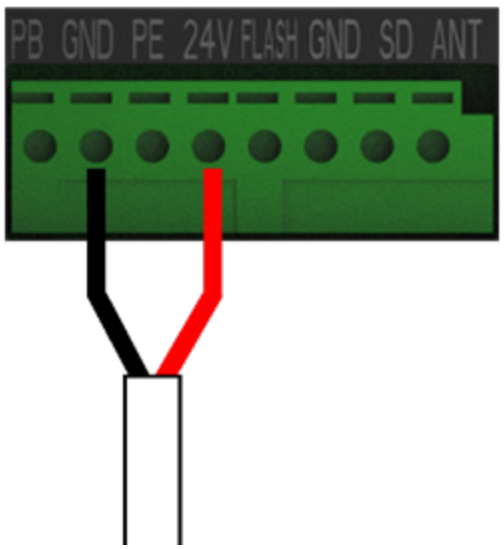

Power connection from camera to opener

❽

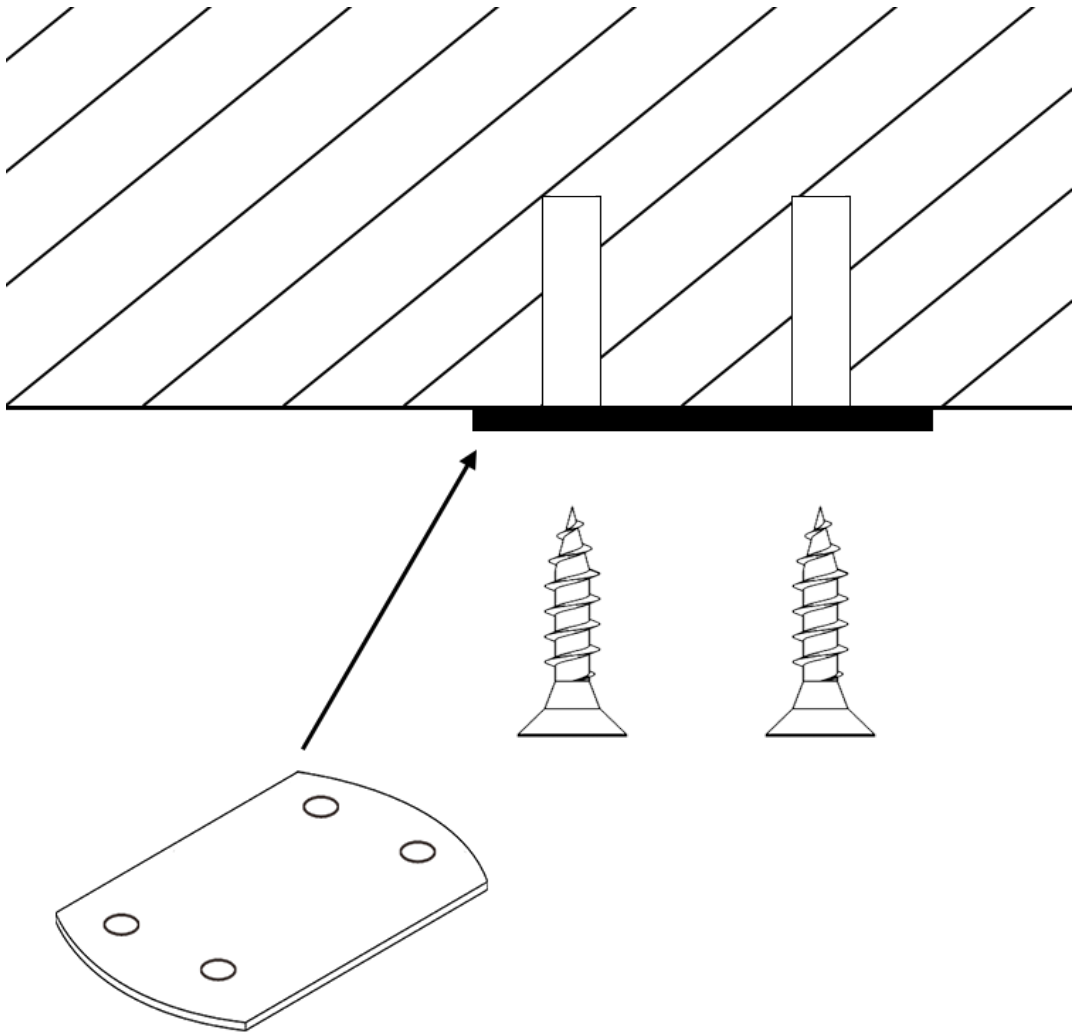

Install the steel plate

❾

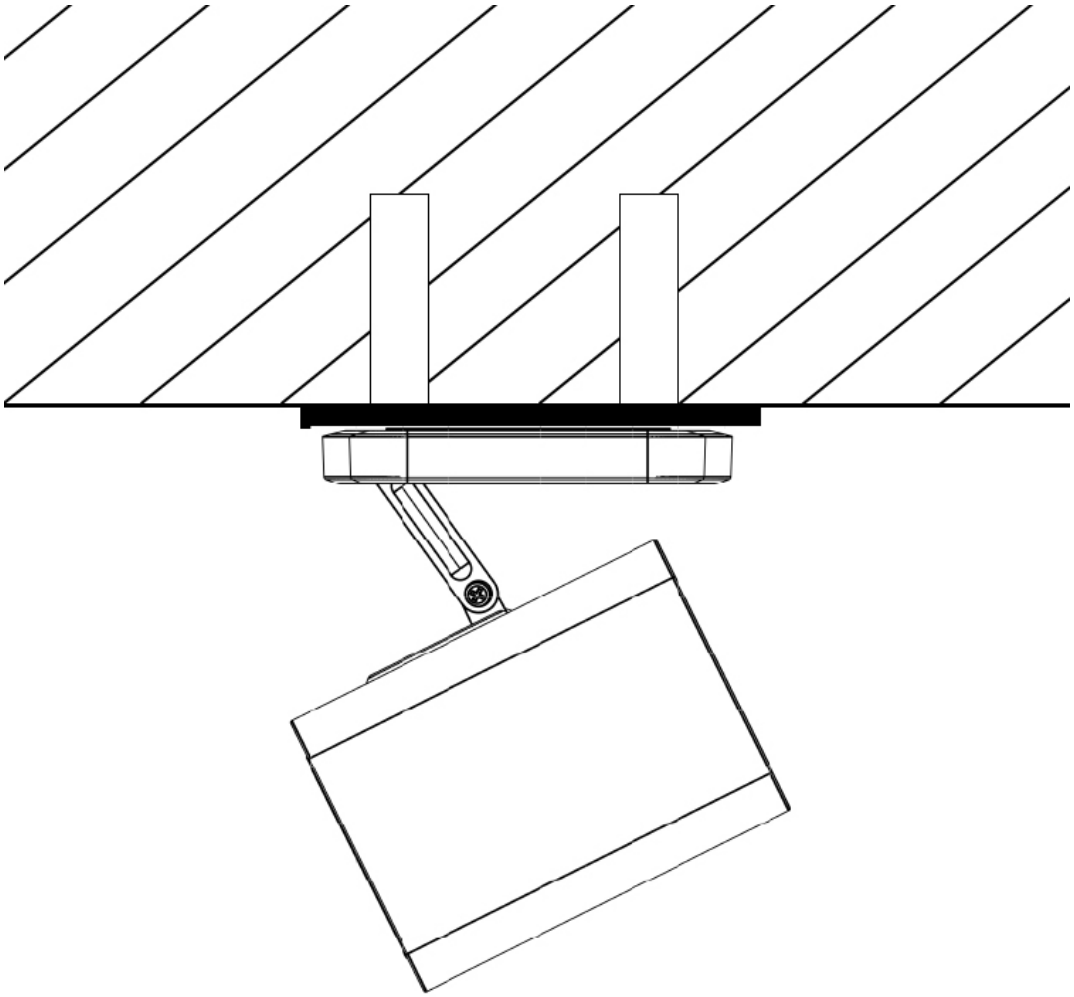

Set the camera

IOS

GOOGLE PLAY

Video center

FCC WARNING

This device complies with part 15 of the FCC Rules. Operation is subject to the following two conditions:
(1) this device may not cause harmful interference, and (2) this device must accept any interference received, including interference that may cause undesired operation.
Any changes or modifications not expressly approved by the party responsible for compliance could void the user's authority to operate the equipment.
NOTE: This equipment has been tested and found to comply with the limits for a Class B digital device, pursuant to Part 15 of the FCC Rules. These limits are designed to provide reasonable protection against harmful interference in a residential installation. This equipment generates, uses and can radiate radio frequency energy and, if not installed and used in accordance with the instructions, may cause harmful interference to radio communications. However, there is no guarantee that interference will not occur in a particular installation.
If this equipment does cause harmful interference to radio or television reception, which can be determined by turning the equipment off and on, the user is encouraged to try to correct the interference by one or more of the following measures:
-- Reorient or relocate the receiving antenna.
-- Increase the separation between the equipment and receiver.
-- Connect the equipment into an outlet on a circuit different
from that to which the receiver is connected.
-- Consult the dealer or an experienced radio/TV technician for help.
To maintain compliance with FCC’s RF Exposure guidelines.
This equipment should be installed and operated with minimum distance between 20cm the radiator your body: Use only the supplied antenna.

Manufacturer's Name: ShenZhen bitdoor Technology Co., Ltd.
Address: Room 613A, XiWan building, No.15th Jin Hai Road, XiXiang Street, BaoAn District, Shenzhen City, China
Applicant’s Name: ShenZhen bitdoor Technology Co., Ltd.
Address: Room 613A, XiWan building, No.15th Jin Hai Road, XiXiang Street, BaoAn District, Shenzhen City, China

Product Name: Smart Camera
Trade Mark: N/A
Model number: AM108

This device is in compliance with the essential requirements and other relevant provisions of Directive 2014/53/EU. All essential radio test suites have been carried out. The device complies with RF specifications when the device used at 20cm from your body. The product shall only be connected to a USB interface of version USB2.0

RF Specification:

Function	Operation Frequency	Max RF outputpower:	Limit
WIFI 2.4G	2412-2472MHz;	17.32 dBm	20 dBm.
WIFI 5.2G	5180-5240MHz;	12.49 dBm	23 dBm.
WIFI 5.3G	5260-5320MHz;	11.23 dBm	23 dBm.
WIFI 5.6G	5500-5700MHz;	12.45 dBm	23 dBm.
WIFI 5.8G	5745-5825MHz;	12.99 dBm	13.98 dBm.

EU Declaration of Conformity

We, ShenZhen bitdoor Technology Co., Ltd. (Room 613A, XiWan building, No.15th Jin Hai Road, XiXiang Street, BaoAn District, Shenzhen City, China) hereby declares that this Wireless camera is in compliance with the essential requirements and other relevant provisions of Directive 2014/53/EU.

The use for 5.15-5.35GHz RLAN band is restricted to indoor use. This restriction will be applied to all Member States of European Union.

	BE	BG	CZ	DK	DE	EE	IE	EL
	ES	FR	HR	IT	CY	LV	LT	LU
	HU	MT	NL	AT	PL	PT	RO	SI
	SK	FI	SE	NO	IS	LI	CH	TR