LCUR57-WWD Hardware Design

LTE-A Series

Version: 1.0.0

Date: 2024-04-07

Status: Preliminary

Our aim is to provide timely and comprehensive services to our customers. If you require any assistance, please contact our headquarters:

NetPrisma US INC.
100 N HOWARD ST STE R, SPOKANE, WA, 99201
Email: Info@netprisma.us

Or our local offices. For more information, please visit:
https://www.netprisma.us/sales-support/.

For technical support, or to report documentation errors, please visit:
https://www.netprisma.us/tech-support/.
Or email us at: support@netprisma.us.

Legal Notices

We offer information as a service to you. The provided information is based on your requirements and we make every effort to ensure its quality. You agree that you are responsible for using independent analysis and evaluation in designing intended products, and we provide reference designs for illustrative purposes only. Before using any hardware, software or service guided by this document, please read this notice carefully. Even though we employ commercially reasonable efforts to provide the best possible experience, you hereby acknowledge and agree that this document and related services hereunder are provided to you on an “as available” basis. We may revise or restate this document from time to time at our sole discretion without any prior notice to you.

Use and Disclosure Restrictions

License Agreements

Documents and information provided by us shall be kept confidential, unless specific permission is granted. They shall not be accessed or used for any purpose except as expressly provided herein.

Copyright

Our and third-party products hereunder may contain copyrighted material. Such copyrighted material shall not be copied, reproduced, distributed, merged, published, translated, or modified without prior written consent. We and the third party have exclusive rights over copyrighted material. No license shall be granted or conveyed under any patents, copyrights, trademarks, or service mark rights. To avoid ambiguities, purchasing in any form cannot be deemed as granting a license other than the normal non-exclusive, royalty-free license to use the material. We reserve the right to take legal action for noncompliance with abovementioned requirements, unauthorized use, or other illegal or malicious use of the material.

Trademarks

Except as otherwise set forth herein, nothing in this document shall be construed as conferring any rights to use any trademark, trade name or name, abbreviation, or counterfeit product thereof owned by NetPrisma or any third party in advertising, publicity, or other aspects.

Third-Party Rights

This document may refer to hardware, software and/or documentation owned by one or more third parties (“third-party materials”). Use of such third-party materials shall be governed by all restrictions and obligations applicable thereto.

We make no warranty or representation, either express or implied, regarding the third-party materials, including but not limited to any implied or statutory, warranties of merchantability or fitness for a particular purpose, quiet enjoyment, system integration, information accuracy, and non-infringement of any third-party intellectual property rights with regard to the licensed technology or use thereof. Nothing herein constitutes a representation or warranty by us to either develop, enhance, modify, distribute, market, sell, offer for sale, or otherwise maintain production of any our products or any other hardware, software, device, tool, information, or product. We moreover disclaim any and all warranties arising from the course of dealing or usage of trade.

Privacy Policy

To implement module functionality, certain device data are uploaded to NetPrisma’s or third-party’s servers, including carriers, chipset suppliers or customer-designated servers. NetPrisma, strictly abiding by the relevant laws and regulations, shall retain, use, disclose or otherwise process relevant data for the purpose of performing the service only or as permitted by applicable laws. Before data interaction with third parties, please be informed of their privacy and data security policy.

Disclaimer

a) We acknowledge no liability for any injury or damage arising from the reliance upon the information.
b) We shall bear no liability resulting from any inaccuracies or omissions, or from the use of the information contained herein.
c) While we have made every effort to ensure that the functions and features under development are free from errors, it is possible that they could contain errors, inaccuracies, and omissions. Unless otherwise provided by valid agreement, we make no warranties of any kind, either implied or express, and exclude all liability for any loss or damage suffered in connection with the use of features and functions under development, to the maximum extent permitted by law, regardless of whether such loss or damage may have been foreseeable.
d) We are not responsible for the accessibility, safety, accuracy, availability, legality, or completeness of information, advertising, commercial offers, products, services, and materials on third-party websites and third-party resources.

Copyright © NetPrisma US 2024. All rights reserved.

Revision History

Version	Date	Description
-	2024-04-07	Creation of the document
1.0.0	2024-04-07	Preliminary

Contents

Revision History 3
Contents 4
Table Index 6
Figure Index 7
1 Introduction 8
1.1. Introduction 8
1.2. Reference Standards 8
1.3. Special Mark 8
2 Product Overview 9
2.1. Frequency Bands and Functions 9
2.2. Key Features 10
2.3. Pin Assignment 12
2.4. Pin Definitions 13
3 Operating Characteristics 17
3.1. Operating Modes 17
3.2. Power Supply 17
3.2.1. Voltage Stability Requirements 18
3.2.2. Reference Design for Power Supply 19
3.3. Turn On, Turn Off and Reset Scenarios 19
3.3.1. Turn On 19
3.3.2. Turn Off 21
3.3.3. RESET# 22
4 Application Interfaces 24
4.1. (U)SIM Interface 24
4.1.1. (U)SIM Hot-Plug 24
4.1.2. Normally Closed (U)SIM Card Connector 26
4.1.3. Normally Open (U)SIM Card Connector 26
4.1.4. (U)SIM Design Notices 27
4.2. PCIe Interface 28
4.2.1. Endpoint Mode 28
4.2.2. PCIe $D3_{cold}$ State 29
4.3. Control and Indication Interfaces 30
4.3.1. W_DISABLE1# 31
4.3.2. W_DISABLE2#* 31
4.3.3. WWAN_LED# 32
4.3.4. WAKE_ON_WAN# 33
4.3.5. DPR 33
4.3.6. ANT_CONFIG 34
4.4. COEX UART* 34
4.5. Antenna Tuner Control Interfaces* 35
4.5.1. Antenna Tuner Control Interface through GPIOs 35
4.5.2. Antenna Tuner Control Interface through RFFE 35
4.6. Configuration Pins 35
5 RF Characteristics 37
5.1. Cellular Network 37
5.1.1. Antenna Interface & Frequency Bands 37
5.1.2. Rx Sensitivity 39
5.1.3. Tx Power 41
5.2. GNSS 41
5.2.1. Antenna Interface & Frequency Bands 41
5.2.2. GNSS Performance 42
5.3. Antenna Connectors 43
5.3.1. Antenna Connector Location 43
5.3.2. Antenna Connector Specifications 43
5.3.3. Antenna Connector Installation 44
5.3.4. Recommended RF Connector Installation 46
5.3.4.1. Assemble Coaxial Cable Plug Manually 46
5.3.4.2. Assemble Coaxial Cable Plug with Jig 47

5.3.5. Recommended Manufacturers of RF Connector and Cable 47
5.4. Antenna Requirements 47

6 Electrical Characteristics and Reliability 49
6.1. Absolute Maximum Ratings 49
6.2. Power Supply Requirements 50
6.3. Digital I/O Characteristics 50
6.4. Operating and Storage Temperatures 52
6.5. Power Consumption 52
6.6. ESD Protection 52
6.7. Thermal Dissipation 53

7 Mechanical Dimensions 55
7.1. Mechanical Dimensions 55
7.2. Top and Bottom Views 56
7.3. M.2 Connector 57
7.4. Packaging Specifications 57
7.4.1. Blister Tray 57
7.4.2. Packaging Process 58

8 Storage and Packaging 60
8.1. Storage Conditions 60
8.2. Notification 60
8.2.1. Coating 60
8.2.2. Cleaning 60
8.2.3. Installing 60

9 Appendix A References 62

Table Index

Table 1: Special Mark 8
Table 2: Frequency Bands and GNSS Functions of LCUR57-WWD 9
Table 3: Key Features of LCUR57-WWD 10
Table 4: Parameter Definition 13
Table 5: Pin Description 13
Table 6: Overview of Operating Modes 17
Table 7: Pin Description of VCC and GND Pins 17
Table 8: Pin Definition of FULL_CARD_POWER_OFF# 19
Table 9: Turn-on Timing of the Module 20
Table 10: Turn-off Timing of the Module through FULL_CARD_POWER_OFF# 22
Table 11: Pin Definition of RESET# 22
Table 12: Reset Timing of the Module 23
Table 13: Pin Definition of (U)SIM1 Interface 24
Table 14: Pin Definition of PCIe Interface 28
Table 15: Exit D3cold State Timing of the Module 30
Table 16: Pin Definition of Control and Indication Interfaces 30
Table 17: RF Function Status 31
Table 18: GNSS Function Status 31
Table 19: Network Status Indications of WWAN_LED# 32
Table 20: State of the WAKE_ON_WAN# 33
Table 21: Function of the DPR Signal 34
Table 22: Function of the ANT_CONFIG 34
Table 23: Pin Definition of COEX UART 34
Table 24: Pin Definition of Antenna Tuner Control Interface through GPIOs 35
Table 25: Pin Definition of Antenna Tuner Control Interface through RFFE 35
Table 26: Configuration Pins of the Module 36
Table 27: Configuration Pins List of M.2 Specification 36
Table 28: LCUR57-WWD Connector Definition of Antenna Interfaces 37
Table 29: Frequency Bands 37
Table 30: Dual-Antenna Conducted RF Receiver Sensitivity (Unit: dBm) 39
Table 31: Four-Antenna Conducted RF Receiver Sensitivity 41
Table 32: LCUR57-WWD Transmitting Power 41
Table 33: GNSS Frequency 42
Table 34: GNSS Performance 42
Table 35: Major Specifications of the RF Connector 44
Table 36: Antenna Requirements 47
Table 37: Absolute Maximum Ratings 49
Table 38: Power Supply Requirements 50
Table 39: Logic Levels of 1.8 V Digital I/O 51
Table 40: Logic Levels of 3.3 V Digital I/O 51
Table 41: (U)SIM High/Low-voltage I/O Requirements 51
Table 42: Operating and Storage Temperatures 52
Table 43: LCUR57-WWD Power Consumption 52
Table 44: Electrostatic Discharge Characteristics (Temperature: 25–30 °C, Humidity: 40 ±5 %) 53
Table 45: Related Documents 62
Table 46: Terms and Abbreviations 62

Figure Index

Figure 2: Pin Assignment 12
Figure 3: Power Supply Limits during Burst Transmission 18
Figure 4: Reference Circuit for VCC 18
Figure 5: Reference Circuit for Power Supply 19
Figure 6: Turn On the Module with a Host GPIO 20
Figure 7: Turn-on Timing of the Module 20
Figure 8: Reference Circuit for Laptop PCIe Reset Logic 1
Figure 9: Turn-off Timing through FULL_CARD_POWER_OFF# 21
Figure 10: Reference Circuit for RESET# with NMOS Driver Circuit 22
Figure 11: Timing of Resetting the Module 23
Figure 12: Reference Circuit for Normally Closed (U)SIM Card Connector 1
Figure 13: Reference Circuit of Normally Open (U)SIM Card Connector 26
Figure 14: PCIe Interface Reference Circuit (EP Mode) 29
Figure 15: PCIe $D3_{cold}$ State Timing 30
Figure 16: W_DISABLE1# and W_DISABLE2# Reference Circuit 32
Figure 17: WWAN_LED# Reference Circuit 32
Figure 18: WAKE_ON_WAN# Signal Reference Circuit 33
Figure 19: DPR Reference Circuit 34
Figure 20: Recommended Circuit of LCUR57-WWD Configuration Pins 36
Figure 21: Antenna Connectors on the LCUR57-WWD Module 43
Figure 22: Dimensions of the Receptacle (Unit: mm) 43
Figure 23: Dimensions of Mated Plugs (Ø 0.81 mm Coaxial Cables) (Unit: mm) 44
Figure 24: Space Factor of Mated Connectors (Ø 0.81 mm Coaxial Cables) (Unit: mm) 45
Figure 25: Space Factor of Mated Connectors (Ø 1.13 mm Coaxial Cables) (Unit: mm) 45
Figure 26: Plug in a Coaxial Cable Plug 46
Figure 27: Pull out a Coaxial Cable Plug 46
Figure 28: Install the Coaxial Cable Plug with Jig 47
Figure 29: Distribution of Heat Source Chips Inside the Module 51
Figure 30: Placement and Fixing of the Heatsink 52
Figure 31: Mechanical Dimensions 53
Figure 32: Top and Bottom Views of the Module 54
Figure 33: Blister Tray Dimension Drawing 55
Figure 34: Packaging Process 56
Figure 35: Installation Schematic 58

1 Introduction

1.1. Introduction

This document introduces LCUR57-WWD module and describes its air interfaces and hardware interfaces which are connected to your applications.

With this document, you can quickly understand module interface specifications, electrical and mechanical details, as well as other related information of the module. This document, coupled with application notes and user guides, makes it easy to design and set up mobile applications with the module.

1.2. Reference Standards

The module complies with the following standards:

- *PCI Express M.2 Specification Revision 4.0*
- *PCI Express Base Specification Revision 4.0*
- *ISO/IEC 7816-3*
- *MIPI Alliance Specification for RF Front-End Control Interface version 2.0*
- *3GPP TS 27.007* and *3GPP TS 27.005*

1.3. Special Mark

Table 1: Special Mark

Mark	Definition
*	Unless otherwise specified, an asterisk (*) after a function, feature, interface, pin name, command, argument, and so on indicates that it is under development and currently not supported; and the asterisk (*) after a model indicates that the model sample is currently unavailable.

2 Product Overview

2.1. Frequency Bands and Functions

LCUR57-WWD is an LTE-A/UMTS/HSPA+ wireless communication module with receive diversity. It provides data connectivity on LTE-FDD, LTE-TDD, DC-HSDPA, HSPA+, HSDPA, HSUPA and WCDMA networks with standard PCI Express M.2 interface.

It supports embedded operating systems such as Windows, Linux and Android, and provides GNSS [1] to meet your specific application demands.

The following table shows the frequency bands and GNSS functions of the module.

Table 2: Frequency Bands and GNSS Functions of LCUR57-WWD

Mode	Frequency Band
LTE-FDD (with Rx-diversity)	B1/B2/B3/B4/B5/B7/B8/B12/B13/B14/ B18/B19/B20/B25/B26/B28/B29 [2]/B30 /B32 [2]/B66
LTE-TDD (with Rx-diversity)	B38/B39/B40/B41/B42/B43/B46 [2]/B48
LTE DL 4 × 4 MIMO	B1/B2/B3/B4/B7/B25/B30/B32/B38/B39/B40/B41/B66
WCDMA (with Rx-diversity)	B1/B2/B3/B4/B5/B6/B8/B19
GNSS [1]	GPS; GLONASS; BDS; Galileo

NOTE

For details about CA combinations, see “NetPrisma_LCUR57-WWD_CA_Feature”.

[1] GNSS function is optional.
[2] LTE-FDD B29/B32 and LTE-TDD B46 support Rx only and are only for secondary component carrier.

2.2. Key Features

Table 3: Key Features of LCUR57-WWD

Feature	Details
Function Interface	PCI Express M.2 Interface
Power Supply	Supply voltage: 3.135–4.4 V Typical supply voltage: 3.7 V
Transmitting Power	● WCDMA: Class 3 (23 dBm ±2 dB) ● LTE-FDD - B30: Class 3 (22 dBm ±1 dB) - Other Bands: Class 3 (24 dBm ±1 dB) ● LTE-TDD - B41: Class 3 (23 dBm ±1 dB) - B41 HPUE: Class 2 (25.5 dBm +1/-1.5 dB) - B42/B43/B48: Class 3 (21 dBm ±1 dB) - Other Bands: Class 3 (24 dBm ±1 dB)
LTE Features	● Supports FDD and TDD ● Supports CA Categories: - Supports up to UL CA Cat 13 - Supports up to DL CA Cat 16 ● Supports 1.4/3/5/10/15/20 MHz RF bandwidths ● Supports 4 × 4 MIMO in DL direction ● Supports modulations: - Uplink: QPSK, 16QAM and 64QAM modulations - Downlink: QPSK, 16QAM and 64QAM and 256QAM modulations ● Maximum transmission data rates [3]: – LTE: 1000 Mbps (DL)/150 Mbps (UL)
UMTS Features	● Support 3GPP Rel-9 DC-HSDPA, HSPA+, HSDPA, HSUPA and WCDMA ● Support QPSK, 16QAM and 64QAM modulations ● Maximum transmission data rates [3]: – DC-HSDPA: 42 Mbps (DL) – HSUPA: 5.76 Mbps (UL) – WCDMA: 384 kbps (DL)/384 kbps (UL)
Internet Protocol Features	Supports QMI/MBIM/NITZ/PING/HTTP/HTTPS protocols
SMS	● Text and PDU modes ● Point-to-point MO and MT ● SMS cell broadcast ● SMS storage: ME by default
(U)SIM Interface	● Support (U)SIM card: 1.8/3.0 V ● Support Dual SIM Single Standby
eSIM	Support eSIM function

[3] The maximum rates are theoretical and the actual values depend on the network configuration.

PCIe Interface	● Complaint with PCIe Gen 2 ● PCIe × 1, supporting 5 Gbps per lane ● Used for AT command communication, data transmission, firmware upgrade, software debugging, GNSS NMEA sentence output
Antenna connectors	● Main, Rx-diversity/GNSS, MIMO1 and MIMO2 antenna connectors ● 50 Ω impedance
Rx-diversity	LTE/WCDMA
GNSS Features	● Support GPS, GLONASS, BDS and Galileo ● Protocol: NMEA 0183 ● Data update rate: 1 Hz
AT Commands	● Compliant with *3GPP TS 27.007* and *3GPP TS 27.005* ● NetPrisma enhanced AT commands
Physical Characteristics	● Size: 42.0 mm × 30.0 mm × 2.3 mm ● Weight: approx. 6.8 g
Temperature Ranges	● Operating temperature range: -25 to +75 °C [4] ● Extended temperature range: -40 to +85 °C [5] ● Storage temperature range: -40 to +90 °C
Firmware Upgrade	● PCIe interface ● DFOTA
RoHS	All hardware components are fully compliant with EU RoHS directive

2.3. Pin Assignment

[4] To meet the normal operating temperature range requirements, it is necessary to ensure effective thermal dissipation, e.g., by adding passive or active heatsinks, heat pipes, vapor chambers. Within the temperature range of -10 °C to +55 °C， the mentioned RF performance margins higher than 3GPP specifications can be guaranteed. When temperature goes beyond temperature range of -10 °C to 55 °C, a few RF performances of module may be slightly off 3GPP specifications.

[5] To meet the extended operating temperature range requirements, it is necessary to ensure effective thermal dissipation, e.g., by adding passive or active heatsinks, heat pipes, vapor chambers. Within this range, the module remains the ability to establish and maintain functions such as SMS, without any unrecoverable malfunction. Radio spectrum and radio network are not influenced, while one or more specifications, such as P_{out}, may undergo a reduction in value, exceeding the specified tolerances of 3GPP. When the temperature returns to the normal operating temperature level, the module will meet 3GPP specifications again.

The following figure shows the pin assignment of LCUR57-WWD. The top side contains LCUR57-WWD and antenna connectors.

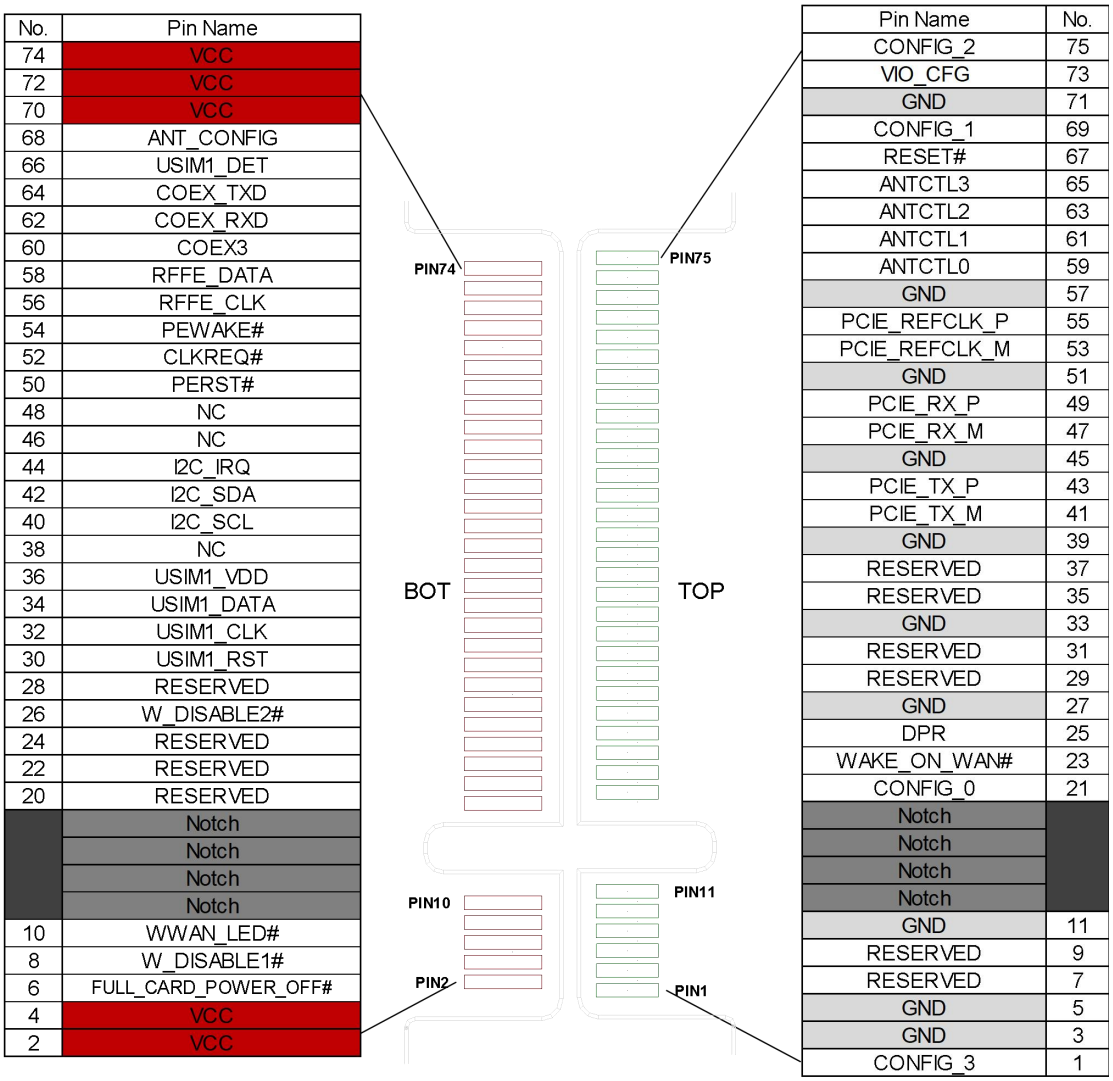

Figure 2: Pin Assignment

NOTE

Before the module turns on, ensure the pins DPR and USIM_DET are not pulled high to avoid current sink damaging the module. For more details, contact NetPrisma Technical Support.

2.4. Pin Definitions

The following tables show the pin definition and description of LCUR57-WWD.

Table 4: Parameter Definition

Parameter	Description
AI	Analog Input
AO	Analog Output
AIO	Analog Input/Output
DI	Digital Input
DO	Digital Output
DIO	Digital Input/Output
OD	Open Drain
PI	Power Input
PO	Power Output

DC characteristics include power domain and rated current.

Table 5: Pin Description

Pin No.	Pin Name	I/O	Description	DC Characteristics	Comment
1	CONFIG_3	DO	Not connected internally		
2	VCC	PI	Power supply for the module	Vmin = 3.135 V Vnom = 3.7 V Vmax = 4.4 V	
3	GND		Ground		
4	VCC	PI	Power supply for the module	Refer to PIN2	
5	GND		Ground		
6	FULL_CARD_POWER_OFF#	DI	Turn on/off the module	V_{IH}max = 4.4 V V_{IH}min = 1.19 V V_{IL}max = 0.2 V	Internally pulled down with a 100 kΩ resistor.
7	RESERVED		Reserved		
8	W_DISABLE1#	DI	Airplane mode control	1.8/3.3 V	Internally pulled up to 1.8 V with a 10 kΩ resistor. Active LOW.
9	RESERVED		Reserved		
10	WWAN_LED#	OD	RF status indication LED		Open drain and active low signal.
11	GND		Ground		
12	Notch		Notch		
13	Notch		Notch		

14	Notch		Notch		
15	Notch		Notch		
16	Notch		Notch		
17	Notch		Notch		
18	Notch		Notch		
19	Notch		Notch		
20	RESERVED		Reserve for PCM* clock		
21	CONFIG_0	DO	Connected to GND internally		
22	RESERVED		Reserve for PCM* data input		
23	WAKE_ON_WAN#	OD	Wake up the host.	1.8/3.3 V	Active low.
24	RESERVED		Reserve for PCM* data output		
25	DPR	DI	Dynamic power reduction	1.8 V	Internally pulled up to 1.8 V.
26	W_DISABLE2#*	DI	GNSS enable control	1.8/3.3 V	Internally pulled up to 1.8 V with a 10 kΩ resistor. Active LOW.
27	GND		Ground		
28	RESERVED		Reserve for PCM* data frame sync		
29	RESERVED		Reserved		
30	USIM1_RST	DO	(U)SIM1 card reset	1.8/3.0 V	
31	RESERVED		Reserved		
32	USIM1_CLK	DO	(U)SIM1 card clock	1.8/3.0 V	
33	GND		Ground		
34	USIM1_DATA	DIO	(U)SIM1 card data	1.8/3.0 V	Internally pulled up.
35	RESERVED		Reserved		
36	USIM1_VDD	PO	Power supply for (U)SIM1 card	**High-Voltage:** Vmin = 3.05 V Vnom = 2.85 V Vmax = 2.7 V **Low-Voltage:** Vmin = 1.95 V Vnom = 1.8 V Vmax = 1.65 V	
37	RESERVED		Reserved		

38	NC		Not connected		
39	GND		Ground		
40	I2C_SCL	OD	I2C serial clock	1.8 V	Internally pulled up to 1.8 V.
41	PCIE_TX_M	AO	PCIe transmit (-)		Requires differential impedance of 95 Ω.
42	I2C_SDA	OD	I2C serial data	1.8 V	Internally pulled up to 1.8 V.
43	PCIE_TX_P	AO	PCIe transmit (+)		Requires differential impedance of 95 Ω.
44	I2C_IRQ	DI	I2C interrupt signal	1.8 V	
45	GND		Ground		
46	NC		Not connected		
47	PCIE_RX_M	AI	PCIe receive (-)		Requires differential impedance of 95 Ω.
48	NC		Not connected		
49	PCIE_RX_P	AI	PCIe receive (+)		Requires differential impedance of 95 Ω.
50	PERST#	DI	PCIe reset	1.8/3.3 V	Active low.
51	GND		Ground		
52	CLKREQ#	OD	PCIe clock request		Active low.
53	PCIE_REFCLK_M	AIO	PCIe reference clock (-)		Requires differential impedance of 95 Ω.
54	PEWAKE#	OD	PCIe wake up	1.8/3.3 V	Active low.
55	PCIE_REFCLK_P	AIO	PCIe reference clock (+)		Requires differential impedance of 95 Ω.
56	RFFE_CLK*	DO	Used for external MIPI IC control		If unused, keep it open.
57	GND		Ground		
58	RFFE_DATA*	DIO	Used for external MIPI IC control		If unused, keep it open.
59	ANTCTL0*	DO	Antenna tuner control	1.8 V	
60	COEX3*	DIO	COEX GPIO	1.8 V	
61	ANTCTL1*	DO	Antenna tuner control	1.8 V	
62	COEX_RXD*	DI	LTE&WLAN coexistence receive	1.8 V	
63	ANTCTL2*	DO	Antenna tuner control	1.8 V	
64	COEX_TXD*	DO	LTE&WLAN coexistence transmit	1.8 V	

65	ANTCTL3*	DO	Antenna tuner control	1.8 V	
66	USIM1_DET	DI	(U)SIM1 card hot-plug detect	1.8 V	
67	RESET#	DI	Reset the module	1.8 V	Active low. A test point is recommended to be reserved if unused.
68	ANT_CONFIG	DI	Antenna configuration	1.8 V	
69	CONFIG_1	DO	Connected to GND internally		
70	VCC	PI	Power supply for the module	Refer to PIN2	
71	GND		Ground		
72	VCC	PI	Power supply for the module	Refer to PIN2	
73	VIO_CFG		Configuration of PCIe sideband signals [6] power domain NC: support 1.8/3.3 V; GND: support 3.3 V		The default state is NC (Not connected).
74	VCC	PI	Power supply for the module	Refer to PIN2	
75	CONFIG_2	DO	Not connected internally		

NOTE

Keep all RESERVED and unused pins unconnected. All GND pins should be connected to ground.

[6] PCIe sideband signals include PERST#, CLKREQ# and PEWAKE#.

3 Operating Characteristics

3.1. Operating Modes

The table below briefly summarizes the various operating modes of the module.

Table 6: Overview of Operating Modes

Mode	Details	
Full Functionality Mode	Idle	Software is active. The module has registered on the network, and it is ready to send and receive data.
	Data	Network is connected. In this mode, the power consumption is determined by network setting and data transmission rate.
Minimum Functionality Mode	**AT+CFUN=0** sets the module to a minimum functionality mode without removing the power supply. In this mode, both RF function and (U)SIM card are invalid.	
Airplane Mode	**AT+CFUN=4** or driving W_DISABLE1# pin LOW will set the module to airplane mode. In this mode, the RF function is invalid.	
Low Power Mode	In this mode, the module enters D3 cold state.	
Power Down Mode	In this mode, the power management unit shuts down the power supply. Software is inactive, all application interfaces are inaccessible, and the operating voltage (connected to VCC) remains applied.	

NOTE

For more details about the AT command, please contact us for the other documents.

3.2. Power Supply

Table 7: Pin Description of VCC and GND Pins

Pin	Pin Name	I/O	Description	DC Characteristics
2, 4, 70, 72, 74	VCC	PI	Power supply for the module	Vmin = 3.135 V Vnom = 3.7 V Vmax = 4.4 V
3, 5, 11, 27, 33, 39, 45, 51, 57, 71	GND		Ground	

3.2.1. Voltage Stability Requirements

The power supply range of the module is from 3.135 V to 4.4 V. Ensure that the input voltage never drops below 3.135 V, otherwise the module will be powered down automatically. The following figure shows the maximum voltage drop during radio frequency transmission in 3G and 4G networks.

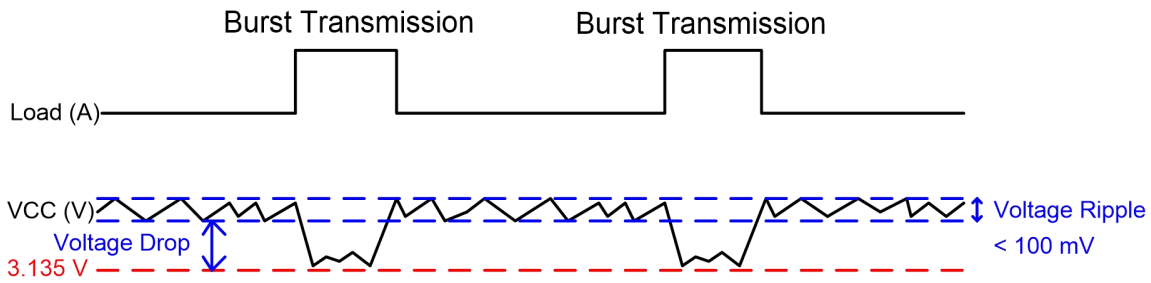

Figure 3: Power Supply Limits during Burst Transmission

To decrease the voltage drop, a bypass capacitor of about 220 µF with low ESR should be used, and a multi-layer ceramic chip capacitor (MLCC) array should also be reserved due to its ultra-low ESR. It is recommended to use four ceramic capacitors (1 µF, 100 nF, 33 pF, 10 pF) for composing the MLCC array, and place these capacitors close to VCC pins. The main power supply from an external application must be a single voltage source. The width of VCC trace should be not less than 2 mm. In principle, the longer the VCC trace is, the wider it should be.

In addition, to ensure the stability of the power supply, it is recommended to use a TVS with working peak reverse voltage of 5 V.

The following figure shows a reference circuit of VCC.

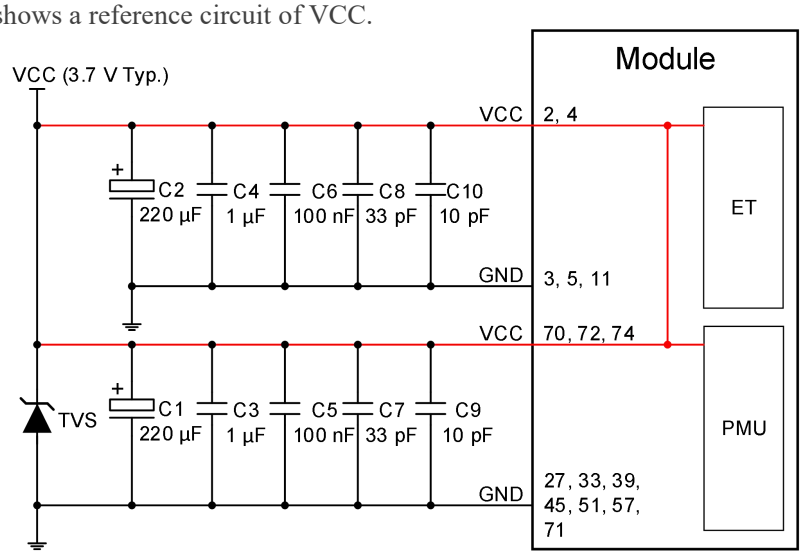

Figure 4: Reference Circuit for VCC

3.2.2. Reference Design for Power Supply

The power source is critical to the module's performance. The power supply of the module should be able to provide a sufficient current of 2 A at least and the peak current should be 3 A at least.

The following figure shows a reference design for +5.0 V input power source. The typical output of the power supply is about 3.7 V.

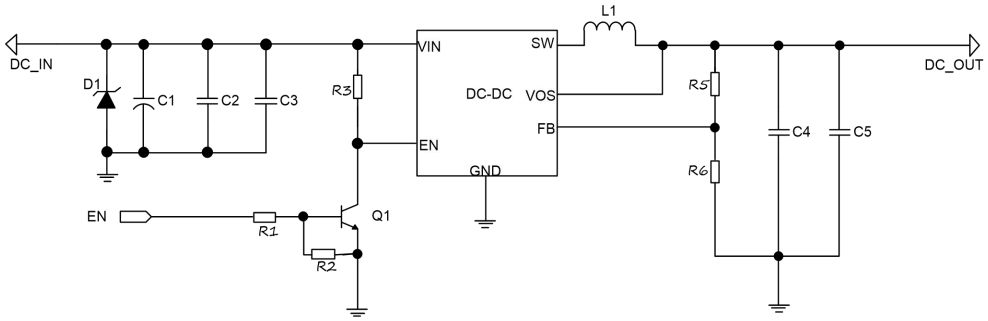

Figure 5: Reference Circuit for Power Supply

NOTE

To avoid corrupting the data in the internal flash, do not switch off the power supply when the module works normally. Only after shutting down the module with FULL_CARD_POWER_OFF# or AT command, can you cut off the power supply.

3.3. Turn On, Turn Off and Reset Scenarios

3.3.1. Turn On

Pulling up the FULL_CARD_POWER_OFF# pin will turn on the module. And it has been internally pulled down with a 100 kΩ resistor.

Table 8: Pin Definition of FULL_CARD_POWER_OFF#

Pin Name	Pin No.	Description	Comment
FULL_CARD_POWER_OFF#	6	Turn on/off the module	Internally pulled down with a 100 kΩ resistor.

It is recommended to use a host GPIO to turn on the module by pulling up FULL_CARD_POWER_OFF#. A simple reference circuit is illustrated in the following figure.

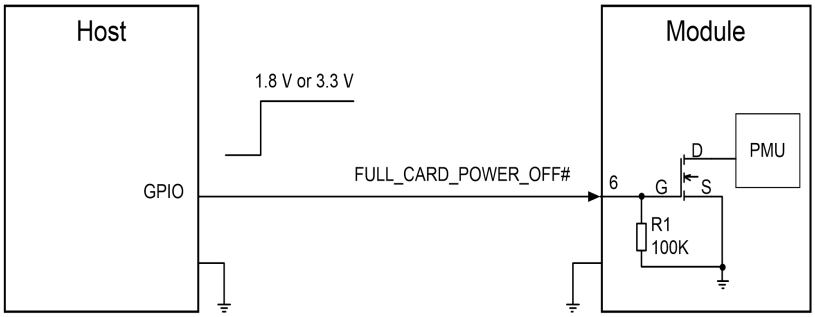

NOTE: The voltage of pin 6 should be not less than 1.19 V when it is at high level.

Figure 6: Turn On the Module with a Host GPIO

The turn-on timing is illustrated in the following figure.

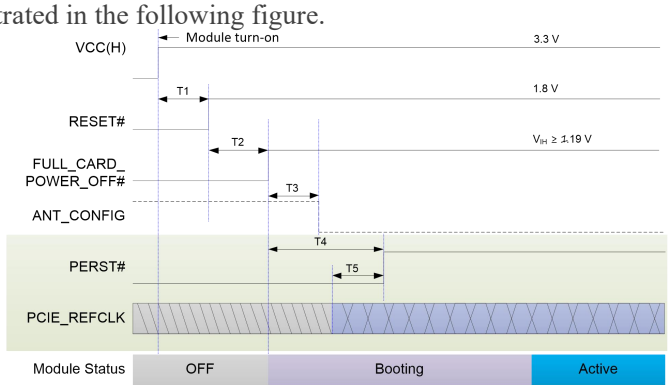

Figure 7: Turn-on Timing of the Module

Table 9: Turn-on Timing of the Module

Index	Min.	Typ.	Max.	Comment
T1	0 ms	50 ms	-	RESET# will be pulled high internally and automatically when the host doesn't pull high RESET#. If the host pulls low RESET#, module will be under reset state.
T2	0 ms	-	-	The module is waiting for turning on.
T3	0 ms	-	-	● ANT_CONFIG is used for the antenna configuration High/Floating: 2 antennas (high by default); Low: 4 antennas. ● Assert ANT_CONFIG before de-asserting PERST#. ● If ANT_CONFIG is not used, T3 could be ignored.
T4	100 ms	-	-	De-assert PERST# 100 ms after de-asserting FULL_CARD_POWER_OFF#.
T5	100 µs	-	-	The period during which PCIE_REFCLK_P/M is stable before PERST# is driven high.

NOTE

- **Module:**
  1) If FULL_CARD_POWER_OFF# is driven high at the same time with VCC, the module will be able to turn on normally.
  2) PERST# needs to be driven high over 100 ms after FULL_CARD_POWER_OFF# is driven high. Then, PCIe interface will be enabled.
- **Host:**
  1) When the FULL_CARD_POWER_OFF# signal is low, please avoid any leakage current entering the module's DPR pin from the host.
  2) The host should control FULL_CARD_POWER_OFF# and PERST# based on the timing sequence.
  3) If the host fails to control FULL_CARD_POWER_OFF# and PERST# based on the timing sequence, instability in PCIe interface will be caused.

For the laptop platform, if there are two reset signals to control PERST# pin of the module, and the following figure is for reference. It is recommended that AUX Reset be pulled up before Global PCIe Reset is driven high.

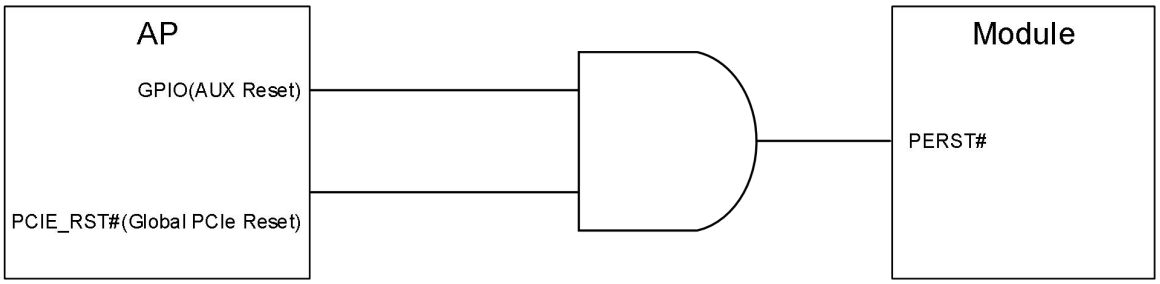

Figure 8: Reference Circuit for Laptop PCIe Reset Logic

3.3.2. Turn Off

Pulling down the FULL_CARD_POWER_OFF# pin will turn off the module. The turn-off timing is illustrated in the following figure.

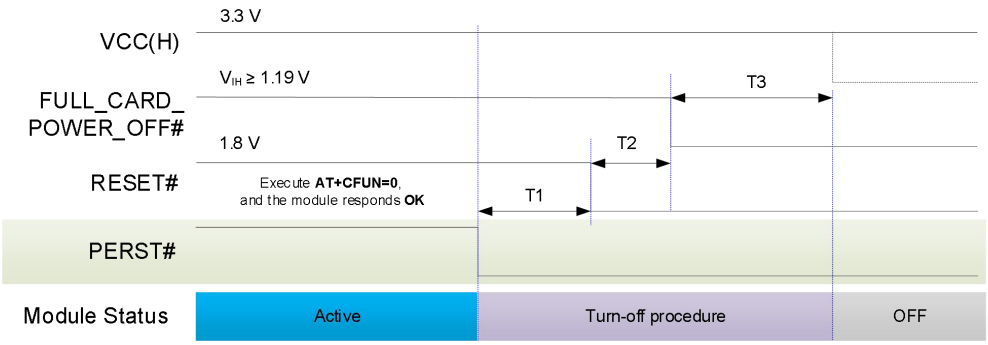

Figure 9: Turn-off Timing through FULL_CARD_POWER_OFF#

Table 10: Turn-off Timing of the Module through FULL_CARD_POWER_OFF#

Index	Min.	Typ.	Max.	Comment
T1	15 ms	-	-	PCIe interface is disabled by asserting PERST#.
T2	0 ms	100 ms	-	The period from the host pulling down RESET# to it pulling down FULL_CARD_POWER_OFF#.
T3	900 ms	-	-	The period from the host pulling down FULL_CARD_POWER_OFF# to the module turning off. It is recommended to cut off the VCC when the module has been turned off completely.

3.3.3. RESET#

RESET# is an active low signal (1.8 V logic level). When this pin is driven low, the module will immediately enter reset condition.

Please note that triggering the RESET# signal will lead to loss of all data in the module and removal of system drivers. It will also disconnect the modem from the network.

Table 11: Pin Definition of RESET#

Pin Name	Pin No.	Description	Comment
RESET#	67	Reset the module	Active low. A test point is recommended to be reserved if unused.

An open collector/drain driver or button can be used to control the RESET# pin.

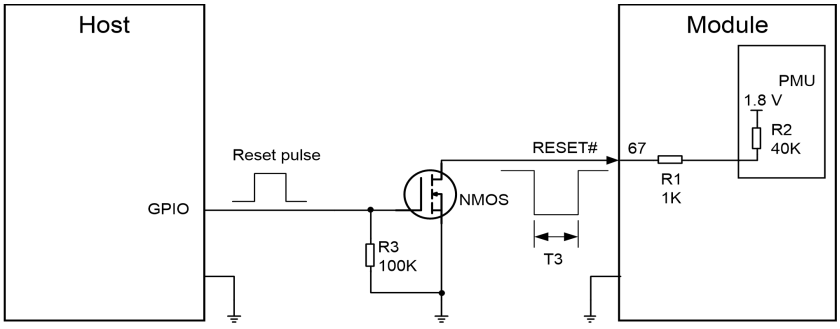

Figure 10: Reference Circuit for RESET# with NMOS Driver Circuit

The reset scenario is illustrated in the following figure.

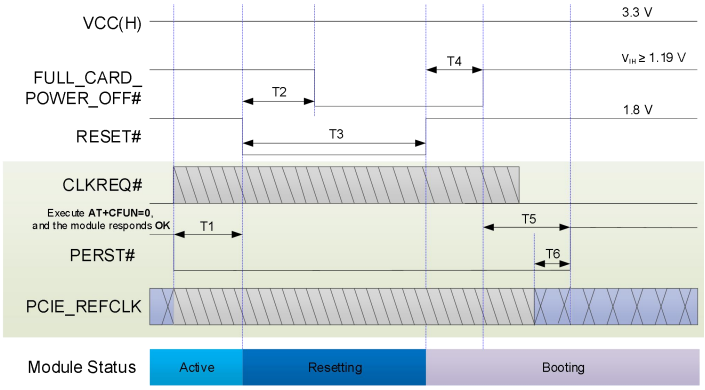

Figure 11: Timing of Resetting the Module

Table 12: Reset Timing of the Module

Index	Min.	Typ.	Max.	Comment
T1	15 ms	-	-	The period from the host PERST# asserting to the its RESET# asserting.
T2	0 ms	100 ms	-	The period from the host RESET# asserting to its FULL_CARD_POWER_OFF# asserting.
T3	250 ms	-	-	RESET# should be pulled down for at least 250 ms. An asserting time less than 250 ms is unreliable.
T4	0 ms	-	-	The period from the host RESET# releasing to its FULL_CARD_POWER_OFF# releasing.
T5	100 ms	-	-	De-assert PERST# 100 ms after de-asserting FULL_CARD_POWER_OFF#.
T6	100 µs	-	-	The period during which PCIE_REFCLK_P/M is stable before PERST# is driven high.

NOTE

- **Module:**
  1) When RESET# is kept at low level for 250 ms or more, the module will reset stably.
  2) If PERST# is not pulled down before RESET#, instability in PCIe will be caused. If PERST# is not pulled high after reset, a system pause will be caused.
- **Host:**
  1) VCC of the system should supply power continuously and FULL_CARD_POWER_OFF# should be kept at high level.
  2) The host should control RESET# and PERST# based on the timing sequence.
  3) If the host fails to control RESET# and PERST# based on the timing sequence, instability in PCIe will be caused.
  4) When the FULL_CARD_POWER_OFF# signal is low, please avoid any leakage current entering the module's DPR pin from the host.

4 Application Interfaces

The physical connections and signal levels of LCUR57-WWD comply with PCI Express M.2 specifications. This chapter mainly describes the definition and application of the following interfaces/signals/pins of LCUR57-WWD:

- (U)SIM interface
- PCIe interface
- Control and indicator signals
- COEX UART*
- Antenna tuner control interfaces*
- Configuration pins

4.1. (U)SIM Interface

The (U)SIM interface circuitry meets *ISO/IEC 7816-3,* ETSI and IMT-2000 requirements. Both 1.8 V and 3.0 V (U)SIM cards are supported, and Dual SIM Single Standby function is supported. (U)SIM2 only supports eSIM embedded in the module.

Table 13: Pin Definition of (U)SIM1 Interface

Pin Name	Pin No.	I/O	Description	Comment
USIM1_VDD	36	PO	Power supply for (U)SIM1 card	
USIM1_DATA	34	DIO	(U)SIM1 card data	Internally pulled up.
USIM1_CLK	32	DO	(U)SIM1 card clock	
USIM1_RST	30	DO	(U)SIM1 card reset	
USIM1_DET	66	DI	(U)SIM1 card hot-plug detect	

4.1.1. (U)SIM Hot-Plug

The module supports (U)SIM card hot-plug via the (U)SIM card hot-plug detect pin (USIM1_DET), which is enabled by default. (U)SIM card is detected by USIM1_DET interruption. (U)SIM card insertion is detected by high/low level.

The following command enables or disables (U)SIM card hot-plug function. The level of (U)SIM card detection pin should also be set when the (U)SIM card is inserted.

AT+QSIMDET (U)SIM Card Detection	
Test Command **AT+QSIMDET=?**	Response **+QSIMDET: (**list of supported **<enable>**s**),(**list of supported **<insert_level>**s**)** **OK**
Read Command **AT+QSIMDET?**	Response **+QSIMDET: <enable>,<insert_level>** **OK**

Write Command **AT+QSIMDET=<enable>,<insert_level>**	Response **OK** If there is any error: **ERROR**
Maximum Response Time	300 ms
Characteristics	The command takes effect after the module is restarted. The configuration will be saved automatically.

Parameter

<enable>	Integer type. Enable or disable (U)SIM card detection. 0 Disable 1 Enable
<insert_level>	Integer type. The level of (U)SIM detection pin when a (U)SIM card is inserted. 0 Low level 1 High level

NOTE

1. Hot-plug function is invalid if the configured value of **<insert_level>** is inconsistent with hardware design.
2. The underlined value is the default.
3. USIM1_DET is pulled high by default, and will be internally pulled up to 1.8 V by software configuration only when (U)SIM hot-plug is enabled by **AT+QSIMDET**.

4.1.2. Normally Closed (U)SIM Card Connector

With a normally closed (U)SIM card connector, USIM1_DET pin is shorted to ground when there is no (U)SIM card inserted. (U)SIM card detection by high level is applicable to this type of connector. Once (U)SIM hot-plug is enabled by executing **AT+QSIMDET=1,1**, a (U)SIM card insertion will drive USIM1_DET from low to high level, and the removal of it will drive USIM1_DET from high to low level.

- When the (U)SIM is absent, CD is shorted to ground and USIM1_DET is at low level.
- When the (U)SIM is present, CD is open from ground and USIM1_DET is at high level.

The following figure shows a reference design for (U)SIM interface with a normally closed (U)SIM card connector.

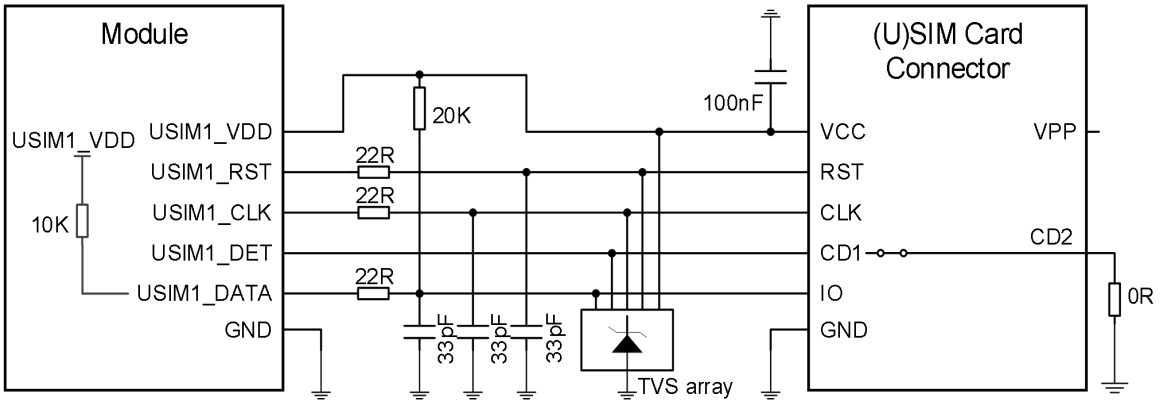

NOTE: All these resistors, capacitors and TVS array should be close to (U)SIM card connector in PCB layout.
The external pull-up resistor of USIM1_DATA is optional.

Figure 12: Reference Circuit for Normally Closed (U)SIM Card Connector

4.1.3. Normally Open (U)SIM Card Connector

With a normally open (U)SIM card connector, CD1 and CD2 of the connector are disconnected when there is no (U)SIM card inserted. (U)SIM card detection by low level is applicable to this type of connector. Once (U)SIM hot-plug is enabled by executing **AT+QSIMDET=1,0**, a (U)SIM card insertion will drive USIM1_DET from high to low level, and the removal of it will drive USIM1_DET from low to high level.

- When the (U)SIM is absent, CD1 is open from CD2 and USIM1_DET is at high level.
- When the (U)SIM is present, CD1 is pull down to ground and USIM1_DET is at low level.

The following figure shows a reference design for (U)SIM interface with a normally open (U)SIM card connector.

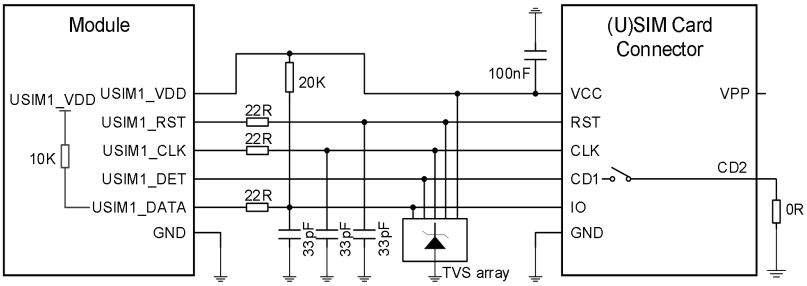

NOTE: All these resistors, capacitors and TVS array should be close to (U)SIM card connector in PCB layout.
The external pull-up resistor of USIM1_DATA is optional.

Figure 13: Reference Circuit of Normally Open (U)SIM Card Connector

NOTE

1. If the (U)SIM card detection function is not needed, please keep USIM1_DET unconnected.
2. If the (U)SIM card detection function is required, note that a pull-up resistor should not be added to the USIM1_DET signals.

4.1.4. (U)SIM Design Notices

To enhance the reliability and availability of the (U)SIM card in applications, please follow the criteria below when designing the (U)SIM circuit:

- Place the (U)SIM card connector as close to the module as possible. Keep the trace length less than 200 mm.
- Keep (U)SIM card signals away from RF and VCC traces.
- Make sure the ground between the module and the (U)SIM card connector is short and wide. Keep the trace width of ground and USIM1_VDD not less than 0.2 mm to maintain the same electric potential. Keep the trace width of USIM1_DATA, USIM1_CLK, USIM1_RST and USIM1_DET not less than 0.1 mm.
- To avoid cross-talk between USIM1_DATA and USIM1_CLK, keep them away from each other and shield them with surrounded ground.
- To offer better ESD protection, add a TVS diode array with parasitic capacitance not exceeding 20 pF. Add 22 Ω resistors in series between the module and the (U)SIM card connector to suppress EMI and enhance ESD protection. The 33 pF capacitors are used to filter out RF interference. Note that the (U)SIM peripheral circuit should be close to the (U)SIM card connector.
- The pull-up resistor on USIM1_DATA trace can improve anti-jamming capability in case of long layout trace and sensitive occasion, and it should be placed close to the (U)SIM card connector.

4.2. PCIe Interface

The module provides one integrated PCIe interface, featuring as follows:

- *PCI Express Base Specification Revision 4.0, Version 1.1*
- Data rate up to 5 Gbps per lane

Table 14: Pin Definition of PCIe Interface

Pin No.	Pin Name	I/O	Description	Comment
55	PCIE_REFCLK_P	AIO	PCIe reference clock (+)	Requires differential impedance of 95 Ω.
53	PCIE_REFCLK_M	AIO	PCIe reference clock (-)	
49	PCIE_RX_P	AI	PCIe receive data (+)	Requires differential impedance of 95 Ω.
47	PCIE_RX_M	AI	PCIe receive data (-)	
43	PCIE_TX_P	AO	PCIe transmit data (+)	Requires differential impedance of 95 Ω.
41	PCIE_TX_M	AO	PCIe transmit data (-)	
50	PERST#	DI	PCIe reset input	Active low.
52	CLKREQ#	OD	PCIe clock request	Active low.
54	PEWAKE#	OD	PCIe wake up the host	Active low.

4.2.1. Endpoint Mode

LCUR57-WWD supports endpoint (EP) mode. In this mode, the module is configured as a PCIe EP device. The following figure shows a reference circuit of PCIe endpoint mode.

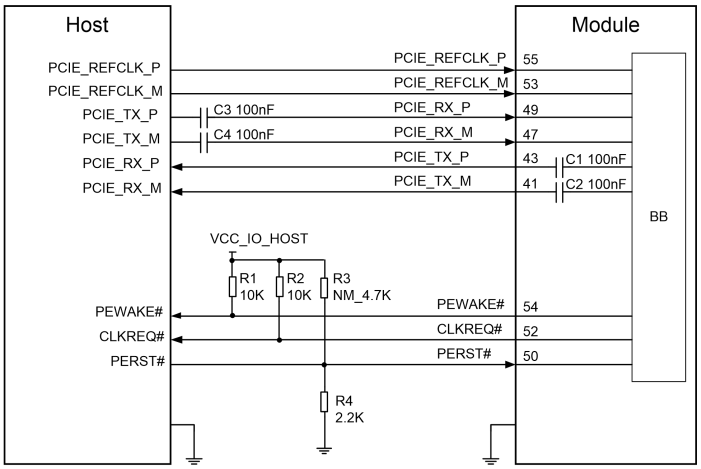

NOTE:
The voltage level VCC_IO_HOST depends on the host side due to open drain in pin 50, 52 and 54.
HOST must use a push-pull GPIO to control PERST#.

Figure 14: PCIe Interface Reference Circuit (EP Mode)

To ensure the signal integrity of PCIe interface, AC coupling capacitors C3 and C4 should be placed close to the host on PCB. C1 and C2 have been integrated inside the module, so do not place these two capacitors on your schematic and PCB.

Comply with the following principles in PCIe interface design to meet *PCI Express Base Specification Revision 4.0*.

- Keep the PCIe data and control signals away from sensitive circuits and signals, such as RF, audio, crystal and oscillator signals.
- Add a capacitor in series on Tx/Rx traces to prevent any DC bias.
- Keep the maximum trace length less than 300 mm.
- Keep the length matching of each differential data pair (Tx/Rx) less than 0.7 mm for PCIe routing traces.
- Keep the differential impedance of PCIe data trace as 95 Ω ±10 %.
- You must not route PCIe data traces under components or cross them with other traces.
- It is recommended to use a push-pull GPIO to output a low level that approaches 0 V rather than using a pull-down resistor to get a low level. Otherwise, voltage division may be formed with the pull-up resistor inside the module, resulting in an uncertain 0 V voltage that could further lead to unpredictable problems. If host uses a push-pull GPIO to control PERST#, R3 can be not mounted.

4.2.2. PCIe $D3_{cold}$ State

For the laptop platform, module must go through $D3_{hot}$ before entering $D3_{cold}$. In $D3_{hot}$ state, PERST# must be kept in high level.

The module enters $D3_{cold}$ state after PERST# is driven low. The module enters D0 state after PERST# is driven high.

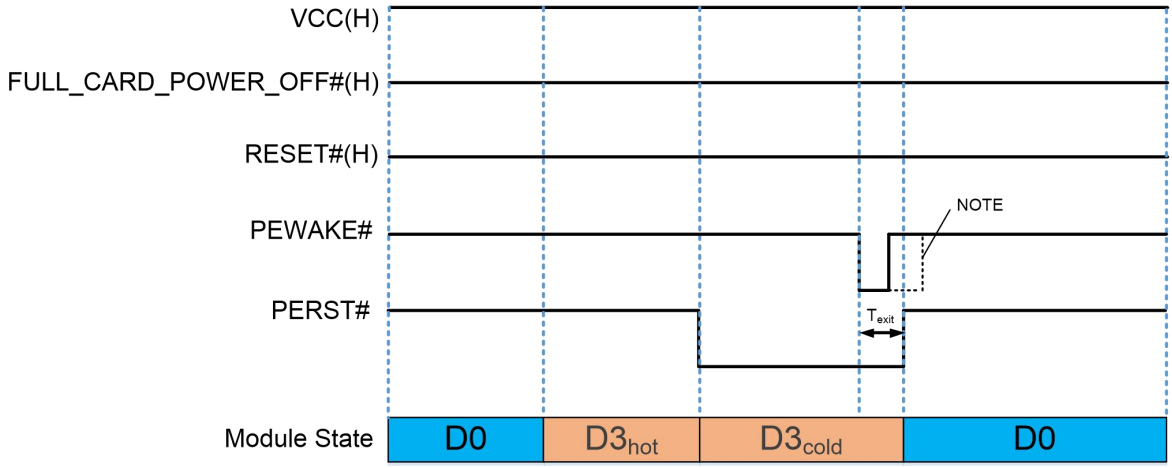

NOTE: PEWAKE# may be pulled up before or after PERST# is pulled up, depending on when HOST pulls up PERST#. This time does not affect the normal operation of the module and can be ignored.

Figure 15: PCIe D3cold State Timing

Table 15: Exit D3cold State Timing of the Module

Symbol	Min.	Typ.	Max.	Comment
T_{exit}	50 ms	150 ms	500 ms	The period from the module pulling down PEWAKE# to HOST pulling up PERST#.

4.3. Control and Indication Interfaces

Table 16: Pin Definition of Control and Indication Interfaces

Pin Name	Pin No.	I/O	Description	Comment
WWAN_LED#	10	OD	RF status indication LED	Active low.
WAKE_ON_WAN#	23	OD	Wake up the host	Active low.
W_DISABLE1#	8	DI	Airplane mode control	Active low.
W_DISABLE2#*	26	DI	GNSS enable control	Active low.
DPR	25	DI, PU	Dynamic power reduction	Active low.
ANT_CONFIG	68	DI	Antenna configuration	

4.3.1. W_DISABLE1#

The module provides a W_DISABLE1# pin to disable or enable airplane mode through hardware operation. The W_DISABLE1# pin is pulled up by default. Driving it low will set the module to airplane mode. In airplane mode, the RF function will be disabled.

The RF function can also be enabled or disabled through AT commands.

Table 17: RF Function Status

Logic Level	AT Command	RF Function	Operating Mode
High Level	**AT+CFUN=1**	Enable	Full functionality mode
	AT+CFUN=0	Disable	Minimum functionality mode
	AT+CFUN=4	Disable	Airplane mode
Low Level	**AT+CFUN=0** **AT+CFUN=1** **AT+CFUN=4**	Disable	Airplane mode

4.3.2. W_DISABLE2#*

The module provides a W_DISABLE2# pin used to disable or enable the GNSS function. The W_DISABLE2# pin is pulled up by default. Driving it low will disable the GNSS function. The combination of W_DISABLE2# pin and AT commands can control the GNSS function.

Table 18: GNSS Function Status

W_DISABLE2# Level	AT Command	GNSS Function Status
High Level	**AT+QGPS=1**	Enable
	AT+QGPSEND	Disable
Low Level	**AT+QGPS=1**	
	AT+QGPSEND	

A simple voltage-level translator based on diodes is used on W_DISABLE1# pin and W_DISABLE2# pin which are pulled up to a 1.8 V voltage in the module, as shown in the following figure. So, the control signals (GPIO) of the host device could be a 1.8 V or 3.3 V voltage level and pull-up resistor is not needed on the host side. These two signals are active low, and a reference circuit is shown below.

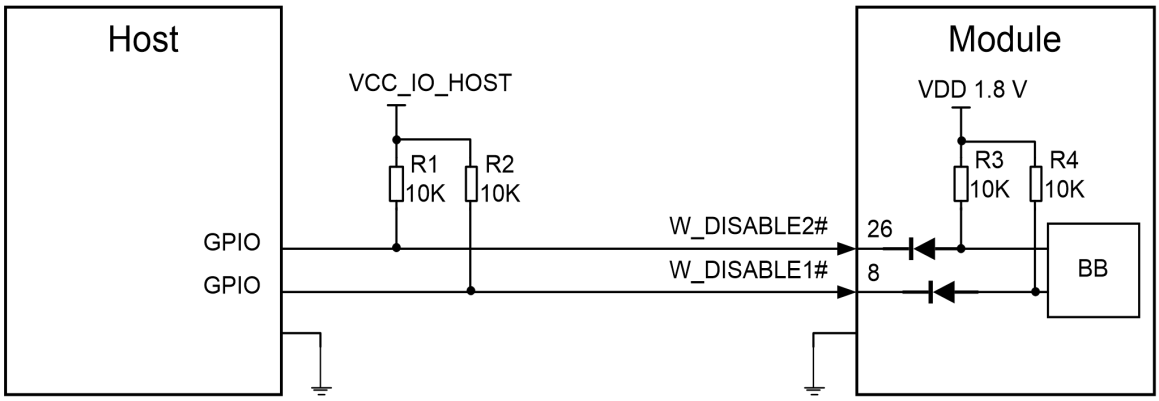

NOTE:
Host's GPIO could be a 1.8 V or 3.3 V voltage level.

Figure 16: W_DISABLE1# and W_DISABLE2# Reference Circuit

4.3.3. WWAN_LED#

The WWAN_LED# signal is used to indicate RF status of the module, and its typical power consumption is up to 10 mA.

To reduce the power consumption of the LED, a resistor must be placed in series with the LED, as illustrated in the figure below. The LED is on when the WWAN_LED# signal is at a low voltage level.

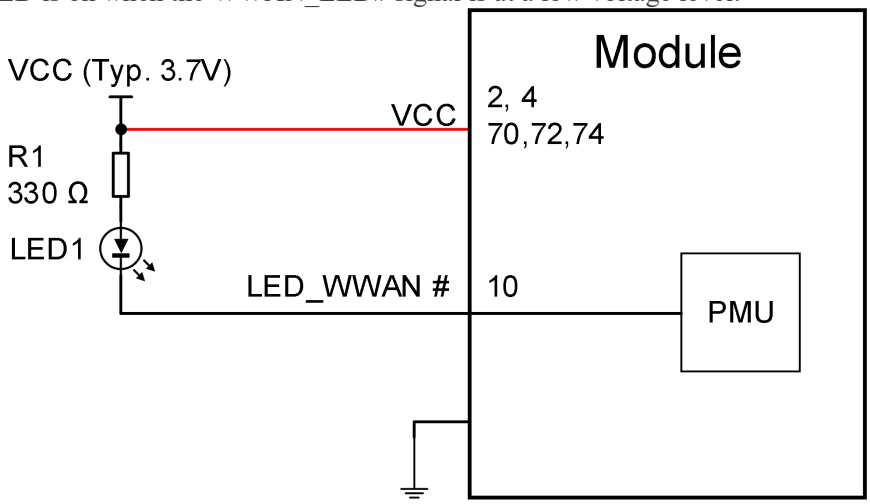

Figure 17: WWAN_LED# Reference Circuit

Table 19: Network Status Indications of WWAN_LED#

WWAN_LED# Level	LED	RF Status
Low Level	On	On
High Level	Off	Off

NOTE

RF function is turned off if any of the following circumstances occurs:

- The (U)SIM card is not working.
- W_DISABLE1# is at low level (airplane mode enabled).

4.3.4. WAKE_ON_WAN#

The WAKE_ON_WAN# is an open drain pin, which requires a pull-up resistor on the host. When a URC returns, a one-second low level pulse signal will be outputted to wake up the host. The module operation status indicated by WAKE_ON_WAN# is shown as below.

Table 20: State of the WAKE_ON_WAN#

WAKE_ON_WAN# State	Module Operation Status
Outputs a one-second pulse signal at low level	SMS
Always at high level	Idle/sleep

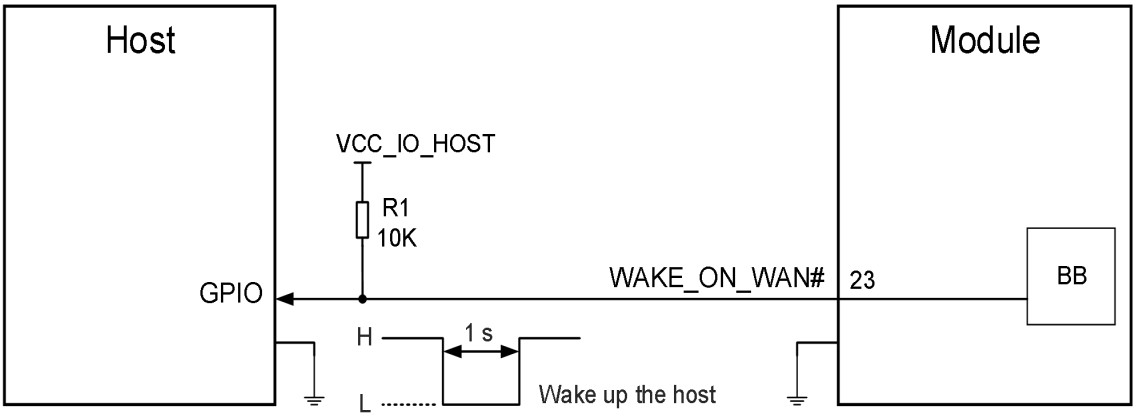

NOTE: The voltage level on VCC_IO_HOST depends on the host side due to open drain in pin 23.

Figure 18: WAKE_ON_WAN# Signal Reference Circuit

4.3.5. DPR

LCUR57-WWD provides a DPR (Dynamic Power Reduction) signal for body SAR (Specific Absorption Rate) detection. The signal is sent by a host system proximity sensor to the module to provide an input trigger which will reduce the output power in the radio transmission.

Table 21: Function of the DPR Signal

DPR Level	Function
High/Floating	Max. transmitting power will not back off
Low	Max. transmitting power will back off

A reference circuit is shown as below.

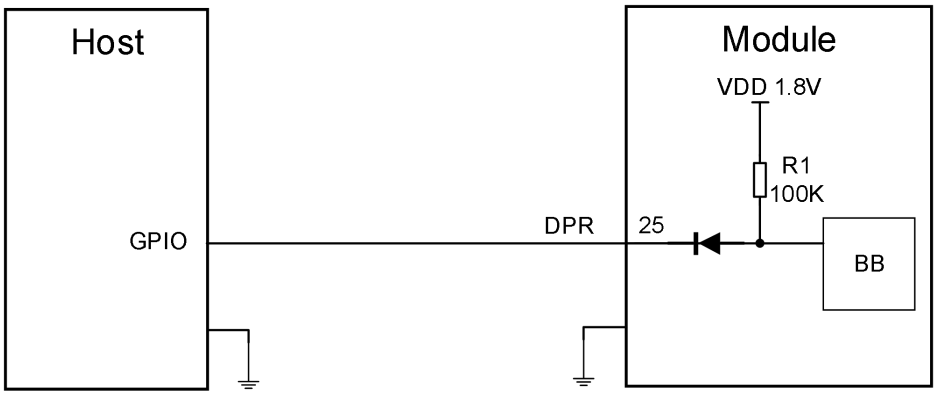

Figure 19: DPR Reference Circuit

4.3.6. ANT_CONFIG

LCUR57-WWD provides an ANT_CONFIG pin for antenna configuration. The signal of the pin is sent from host system to the module. ANT_CONFIG is an input port which is pulled high internally by default. The definition of ANT_CONFIG is shown in the table below.

Table 22: Function of the ANT_CONFIG

ANT_CONFIG Level	Function
High/Floating	Support 2 antennas
Low	Support 4 antennas

4.4. COEX UART*

The module provides one COEX UART.

Table 23: Pin Definition of COEX UART

Pin Name	Pin No.	I/O	Description
COEX3	60	DIO	COEX GPIO
COEX_RXD	62	DI	LTE&WLAN coexistence receive

COEX_TXD	64	DO	LTE&WLAN coexistence transmit

NOTE

Please note that COEX_RXD and COEX_TXD cannot be used as general UART.

4.5. Antenna Tuner Control Interfaces*

ANTCTL[0:3] and RFFE signals are used for antenna tuner control and should be routed to an appropriate antenna control circuit. More details about the interface will be added in a future version of the document.

4.5.1. Antenna Tuner Control Interface through GPIOs

Table 24: Pin Definition of Antenna Tuner Control Interface through GPIOs

Pin Name	Pin No.	I/O	Description
ANTCTL0	59	DO	Antenna tuner control
ANTCTL1	61	DO	
ANTCTL2	63	DO	
ANTCTL3	65	DO	

4.5.2. Antenna Tuner Control Interface through RFFE

Table 25: Pin Definition of Antenna Tuner Control Interface through RFFE

Pin Name	Pin No.	I/O	Description	Comment
RFFE_CLK	56	DO	Used for external MIPI IC control	If unused, keep them open.
RFFE_DATA	58	DIO	Used for external MIPI IC control	

4.6. Configuration Pins

Configuration pins are used to assist the host to identify the presence of the module in the socket and identify module type. LCUR57-WWD provides four configuration pins which are defined as below.

Table 26: Configuration Pins of the Module

Pin No.	Pin Name	I/O	Description
21	CONFIG_0	DO	Connected to GND internally.
69	CONFIG_1	DO	Connected to GND internally.
75	CONFIG_2	DO	Not connected internally
1	CONFIG_3	DO	Not connected internally

The following figure shows a reference circuit of these four pins.

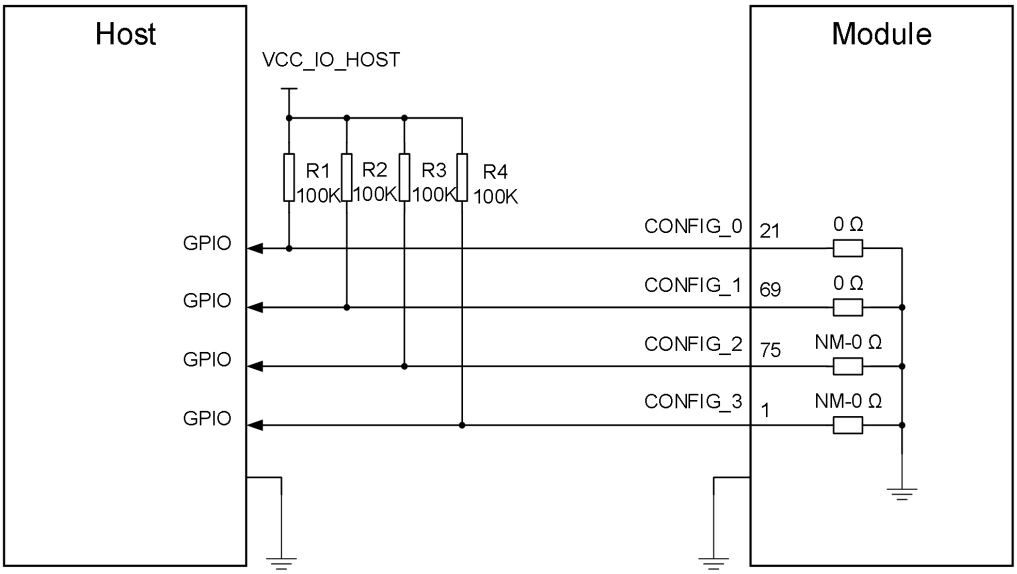

Figure 20: Recommended Circuit of LCUR57-WWD Configuration Pins

Table 27: Configuration Pins List of M.2 Specification

CONFIG_0 (Pin 21)	CONFIG_1 (Pin 69)	CONFIG_2 (Pin 75)	CONFIG_3 (Pin 1)	Module Type and Main Host Interface	Port Configuration
GND	GND	NC	NC	WWAN-PCIe, USB 3.1	2 (NetPrisma defined)

5 RF Characteristics

Appropriate antenna type and design should be used with matched antenna parameters according to specific application. It is required to perform a comprehensive functional test for the RF design before mass production of terminal products. The entire content of this chapter is provided for illustration only. Analysis, evaluation and determination are still necessary when designing target products.

The module provides one main antenna interface, one Rx-diversity antenna interface, two MIMO antenna interfaces, and one GNSS antenna interface. They are used to resist the fall of signals caused by high-speed movement and multipath effect. The impedance of antenna ports is 50 Ω.

5.1. Cellular Network

5.1.1. Antenna Interface & Frequency Bands

Table 28: LCUR57-WWD Connector Definition of Antenna Interfaces

Connector Name	I/O	Description	Comment
Main Antenna	AIO	Main antenna interface: ● LTE: TRX ● WCDMA: TRX	50 Ω impedance
Rx-diversity/ GNSS Antenna	AI	Rx-diversity/GNSS antenna interface: ● LTE: DRX ● WCDMA: DRX ● GNSS: L1	
MIMO1 Antenna	AI	MIMO1 antenna interface: ● LTE: MHB_MIMO1	
MIMO2 Antenna	AI	MIMO2 antenna interface: ● LTE: MHB_MIMO2	

Table 29: Frequency Bands

3GPP Band	Transmit	Receive	Unit
WCDMA B1	1920–1980	2110–2170	MHz
WCDMA B2	1850–1910	1930–1990	MHz
WCDMA B3	1710–1785	1805–1880	MHz
WCDMA B4	1710–1755	2110–2155	MHz
WCDMA B5	824–849	869–894	MHz
WCDMA B6	830–840	875–885	MHz
WCDMA B8	880–915	925–960	MHz
WCDAM B19	830–845	875–890	MHz
LTE-FDD B1	1920–1980	2110–2170	MHz

LTE-FDD B2	1850–1910	1930–1990	MHz
LTE-FDD B3	1710–1785	1805–1880	MHz
LTE-FDD B4	1710–1755	2110–2155	MHz
LTE-FDD B5	824–849	869–894	MHz
LTE-FDD B7	2500–2570	2620–2690	MHz
LTE-FDD B8	880–915	925–960	MHz
LTE-FDD B12	699–716	729–746	MHz
LTE-FDD B13	777–787	746–756	MHz
LTE-FDD B14	788–798	758–768	MHz
LTE-FDD B18	815–830	860–875	MHz
LTE-FDD B19	830–845	875–890	MHz
LTE-FDD B20	832–862	791–821	MHz
LTE-FDD B25	1850–1915	1930–1995	MHz
LTE-FDD B26	814–849	859–894	MHz
LTE-FDD B28	703–748	758–803	MHz
LTE-FDD B29 [7]	-	717–728	MHz
LTE-FDD B30	2305–2315	2350–2360	MHz
LTE-FDD B32 [7]	-	1452–1496	MHz
LTE-TDD B38	2570–2620	2570–2620	MHz
LTE-TDD B39	1880–1920	1880–1920	MHz
LTE-TDD B40	2300–2400	2300–2400	MHz
LTE-TDD B41	2496–2690	2496–2690	MHz
LTE-TDD B42	3400–3600	3400–3600	MHz
LTE-TDD B43	3600–3800	3600–3800	MHz
LTE-TDD B46 [7]	-	5150–5925	MHz
LTE-TDD B48	3550–3700	3550–3700	MHz
LTE-FDD B66	1710–1780	2110–2200	MHz

[7] LTE-FDD B29/B32 and LTE-TDD B46 support Rx only and are only for secondary component carrier.

5.1.2. Rx Sensitivity

The following table shows the Rx sensitivity of the module.

Table 30: Dual-Antenna Conducted RF Receiver Sensitivity (Unit: dBm)

Frequency	Rx Sensitivity [8] (Typical) (dBm)	3GPP (dBm)	Comment [9]
WCDMA B1	-110.5	-106.7	
WCDMA B2	-110	-104.7	
WCDMA B3	-111	-103.7	
WCDMA B4	-110.5	-106.7	
WCDMA B5	-112	-104.7	
WCDMA B6	-111	-106.7	
WCDMA B8	-111	-103.7	
WCDMA B19	-111	-106.7	
LTE-FDD B1	-100.7	-96.3	10 MHz
LTE-FDD B2	-100.3	-94.3	10 MHz
LTE-FDD B3	-100.6	-93.3	10 MHz
LTE-FDD B4	-100.6	-96.3	10 MHz
LTE-FDD B5	-102	-94.3	10 MHz
LTE-FDD B7	-99.4	-94.3	10 MHz
LTE-FDD B8	-101.6	-93.3	10 MHz
LTE-FDD B12	-102.3	-93.3	10 MHz
LTE-FDD B13	-102.5	-93.3	10 MHz
LTE-FDD B14	-101.8	-93.3	10 MHz
LTE-FDD B18	-102	-96.3	10 MHz
LTE-FDD B19	-102	-96.3	10 MHz
LTE-FDD B20	-102.1	-93.3	10 MHz
LTE-FDD B25	-100.3	-92.8	10 MHz
LTE-FDD B26	-101.9	-93.8	10 MHz
LTE-FDD B28	-101.9	-94.8	10 MHz

[8] Rx Sensitivity values are measured in dual antennas condition (Primary + Diversity). For single primary antenna (without Diversity), the sensitivity will drop around 3 dBm for each LTE band.

LTE-FDD B29 [10]	-101	-93.3	10 MHz
LTE-FDD B30	-99.5	-95.3	10 MHz
LTE-FDD B32 [10]	-99	-96.3	10 MHz
LTE-TDD B38	-100.1	-96.3	10 MHz
LTE-FDD B39	-100.5	-96.3	10 MHz
LTE-TDD B40	-99.2	-96.3	10 MHz
LTE-TDD B41	-99.7	-94.3	10 MHz
LTE-TDD B42	-100.7	-95.0	10 MHz
LTE-TDD B43	-100.7	-95.0	10 MHz
LTE-TDD B46 [10]	-96.5	-88.5	20 MHz
LTE-TDD B48	-100.6	-95.0	10 MHz
LTE-FDD B66	-100.4	-95.8	10 MHz

Table 31: Four-Antenna Conducted RF Receiver Sensitivity

Frequency Band	Rx Sensitivity (Typical) (dBm) [8]	3GPP (dBm)	Comment [9]
LTE-FDD B1	-103.5	-99	10 MHz
LTE-FDD B2	-103	-97	10 MHz
LTE-FDD B3	-102.8	-96	10 MHz
LTE-FDD B4	-103	-99	10 MHz
LTE-FDD B7	-102.3	-97	10 MHz
LTE-FDD B25	-103	-95.5	10 MHz
LTE-FDD B30	-102.5	-98	10 MHz
LTE-FDD B32 [11]	-102	-	10 MHz
LTE-TDD B38	-102.5	-	10 MHz
LTE-TDD B39	-102.5	-99	10 MHz
LTE-TDD B40	-102.2	-99	10 MHz

[9] The RB configuration follows 3GPP specification.
[10] The test results are based on CA_2A-29A, CA_20A-32A and CA_46A-66A.
[11] The test result is based on CA_20A-32A.

LTE-TDD B41	-102	-97	10 MHz
LTE-FDD B66	-103	-98.5	10 MHz

5.1.3. Tx Power

The following table shows the transmitting power of the module.

Table 32: LCUR57-WWD Transmitting Power

Frequency Band	Modulation	Max.	Min.	Comment
WCDMA bands	BPSK	23 dBm ±2 dB	< -50 dBm	
LTE bands	QPSK	24 dBm ±1 dB	< -40 dBm	10 MHz, 1RB
LTE-FDD (B30)	QPSK	22 dBm ±1 dB	< -40 dBm	10 MHz, 1RB
LTE-TDD (B41)	QPSK	23 dBm ±1 dB	< -40 dBm	10 MHz, 1RB
LTE-TDD (B41 HPUE [12])	QPSK	25.5 dBm +1/-1.5 dB	< -40 dBm	10 MHz, 1RB
LTE-TDD (B42/B43/B48)	QPSK	21 dBm ±1 dB	< -40 dBm	10 MHz, 1RB

5.2. GNSS [13]

5.2.1. Antenna Interface & Frequency Bands

LCUR57-WWD includes a fully integrated global navigation satellite system solution that supports GPS, GLONASS, BDS and Galileo. The module supports standard NMEA 0183 protocol, and outputs NMEA sentences at 1 Hz data update rate.

The GNSS engine is switched off by default. It has to be switched on via AT command.

Table 33: GNSS Frequency

Type	Frequency	Unit
GPS/Galileo	1575.42 ±1.023	MHz
GLONASS	1601.65 ±4.15	MHz
BDS	1561.098 ±2.046	MHz

[12] For B41 HPUE, based on the power reduction of QPSK (25.5 dBm +1/-1.5 dB), the power tolerance of 16QAM and 64QAM is +1/-2 dB.
[13] GNSS function is optional.

5.2.2. GNSS Performance

Table 34: GNSS Performance

Parameter	Description	Condition	Typ.	Unit
Sensitivity	Cold start	Autonomous	-146	dBm
	Reacquisition	Autonomous	-158	dBm
	Tracking	Autonomous	-158	dBm
TTFF	Cold start @ open sky	Autonomous	31.13	s
		XTRA start	17.87	s
	Warm start @ open sky	Autonomous	26.59	s
		XTRA start	7.07	s
	Hot start @ open sky	Autonomous	2.12	s
		XTRA start	2.6	s
Accuracy	CEP-50	Autonomous @ open sky	2	m

NOTE

1. Tracking sensitivity: the minimum GNSS signal power at which the module can maintain lock (keep positioning for at least 3 minutes continuously).
2. Reacquisition sensitivity: the minimum GNSS signal power required for the module to maintain lock within 3 minutes after loss of lock.
3. Acquisition sensitivity: the minimum GNSS signal power at which the module can fix position successfully within 3 minutes after executing cold start command.

5.3. Antenna Connectors

5.3.1. Antenna Connector Location

The module has four antenna connectors: main, Rx-diversity/GNSS, MIMO1 and MIMO2, which are shown below.

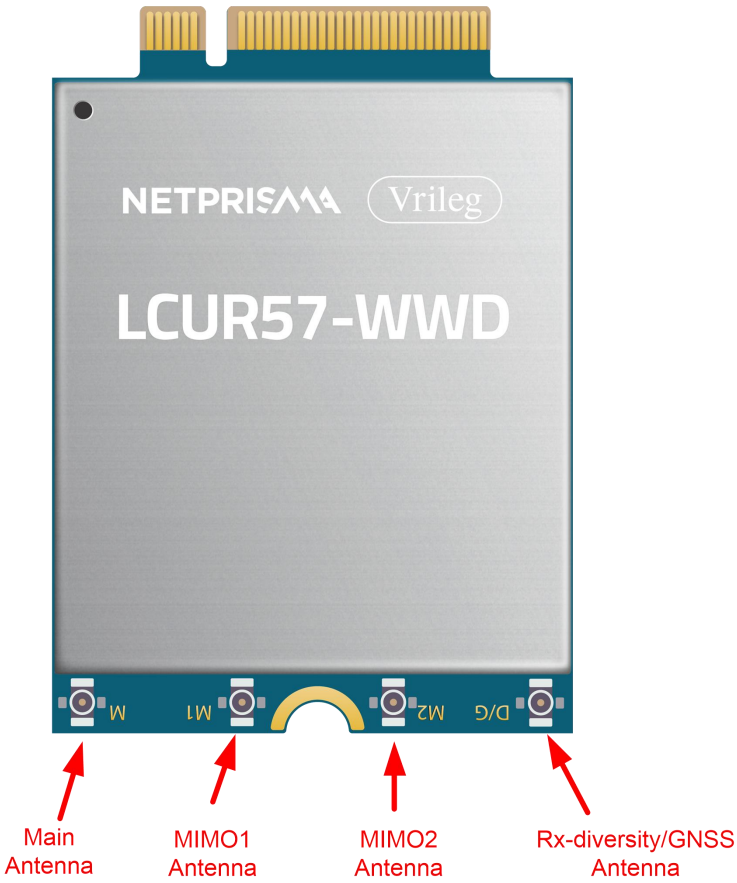

Figure 21: Antenna Connectors on the LCUR57-WWD Module

5.3.2. Antenna Connector Specifications

LCUR57-WWD is mounted with standard 2 mm × 2 mm receptacle antenna connectors for convenient antenna connection. The connector dimensions are illustrated below:

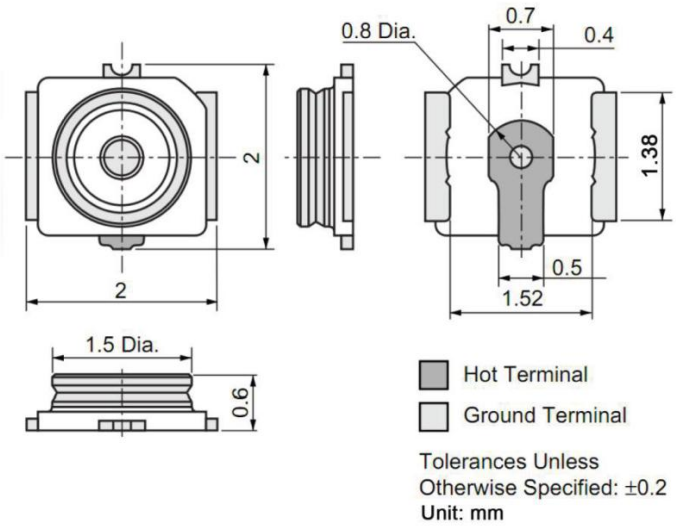

Figure 22: Dimensions of the Receptacle (Unit: mm)

Table 35: Major Specifications of the RF Connector

Item	Specification
Nominal Frequency Range	DC to 6 GHz
Nominal Impedance	50 Ω
Temperature Rating	-40 to +85 °C
Voltage Standing Wave Ratio (VSWR)	Meet the requirements of: Max. 1.3 (DC–3 GHz) Max. 1.45 (3–6 GHz)

5.3.3. Antenna Connector Installation

The receptacle RF connector used in conjunction with LCUR57-WWD will accept two types of mated plugs that will meet a maximum height of 1.2 mm using a Ø 0.81 mm coaxial cable or a maximum height of 1.4 mm utilizing a Ø 1.13 mm coaxial cable.

The following figure shows the specifications of mated plugs using Ø 0.81 mm coaxial cables.

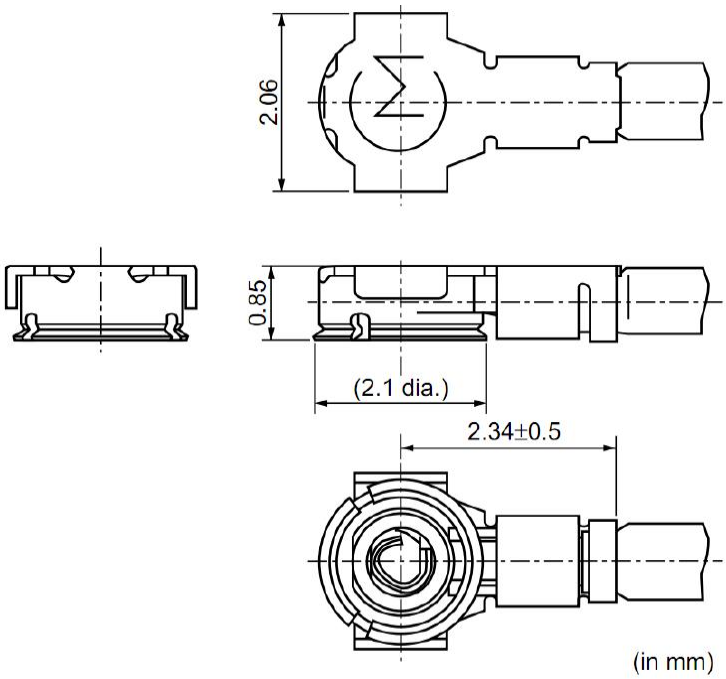

Figure 23: Dimensions of Mated Plugs (Ø 0.81 mm Coaxial Cables) (Unit: mm)

The following figure illustrates the connection between the receptacle RF connector on LCUR57-WWD and the mated plug using a Ø 0.81 mm coaxial cable.

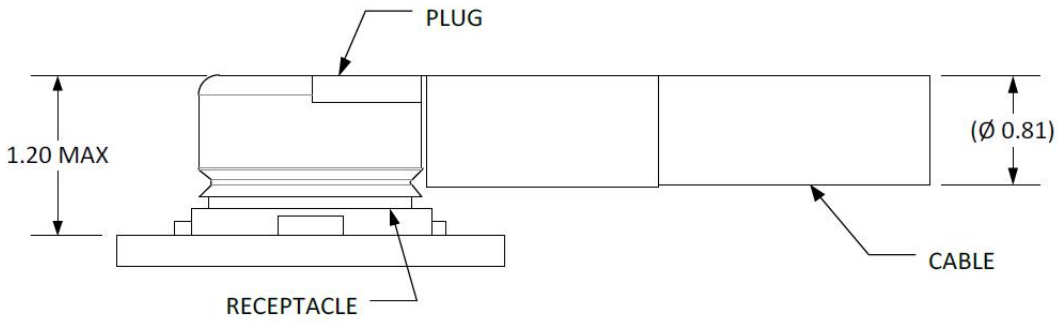

Figure 24: Space Factor of Mated Connectors (Ø 0.81 mm Coaxial Cables) (Unit: mm)

The following figure illustrates the connection between the receptacle RF connector on LCUR57-WWD and the mated plug using a Ø 1.13 mm coaxial cable.

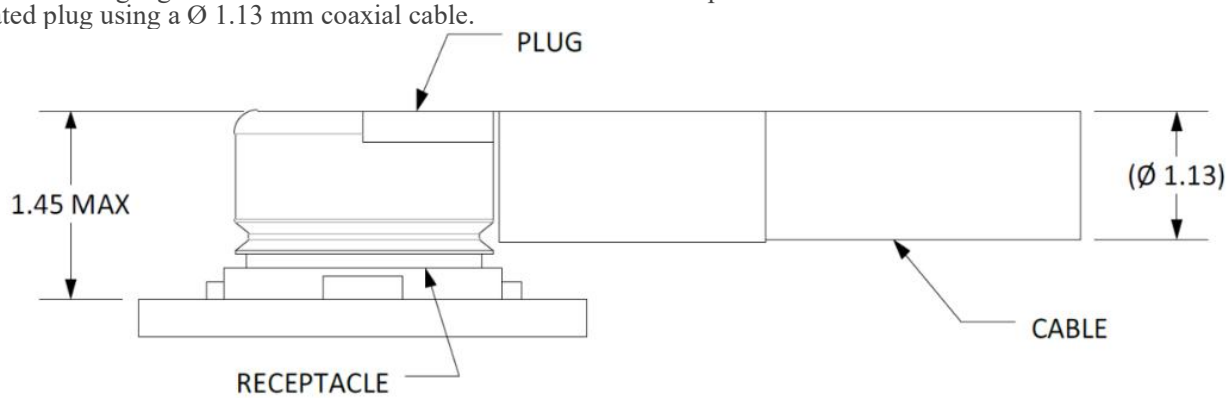

Figure 25: Space Factor of Mated Connectors (Ø 1.13 mm Coaxial Cables) (Unit: mm)

5.3.4. Recommended RF Connector Installation

5.3.4.1. Assemble Coaxial Cable Plug Manually

The illustration for plugging in a coaxial cable plug is shown below, $\theta = 90°$ is acceptable, while $\theta \neq 90°$ is not.

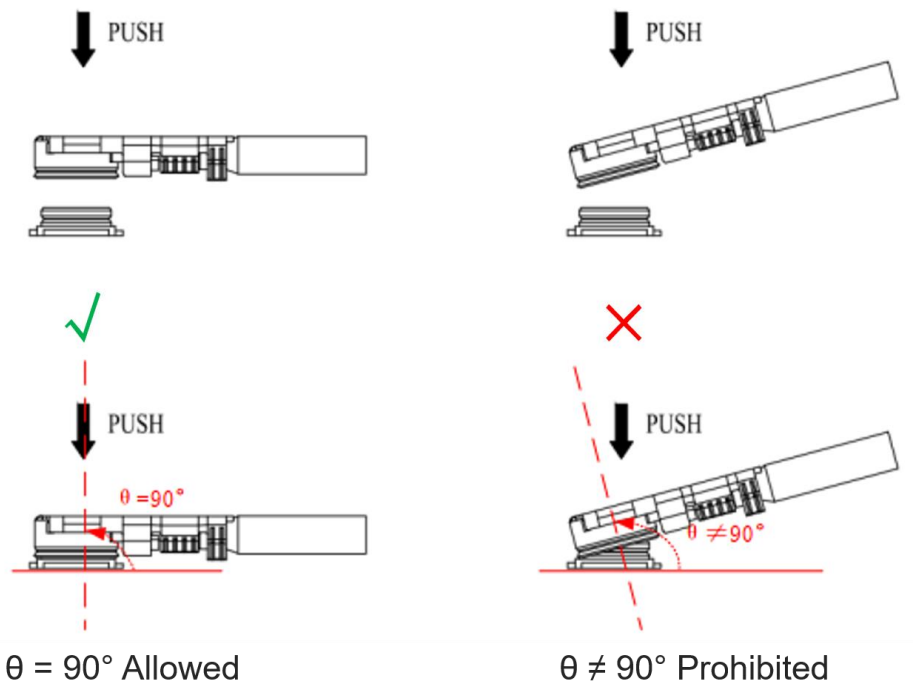

Figure 26: Plug in a Coaxial Cable Plug

The illustration of pulling out the coaxial cable plug is shown below, θ = 90° is acceptable, while θ ≠ 90° is not.

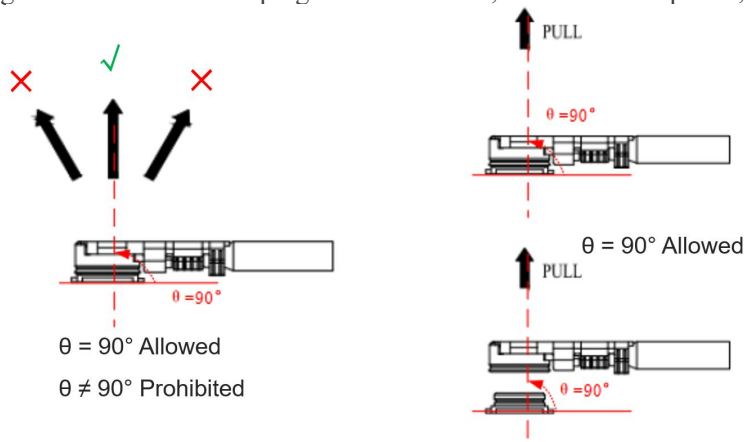

Figure 27: Pull out a Coaxial Cable Plug

5.3.4.2. Assemble Coaxial Cable Plug with Jig

The pictures of installing the coaxial cable plug with a jig is shown below, θ = 90° is acceptable, while θ ≠ 90° is not.

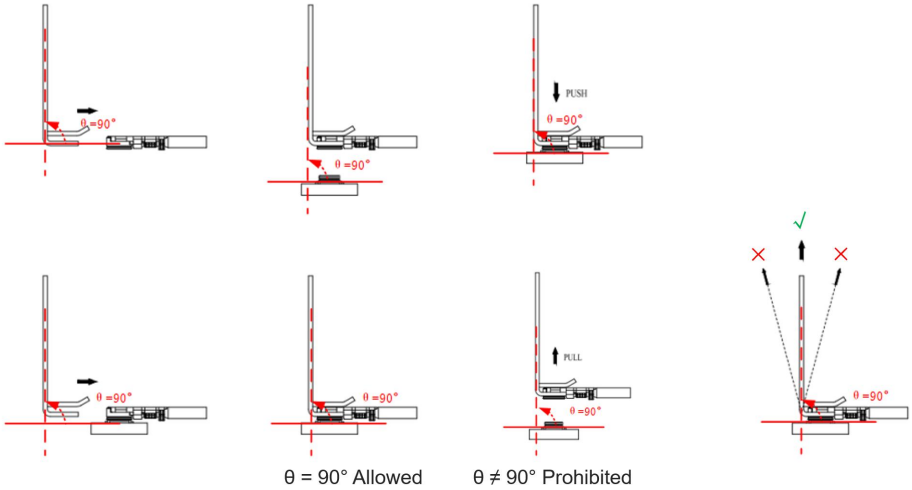

Figure 28: Install the Coaxial Cable Plug with Jig

5.3.5. Recommended Manufacturers of RF Connector and Cable

RF connectors and cables by I-PEX are recommended. For more details, visit https://www.i-pex.com.

5.4. Antenna Requirements

The following table shows the requirements on main antenna, GNSS antenna, MIMO1 and MIMO2 antennas.

Table 36: Antenna Requirements

Type	Requirements
Main Antenna (Tx/Rx) Rx-diversity/GNSS Antenna MIMO1 Antenna (Rx) MIMO2 Antenna (Rx)	● VSWR: ≤ 2 ● Efficiency: > 30 % ● Max input power: 50 W ● Input impedance: 50 Ω ● Cable insertion loss: - **< 1 dB:** LB (<1 GHz) - **< 1.5 dB:** MB (1–2.3 GHz) - **< 2 dB:** HB (> 2.3 GHz)

NOTE

Active GNSS antenna is not supported.

6 Electrical Characteristics and Reliability

6.1. Absolute Maximum Ratings

Absolute maximum ratings for power supply and voltage on digital pins of the module are listed in the following table.

Table 37: Absolute Maximum Ratings

Parameter	Min.	Max.	Unit
VCC	-0.3	4.7	V
Voltage at Digital Pins	-0.3	2.3	V

6.2. Power Supply Requirements

The typical input voltage of the module is 3.7 V. The following table shows the power supply requirements of the module.

Table 38: Power Supply Requirements

Parameter	Description	Condition	Min.	Typ.	Max.	Unit
VCC	Power supply for the module	The actual input voltages must be kept between the minimum and maximum values.	3.135	3.7	4.4	V

6.3. Digital I/O Characteristics

Table 39: Logic Levels of 1.8 V Digital I/O

Parameter	Description	Min.	Max.	Unit
VDDIO_1V8	Supply voltage	1.7	1.94	V
V_{IH}	High-level input voltage	0.65 × VDDIO_1V8	VDDIO_1V8 + 0.3	V
V_{IL}	Low-level input voltage	-0.3	0.35 × VDDIO_1V8	V

V_{OH}	High-level output voltage	VDDIO_1V8 - 0.45	VDDIO_1V8	V
V_{OL}	Low-level output voltage	0	0.45	V

Table 40: Logic Levels of 3.3 V Digital I/O

Parameter	Description	Min.	Max.	Unit
3.3 V	Supply voltage	3.135	3.465	V
V_{IH}	High-level input voltage	2.0	3.6	V
V_{IL}	Low-level input voltage	-0.5	0.8	V

Table 41: (U)SIM High/Low-voltage I/O Requirements

Parameter	Description	Min.	Max.	Unit
V_{IH}	High-level input voltage	0.7 × USIM_VDD	USIM_VDD + 0.3	V
V_{IL}	Low-level input voltage	-0.3	0.2 × USIM_VDD	V
V_{OH}	High-level output voltage	0.8 × USIM_VDD	-	V
V_{OL}	Low-level output voltage	-	0.4	V

6.4. Operating and Storage Temperatures

Table 42: Operating and Storage Temperatures

Parameter	Min.	Typ.	Max.	Unit
Operating Temperature Range [14]	-25	+25	+75	ºC
Extended Temperature Range [15]	-40	-	+85	ºC
Storage Temperature Range	-40	-	+90	ºC

6.5. Power Consumption

Table 43: LCUR57-WWD Power Consumption

Mode	Condition	Typ.	Unit
OFF state	Power off	TBD	µA
Sleep State	-	TBD	mA
ldle State	-	TBD	mA
WCDMA Data Transmission (GNSS Off)	-	TBD	mA
LTE Data Transmission (GNSS OFF)	-	TBD	mA
WCDMA	-	TBD	mA

6.6. ESD Protection

Static electricity occurs naturally and it may damage the module. Therefore, applying proper ESD countermeasures and handling methods is imperative. For example, wear anti-static gloves during the development, production, assembly and testing of the module; add ESD protection components to the ESD sensitive interfaces and points in the product design.

[14] To meet the normal operating temperature range requirements, it is necessary to ensure effective thermal dissipation, e.g., by adding passive or active heatsinks, heat pipes, vapor chambers. Within the temperature range of -10 °C to +55 °C， the mentioned RF performance margins higher than 3GPP specifications can be guaranteed. When temperature goes beyond temperature range of -10 °C to 55 °C, a few RF performances of module may be slightly off 3GPP specifications.

[15] To meet the extended operating temperature range requirements, it is necessary to ensure effective thermal dissipation, e.g., by adding passive or active heatsinks, heat pipes, vapor chambers. Within this range, the module remains the ability to establish and maintain functions such as SMS, without any unrecoverable malfunction. Radio spectrum and radio network are not influenced, while one or more specifications, such as P_{out}, may undergo a reduction in value, exceeding the specified tolerances of 3GPP. When the temperature returns to the normal operating temperature level, the module will meet 3GPP specifications again.

Table 44: Electrostatic Discharge Characteristics (Temperature: 25–30 °C, Humidity: 40 ±5 %)

Tested Interface	Contact Discharge	Air Discharge	Unit
VCC, GND	±5	±10	kV
Antenna Interfaces	±4	±8	kV
Other Interfaces	±0.5	±1	kV

6.7. Thermal Dissipation

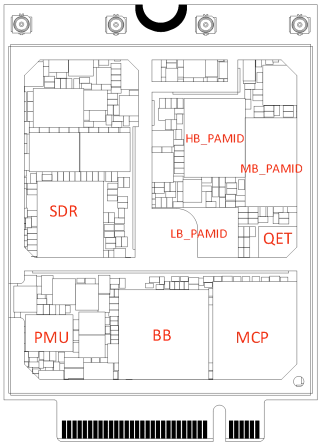

Figure 29: Distribution of Heat Source Chips Inside the Module

The module offers the best performance when all internal IC chips are working within their operating temperatures. When the IC chip reaches or exceeds the maximum junction temperature, the module may still work but the performance and function (such as RF output power and data rate) will be affected to a certain extent. Therefore, the thermal design should be maximally optimized to ensure all internal IC chips always work within the recommended operating temperature range.

The following principles for thermal consideration are provided for reference:

- Keep the module away from heat sources on your PCB, especially high-power components such as processor, power amplifier, and power supply.
- Maintain the integrity of the PCB copper layer and drill as many thermal vias as possible.
- Expose the copper in the PCB area where module is mounted.
- Apply a soft thermal pad with appropriate thickness and high thermal conductivity between the module and the PCB to conduct heat.
- Follow the principles below when the heatsink is necessary:
  - Do not place large size components in the area where the module is mounted on your PCB to reserve enough place for heatsink installation.
  - Attach the heatsink to the shielding cover of the module; In general, the base plate area of the heatsink should be larger than the module area to cover the module completely;
  - Choose the heatsink with adequate fins to dissipate heat;
  - Choose a TIM (Thermal Interface Material) with high thermal conductivity, good softness and good wettability and place it between the heatsink and the module;

- Fasten the heatsink with four screws to ensure that it is in close contact with the module to prevent the heatsink from falling off during the drop, vibration test, or transportation.

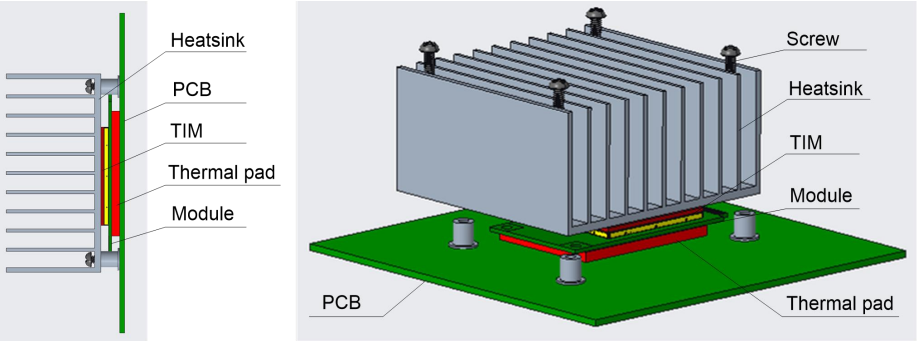

Figure 30: Placement and Fixing of the Heatsink

7 Mechanical Dimensions

This chapter mainly describes mechanical dimensions and packaging specifications of the module. All dimensions are measured in millimeter (mm), and the dimensional tolerances are ±0.15 mm unless otherwise specified.

7.1. Mechanical Dimensions

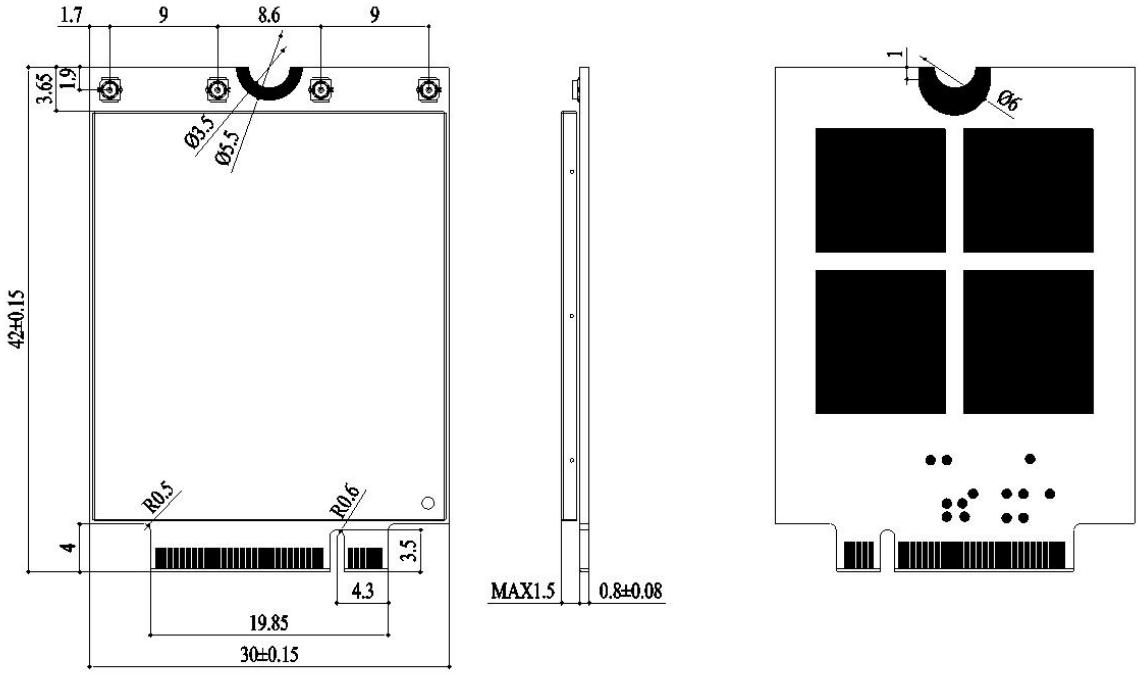

Figure 31: Mechanical Dimensions

NOTE

The package warpage level of the module refers to the *JEITA ED-7306* standard.

7.2. Top and Bottom Views

Figure 32: Top and Bottom Views of the Module

NOTE

Images above are for illustration purpose only and may differ from the actual module. For authentic appearance and label, please refer to the module received from NetPrisma.

7.3. M.2 Connector

LCUR57-WWD adopts a standard PCI Express M.2 connector which compiles with the directives and standards listed in *PCI Express M.2 Specification Revision 4.0*.

7.4. Packaging Specifications

This chapter describes only the key parameters and process of packaging. All figures below are for reference only. The appearance and structure of the packaging materials are subject to the actual delivery.

The module adopts blister tray packaging and details are as follow:

7.4.1. Blister Tray

Dimension details are as follow:

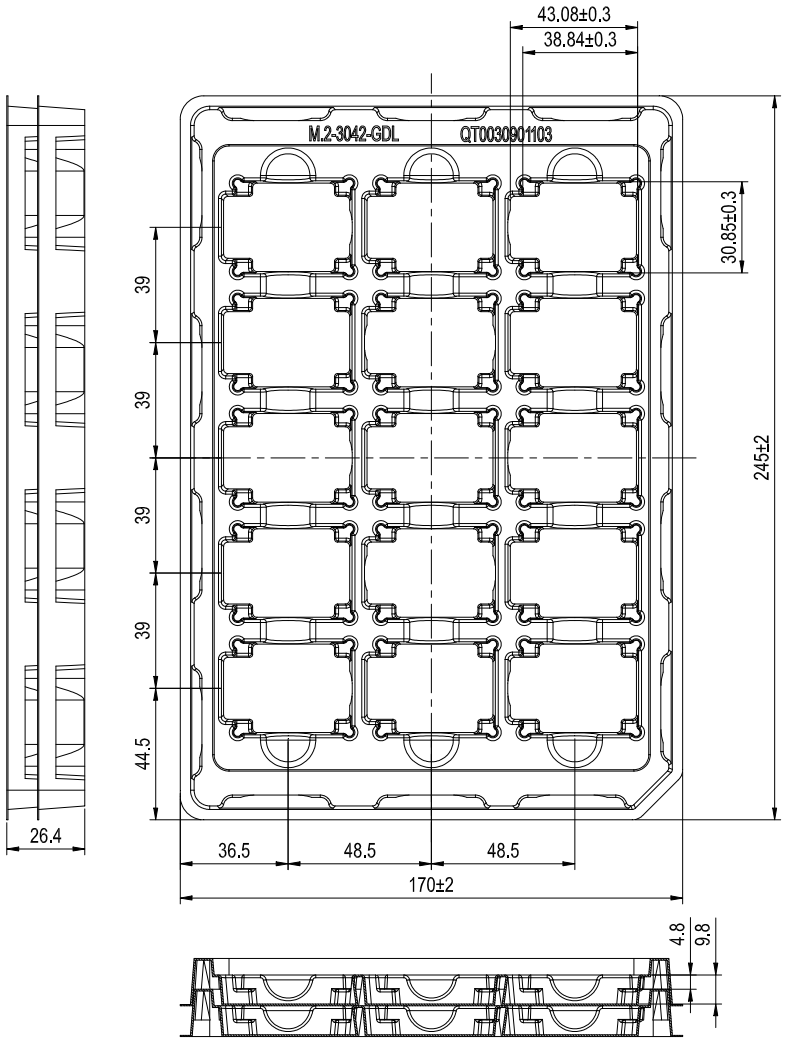

Figure 33: Blister Tray Dimension Drawing

7.4.2. Packaging Process

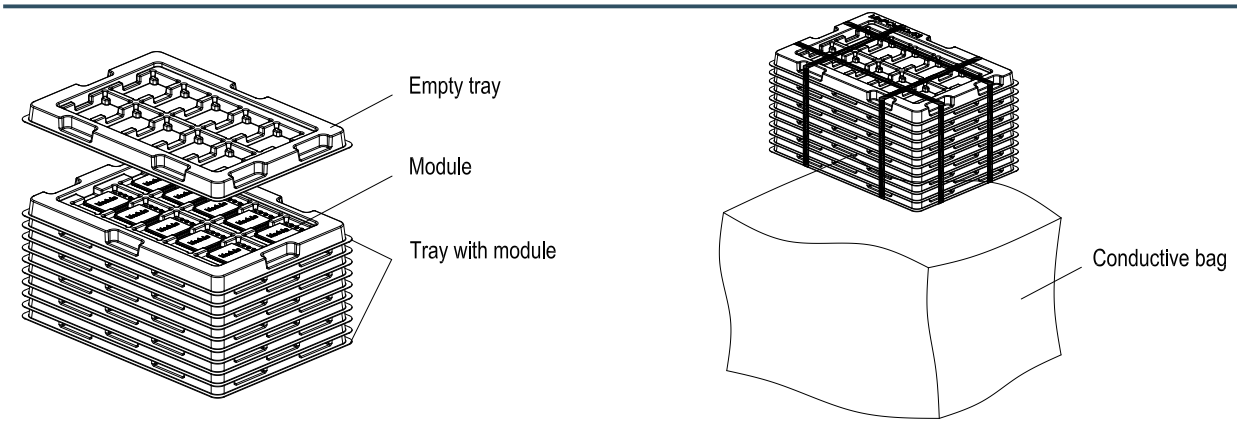

Each blister tray packs 15 modules. Stack blister trays with modules together, and put empty blister tray on the top.	10 1	Packing 11 blister trays together and then put blister trays into conductive bag, seal and pack the conductive bag.
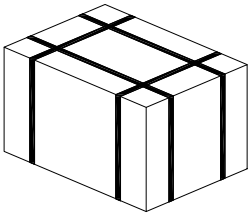		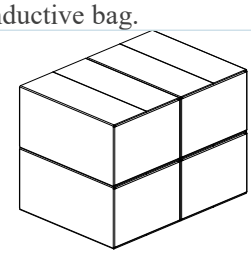
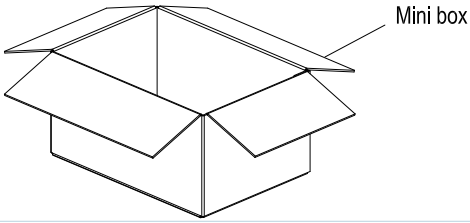		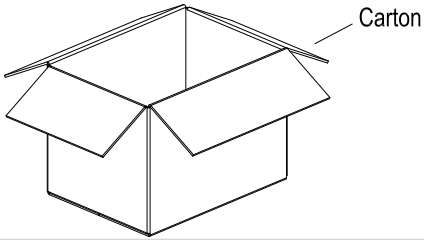
Put the seal-packed blister trays into the mini box. mini box can pack 150 modules.	1	Put 4 packaged mini boxes into 1 carton box and then seal it. 1 carton box can pack 600 modules.

Figure 34: Packaging Process

8 Storage and Packaging

8.1. Storage Conditions

The storage requirements are shown below.

1. Recommended Storage Condition: the temperature should be 23 ±5 °C and the relative humidity should be 35–60 %.

2. Shelf life: 12 months in Recommended Storage Condition.

NOTE

Pay attention to ESD protection, such as wearing anti-static gloves, when touching the modules.

8.2. Notification

Please follow the principles below in module application.

8.2.1. Coating

If a conformal coating is necessary for the module, do NOT use any coating material that may chemically react with the PCB or shielding cover, and prevent the coating material from flowing into the module.

8.2.2. Cleaning

Avoid using ultrasonic technology for module cleaning since it can damage crystals inside the module.

8.2.3. Installing

The module needs to be fixed firmly to avoid poor contact caused by shaking. When installing the module, it is recommended to be mounted on the socket with a screw as shown below.

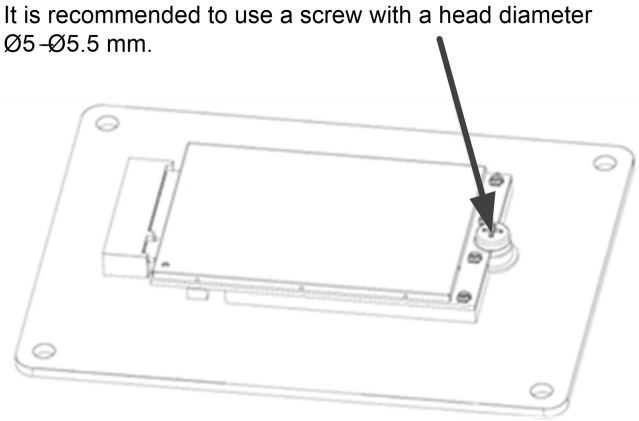

Figure 35: Installation Schematic

9 Appendix A References

Table 45: Related Documents

Document Name
[1] NetPrisma_LCUR57-WWD_CA_Feature
[2] NetPrisma_LCUR57-WWD_AT_Commands_Manual
[3] NetPrisma_LCUR57-WWD_GNSS_Application_Note
[4] NetPrisma_LTE_Module_Thermal_Design_Guide

Table 46: Terms and Abbreviations

Abbreviation	Description
bps	Bits Per Second
DC-HSPA+	Dual-carrier High Speed Packet Access
DFOTA	Delta Firmware Upgrade Over The Air
DL	Downlink
DRx	Diversity Receive
ESD	Electrostatic Discharge
FDD	Frequency Division Duplexing
GLONASS	Global Navigation Satellite System (Russia)
GNSS	Global Navigation Satellite System
GPS	Global Positioning System
GSM	Global System for Mobile Communications
HSPA	High Speed Packet Access
HSUPA	High Speed Uplink Packet Access
kbps	Kilo Bits Per Second
LED	Light Emitting Diode
LTE	Long Term Evolution

Mbps	Million Bits Per Second
ME	Mobile Equipment (Module)
MIMO	Multiple-Input Multiple-Output
MLCC	Multiplayer Ceramic Chip Capacitor
MMS	Multimedia Messaging Service
MO	Mobile Originated
MT	Mobile Terminated
NMOS	N-type Metal-Oxide-Semiconductor
PDU	Protocol Data Unit
PPP	Point-to-Point Protocol
PRx	Primary Receive
RF	Radio Frequency
Rx	Receive
SAR	Specific Absorption Rate
SMS	Short Message Service
Tx	Transmit
UART	Universal Asynchronous Receiver & Transmitter
UL	Uplink
URC	Unsolicited Result Code
(U)SIM	(Universal) Subscriber Identification Module
WCDMA	Wideband Code Division Multiple Access

FCC ID: 2BEY3LCUR57WWDA

OEM/Integrators Installation Manual

Important Notice to OEM integrators

1. This module is limited to OEM installation ONLY.
2. This module is limited to installation in mobile or fixed applications, according to Part 2.1091(b).
3. The separate approval is required for all other operating configurations, including portable configurations with respect to Part 2.1093 and different antenna configurations
4. For FCC Part 15.31 (h) and (k): The host manufacturer is responsible for additional testing to verify compliance as a composite system. When testing the host device for compliance with Part 15 Subpart B, the host manufacturer is required to show compliance with Part 15 Subpart B while the transmitter module(s) are installed and operating. The modules should be transmitting and the evaluation should confirm that the module's intentional emissions are compliant (i.e. fundamental and out of band emissions). The host manufacturer must verify that there are no additional unintentional emissions other than what is permitted in Part 15 Subpart B or emissions are complaint with the transmitter(s) rule(s).

The Grantee will provide guidance to the host manufacturer for Part 15 B requirements if needed.

Important Note

notice that any deviation(s) from the defined parameters of the antenna trace, as described by the instructions, require that the host product manufacturer must notify to NETPRISMA INC. that they wish to change the antenna trace design. In this case, a Class II permissive change application is required to be filed by the USI, or the host manufacturer can take responsibility through the change in FCC ID (new application) procedure followed by a Class II permissive change application.

End Product Labeling

When the module is installed in the host device, the FCC/IC ID label must be visible through a window on the final device or it must be visible when an access panel, door or cover is easily re-moved. If not, a second label must be placed on the outside of the final device that contains the following text: “Contains FCC ID: 2BEY3LCUR57WWDA”

“Contains IC: 32052-LCUR57WWDA “

The FCC ID/IC ID can be used only when all FCC/IC compliance requirements are met.

Antenna Installation

(1) The antenna must be installed such that 20 cm is maintained between the antenna and users,

(2) The transmitter module may not be co-located with any other transmitter or antenna.

In the event that these conditions cannot be met (for example certain laptop configurations or co-location with another transmitter), then the FCC/IC authorization is no longer considered valid and the FCC ID/IC ID cannot be used on the final product. In these circumstances, the OEM integrator will be responsible for re-evaluating the end product (including the transmitter) and obtaining a separate FCC/IC authorization.

Band	Antenna Type	Allowed Max Gain (dBi)
WCDMA B2	PIFA	3.87
WCDMA B4	PIFA	3.91
WCDMA B5	PIFA	3.32
LTE B2	PIFA	3.87
LTE B4	PIFA	3.91
LTE B5	PIFA	3.32
LTE B7	PIFA	3.16
LTE B12	PIFA	3.19
LTE B13	PIFA	3.28
LTE B14	PIFA	3.25
LTE B25	PIFA	3.87
LTE B26	PIFA	3.32
LTE B30	PIFA	0.98
LTE B38	PIFA	3.07
LTE B41	PIFA	3.16
LTE B42	PIFA	2.35
LTE B43	PIFA	1.94
LTE B48	PIFA	1
LTE B66	PIFA	3.91

Manual Information to the End User

The OEM integrator has to be aware not to provide information to the end user regarding how to install or remove this RF module in the user's manual of the end product which integrates this module. The end user manual shall include all required regulatory information/warning as show in this manual.

Federal Communication Commission Interference Statement

This device complies with Part 15 of the FCC Rules. Operation is subject to the following two conditions: (1) This device may not cause harmful interference, and (2) this device must accept any interference received, including interference that may cause undesired operation.
This equipment has been tested and found to comply with the limits for a Class B digital device, pursuant to Part 15 of the FCC Rules. These limits are designed to provide reasonable protection against harmful interference in a residential installation. This equipment generates, uses and can radiate radio frequency energy and, if not installed and used in accordance with the instructions, may cause harmful interference to radio communications. However, there is no guarantee that interference will not occur in a particular installation. If this equipment does cause harmful interference to radio or television reception, which can be determined by turning the equipment off and on, the user is encouraged to try to correct the interference by one of the following measures:
- Reorient or relocate the receiving antenna.
- Increase the separation between the equipment and receiver.
- Connect the equipment into an outlet on a circuit different from that to which the receiver is connected.
- Consult the dealer or an experienced radio/TV technician for help.

Any changes or modifications not expressly approved by the party responsible for compliance could void the user's authority to operate this equipment. This transmitter must not be co-located or operating in conjunction with any other antenna or transmitter.

List of applicable FCC rules

This module has been tested and found to comply with part 22, part 24, part 27, part 90, and part 96 requirements for Modular Approval.
The modular transmitter is only FCC authorized for the specific rule parts (i.e., FCC transmitter rules) listed on the grant, and that the host product manufacturer is responsible for compliance to any other FCC rules that apply to the host not covered by the modular transmitter grant of certification. If the grantee markets their product as being Part 15 Subpart B compliant (when it also contains unintentional-radiator digital circuity), then the grantee shall provide a notice stating that the final host product still requires Part 15 Subpart B compliance testing with the modular transmitter installed.

This device is intended only for OEM integrators under the following conditions: (For module device use)

1) The antenna must be installed such that 20 cm is maintained between the antenna and users, and
2) The transmitter module may not be co-located with any other transmitter or antenna.
As long as 2 conditions above are met, further transmitter test will not be required. However, the OEM integrator is still responsible for testing their end-product for any additional compliance requirements required with this module installed.

Radiation Exposure Statement

This equipment complies with FCC radiation exposure limits set forth for an uncontrolled environment. This equipment should be installed and operated with minimum distance 20 cm between the radiator & your body.

IC: 32052-LCUR57WWDA

Industry Canada Statement

This device complies with Industry Canada's licence-exempt RSSs. Operation is subject to the following two conditions:
(1) This device may not cause interference; and
(2) This device must accept any interference, including interference that may cause undesired operation of the device.

Le présent appareil est conforme aux CNR d'Industrie Canada applicables aux appareils radio exempts de licence. L'exploitation est autorisée aux deux conditions suivantes:
(1) l'appareil ne doit pas produire de brouillage, et
(2) l'utilisateur de l'appareil doit accepter tout brouillage radioélectrique subi, même si le brouillage est susceptible d'en compromettre le fonctionnement."

Radiation Exposure Statement

This equipment complies with IC radiation exposure limits set forth for an uncontrolled environment. This equipment should be installed and operated with minimum distance 20 cm between the radiator & your body.

Déclaration d'exposition aux radiations:

Cet équipement est conforme aux limites d'exposition aux rayonnements ISED établies pour un environnement non contrôlé. Cet équipement doit être installé et utilisé avec un minimum de 20 cm de distance entre la source de rayonnement et votre corps.

This device is intended only for OEM integrators under the following conditions: (For module device use)

1) The antenna must be installed such that 20 cm is maintained between the antenna and users, and
2) The transmitter module may not be co-located with any other transmitter or antenna.
As long as 2 conditions above are met, further transmitter test will not be required. However, the OEM integrator is still responsible for testing their end-product for any additional compliance requirements required with this module installed.

Cet appareil est conçu uniquement pour les intégrateurs OEM dans les conditions suivantes: (Pour utilisation de dispositif module)

1) L'antenne doit être installée de telle sorte qu'une distance de 20 cm est respectée entre l'antenne et les utilisateurs, et
2) Le module émetteur peut ne pas être coïmplanté avec un autre émetteur ou antenne.

Tant que les 2 conditions ci-dessus sont remplies, des essais supplémentaires sur l'émetteur ne seront pas nécessaires. Toutefois, l'intégrateur OEM est toujours responsable des essais sur son produit final pour toutes exigences de conformité supplémentaires requis pour ce module installé.

IMPORTANT NOTE:

In the event that these conditions cannot be met (for example certain laptop configurations or colocation with another transmitter), then the Canada authorization is no longer considered valid and the IC ID cannot be used on the final product. In these circumstances, the OEM integrator will be responsible for re-evaluating the end product (including the transmitter) and obtaining a separate Canada authorization.

NOTE IMPORTANTE:

Dans le cas où ces conditions ne peuvent être satisfaites (par exemple pour certaines configurations d'ordinateur portable ou de certaines co-localisation avec un autre émetteur), l'autorisation du Canada n'est plus considéré comme valide et l'ID IC ne peut pas être utilisé sur le produit final. Dans ces circonstances, l'intégrateur OEM sera chargé de réévaluer le produit final (y compris l'émetteur) et l'obtention d'une autorisation distincte au Canada.

End Product Labeling

This transmitter module is authorized only for use in device where the antenna may be installed such that 20 cm may be maintained between the antenna and users. The final end product must be labeled in a visible area with the following: "Contains IC: 32052-LCUR57WWDA".

Plaque signalétique du produit final

Ce module émetteur est autorisé uniquement pour une utilisation dans un dispositif où l'antenne peut être installée de telle sorte qu'une distance de 20cm peut être maintenue entre l'antenne et les utilisateurs. Le

produit final doit être étiqueté dans un endroit visible avec l'inscription suivante:
"Contient des IC: 32052-LCUR57WWDA ".

Manual Information To the End User

The OEM integrator has to be aware not to provide information to the end user regarding how to install or remove this RF module in the user's manual of the end product which integrates this module.
The end user manual shall include all required regulatory information/warning as show in this manual.

Manuel d'information à l'utilisateur final

L'intégrateur OEM doit être conscient de ne pas fournir des informations à l'utilisateur final quant à la façon d'installer ou de supprimer ce module RF dans le manuel de l'utilisateur du produit final qui intègre ce module.
Le manuel de l'utilisateur final doit inclure toutes les informations réglementaires requises et avertissements comme indiqué dans ce manuel.