TEST REPORT

Applicant:	NETPRISMA INC.
EUT Description:	Multi-mode Smart LTE Module with Wi-Fi & Bluetooth
Model Tested:	SUS600-LD
Model Covered:	SUS609-LD
Brand:	Vrileg
FCC ID:	2BEY3SUS600LDA
Standards:	FCC CFR Title 47 Part 2
	FCC CFR Title 47 Part 22
	FCC CFR Title 47 Part 24
	FCC CFR Title 47 Part 27
	FCC CFR Title 47 Part 90
Date of Receipt:	2025/03/06
Date of Test:	2025/03/06 to 2025/04/14
Date of Issue:	2025/04/16

TOWE. tested the above equipment in accordance with the requirements set forth in the above standards. The test results show that the equipment tested is capable of demonstrating compliance with the requirements as documented in this report.

the results documented in this report apply only the tested sample, under the conditions and modes of operation as described herein. It is the manufacturer's responsibility assure that additional production units of the model are manufactured with identical electrical and mechanical components. All sample tested were in good operating condition throughout the entire test program. Measurement Uncertainties are published for informational purposes only and were not taken into account unless noted otherwise. without written approval of TOWE, the test report shall not be reproduced except in full.

ACCREDITED
CERTIFICATE #7088.01

Huang Kun
Approved By:

Chen Chengfu
Reviewed By:

All rights reserved. Unless otherwise specified, no part of this report may be reproduced or utilized in any part, form or by any means, electronic or mechanical, including photocopying and microfilm, without permission in writing from TOWE.

Revision History

Rev.	Issue Date	Description	Revised by
01	2025/04/16	Original	Chen Chengfu

All rights reserved. Unless otherwise specified, no part of this report may be reproduced or utilized in any part, form or by any means, electronic or mechanical, including photocopying and microfilm, without permission in writing from TOWE.

Product Differentiation Statement

SUS600-LD and SUS609-LD both use Qualcomm QCM6125 chipset and share the same HW design, they just have different OS and use different EMCP as following:

Designator	SUS600-LD (Part Description)	SUS609-LD (Part Description)
System	Android	Linux
U0901(EMCP)	BWCA2KZC-64G	NE6F8FKAPAXAI-KF

Above changes won't impact the protocol and RF performance.

So, only the test data for Model No.(SUS600-LD) was presented in the report.

All rights reserved. Unless otherwise specified, no part of this report may be reproduced or utilized in any part, form or by any means, electronic or mechanical, including photocopying and microfilm, without permission in writing from TOWE.

Summary of Test Results

FCC Part	Test Band	Test Item	Test Result
§2.1046 §22.913(a)(5) §27.50(b)(9) §27.50(c)(10) §90.542(a)	LTE Band 5/26(824 ~ 849MHz) LTE Band 13 LTE Band 12/17/71 LTE Band 14	Effective Radiated Power	Pass
§2.1046 §24.232(c) §27.50(d)(4) §27.50(h)(2)	LTE Band 2/25 LTE Band 4/66 LTE Band 7/41	Effective Isotropic Radiated Power	Pass
§2.1046 §90.635(b)	LTE Band 26(814 ~ 824MHz)	Transmitter Conducted Output Power	Pass
§22.913(d) §24.232(d) §27.50(d)(5)	LTE Band 5/26(824 ~ 849MHz) LTE Band 2/25 Others Band	Peak-Average Ratio	Pass
§2.1049	All Band	Occupied Bandwidth	Pass
§2.1051 §90.210(b) §90.691(a)	LTE Band 14 LTE Band 26(814 ~ 824MHz)	Emission Mask	Pass
§2.1051 §22.917(a) §24.238(a) §27.53(c) §27.53(g) §27.53(h) §27.53(m) §90.543(e)(2)(3)	LTE Band 5/26(824 ~ 849MHz) LTE Band 2/25 LTE Band 13 LTE Band 12/17/71 LTE Band 4/66 LTE Band 7/41 LTE Band 14	Band Edge	Pass
§2.1051 §22.917(a) §24.238(a) §27.53(c) §27.53(g) §27.53(h) §27.53(m) §90.691 §90.543(c)(f)	LTE Band 5/26(824 ~ 849MHz) LTE Band 2/25 LTE Band 13 LTE Band 12/17/71 LTE Band 4/66 LTE Band 7/41 LTE Band 26(814 ~ 824MHz) LTE Band 14	Spurious Emission at Antenna Terminals	Pass
§2.1053 §22.917(a) §24.238(a) §27.53(c)&(f) §27.53(g) §27.53(h) §27.53(m) §90.691 §90.543(c)(f)	LTE Band 5/26(824 ~ 849MHz) LTE Band 2/25 LTE Band 13 LTE Band 12/17/71 LTE Band 4/66 LTE Band 7/41 LTE Band 26(814 ~ 824MHz) LTE Band 14	Field Strength of Spurious Radiation	Pass

All rights reserved. Unless otherwise specified, no part of this report may be reproduced or utilized in any part, form or by any means, electronic or mechanical, including photocopying and microfilm, without permission in writing from TOWE.

FCC Part	Test Band	Test Item	Test Result
§2.1055 §22.355 §24.235 §27.54 §90.213	 LTE Band 5/26(824 ~ 849MHz) LTE Band 2/25 Others Band LTE Band 26(814 ~ 824MHz)/14	Frequency Stability	Pass
Remark: Pass: Meet the requirement.			

All rights reserved. Unless otherwise specified, no part of this report may be reproduced or utilized in any part, form or by any means, electronic or mechanical, including photocopying and microfilm, without permission in writing from TOWE.

Table of Contents

1 General Description 7
1.1 Lab Information 7
1.1.1 Testing Location 7
1.1.2 Test Facility / Accreditations 7
1.2 Client Information 7
1.2.1 Applicant 7
1.2.2 Manufacturer 7
1.3 Product Information 8
2 Test Configuration 10
2.1 Test Channel 10
2.2 Test Mode 14
2.3 Support Unit used in test 14
2.4 Test Environment 14
2.5 Test RF Cable 14
2.6 Modifications 14
2.7 Test Setup Diagram 15
2.7.1 Conducted Configuration 15
2.7.2 Radiated Configuration 16
3 Equipment and Measurement Uncertainty 17
3.1 Test Equipment List 17
3.2 Measurement Uncertainty 18
4 Test Results 19
4.1 Output Power (ERP / EIRP / Conducted Power) 19
4.2 Peak-Average Ratio 21
4.3 Occupied Bandwidth 22
4.4 Band Edge and Emission Mask 23
4.5 Spurious Emission at Antenna Terminals 25
4.6 Field Strength of Spurious Radiation 26
4.7 Frequency Stability V.S. Temperature, Voltage 28
5 Test Setup Photos 29
Appendix 30

All rights reserved. Unless otherwise specified, no part of this report may be reproduced or utilized in any part, form or by any means, electronic or mechanical, including photocopying and microfilm, without permission in writing from TOWE.

1 General Description

1.1 Lab Information

1.1.1 Testing Location

These measurements tests were conducted at the Sushi TOWE Wireless Testing(Shenzhen) Co., Ltd. facility located at F401 and F101, Building E, Hongwei Industrial Zone, Liuxian 3rd Road, Bao'an District, Shenzhen, China. The measurement facility is compliant with the test site requirements specified in ANSI C63.4-2014
Tel.: +86-755-27212361
Contact Email: info@towewireless.com

1.1.2 Test Facility / Accreditations

A2LA (Certificate Number: 7088.01)
This laboratory is accredited in accordance with the recognized International Standard ISO/IEC 17025:2017 General requirements for the competence of testing and calibration laboratories. This accreditation demonstrates technical competence for a defined scope and the operation of a laboratory quality management system (refer to joint ISO-ILAC-IAF Communiqué dated April 2017).

FCC Designation No.: CN1353
Sushi TOWE Wireless Testing(Shenzhen) Co., Ltd. has been recognized as an accredited testing laboratory. Designation Number: CN1353.

ISED CAB identifier: CN0152
Sushi TOWE Wireless Testing(Shenzhen) Co., Ltd. has been recognized by ISED as an accredited testing laboratory.
CAB identifier: CN0152
Company Number: 31000

1.2 Client Information

1.2.1 Applicant

Applicant:	NETPRISMA INC.
Address:	1301 6TH AVE, SEATTLE, WA, 98101-2304, UNITED STATES

1.2.2 Manufacturer

Manufacturer:	NETPRISMA INC.
Address:	1301 6TH AVE, SEATTLE, WA, 98101-2304, UNITED STATES

All rights reserved. Unless otherwise specified, no part of this report may be reproduced or utilized in any part, form or by any means, electronic or mechanical, including photocopying and microfilm, without permission in writing from TOWE.

1.3 Product Information

EUT Description:	Multi-mode Smart LTE Module with Wi-Fi & Bluetooth		
Model Tested:	SUS600-LD		
Model Covered:	SUS609-LD		
Brand:	Vrileg		
Hardware Version:	R1.0		
Software Version:	SUS600LDNA0201 SUS609LDNA6001		
SN:	RF Conducted	P1C24EQ0D000099	
	RSE	D1C25AM1T000064	
Device Capabilities:			
Modulation Type:	LTE:	☒ QPSK, ☒ 16QAM	
Operation Frequency Range:	Band	TX Frequency	RX Frequency
	LTE Band 2	1850 ~ 1910 MHz	1930 ~ 1990 MHz
	LTE Band 4	1710 ~ 1755 MHz	2110 ~ 2155 MHz
	LTE Band 5	824 ~ 849 MHz	869 ~ 894 MHz
	LTE Band 7	2500 ~ 2570 MHz	2620 ~ 2690 MHz
	LTE Band 12	699 ~ 716 MHz	729 ~ 746 MHz
	LTE Band 13	777 ~ 787 MHz	746 ~ 756 MHz
	LTE Band 14	788 ~ 798 MHz	758 ~ 768 MHz
	LTE Band 17	704 ~ 716 MHz	734 ~ 746 MHz
	LTE Band 25	1850 ~ 1915MHz	1930 ~ 1995 MHz
	LTE Band 26 (814 ~ 824 MHz)	814 ~ 824MHz	859 ~ 869 MHz
	LTE Band 26 (824 ~ 849 MHz)	824 ~ 849 MHz	869 ~ 894 MHz
	LTE Band 41	2496 ~ 2690MHz	2496 ~ 2690MHz
	LTE Band 66	1710 ~ 1780 MHz	2110 ~ 2200 MHz
	LTE Band 71	663 ~ 698 MHz	617 ~ 652 MHz
Power Class:	Class 3: All;		
Antenna Type:	☒ External, ☐ Integrated		
Antenna Gain:	Band	Ant1 (dBi)	
	LTE Band 2	1.8	
	LTE Band 4	1.2	
	LTE Band 5	0.3	
	LTE Band 7	1.4	
	LTE Band 12	-0.5	
	LTE Band 13	-0.7	
	LTE Band 14	-0.5	
	LTE Band 17	-0.5	
	LTE Band 25	1.8	
	LTE Band 26	0.3	

All rights reserved. Unless otherwise specified, no part of this report may be reproduced or utilized in any part, form or by any means, electronic or mechanical, including photocopying and microfilm, without permission in writing from TOWE.

	LTE Band 41	1.4
	LTE Band 66	1.5
	LTE Band 71	-0.9
Remark: The above EUT's information was declared by applicant, please refer to the specifications or user manual for more detailed description.		

All rights reserved. Unless otherwise specified, no part of this report may be reproduced or utilized in any part, form or by any means, electronic or mechanical, including photocopying and microfilm, without permission in writing from TOWE.

2 Test Configuration

2.1 Test Channel

Band	Bandwidth	TX Frequency			RX Frequency		
		Range	Channel	Frequency	Range	Channel	Frequency
LTE Band 2	1.4MHz	Low	18607	1850.7 MHz	Low	607	1930.7 MHz
		Middle	18900	1880 MHz	Middle	900	1960 MHz
		High	19193	1909.3 MHz	High	1193	1989.3 MHz
	3MHz	Low	18615	1851.5 MHz	Low	615	1931.5 MHz
		Middle	18900	1880 MHz	Middle	900	1960 MHz
		High	19185	1908.5 MHz	High	1185	1988.5 MHz
	5MHz	Low	18625	1852.5 MHz	Low	625	1932.5 MHz
		Middle	18900	1880 MHz	Middle	900	1960 MHz
		High	19175	1907.5 MHz	High	1175	1987.5 MHz
	10MHz	Low	18650	1855 MHz	Low	650	1935 MHz
		Middle	18900	1880 MHz	Middle	900	1960 MHz
		High	19150	1905 MHz	High	1150	1985 MHz
	15MHz	Low	18675	1857.5 MHz	Low	675	1937.5 MHz
		Middle	18900	1880 MHz	Middle	900	1960 MHz
		High	19125	1902.5 MHz	High	1125	1982.5 MHz
	20MHz	Low	18700	1860 MHz	Low	700	1940 MHz
		Middle	18900	1880 MHz	Middle	900	1960 MHz
		High	19100	1900 MHz	High	1100	1980 MHz
LTE Band 4	1.4MHz	Low	19957	1710.7 MHz	Low	1957	2110.7 MHz
		Middle	20175	1732.5 MHz	Middle	2175	2132.5MHz
		High	20393	1754.3 MHz	High	2393	2154.3 MHz
	3MHz	Low	19965	1711.5 MHz	Low	1965	2111.5 MHz
		Middle	20175	1732.5 MHz	Middle	2175	2132.5MHz
		High	20385	1753.5 MHz	High	2385	2153.5 MHz
	5MHz	Low	19975	1712.5 MHz	Low	1975	2112.5 MHz
		Middle	20175	1732.5 MHz	Middle	2175	2132.5MHz
		High	20375	1752.5 MHz	High	2375	2152.5 MHz
	10MHz	Low	20000	1715 MHz	Low	2115	2115 MHz
		Middle	20175	1732.5 MHz	Middle	2175	2132.5MHz
		High	20350	1750 MHz	High	2350	2150 MHz
	15MHz	Low	20025	1717.5 MHz	Low	2025	2117.5 MHz
		Middle	20175	1732.5 MHz	Middle	2175	2132.5MHz
		High	20325	1747.5 MHz	High	2325	2147.5 MHz
	20MHz	Low	20050	1720 MHz	Low	2050	2120 MHz
		Middle	20175	1732.5 MHz	Middle	2175	2132.5MHz
		High	20300	1745 MHz	High	2300	2145 MHz
LTE Band 5	1.4MHz	Low	20407	824.7 MHz	Low	2407	869.7 MHz
		Middle	20525	836.5 MHz	Middle	2525	881.5 MHz
		High	20643	848.3 MHz	High	2643	893.3 MHz
	3MHz	Low	20415	825.5 MHz	Low	2415	870.5 MHz
		Middle	20525	836.5 MHz	Middle	2525	881.5 MHz
		High	20635	847.5 MHz	High	2635	892.5 MHz
	5MHz	Low	20425	826.5 MHz	Low	2425	871.5 MHz
		Middle	20525	836.5 MHz	Middle	2525	881.5 MHz
		High	20625	846.5 MHz	High	2625	891.5 MHz

All rights reserved. Unless otherwise specified, no part of this report may be reproduced or utilized in any part, form or by any means, electronic or mechanical, including photocopying and microfilm, without permission in writing from TOWE.

Band	Bandwidth	TX Frequency			RX Frequency		
		Range	Channel	Frequency	Range	Channel	Frequency
	10MHz	Low	20450	829 MHz	Low	2450	874 MHz
		Middle	20525	836.5 MHz	Middle	2525	881.5 MHz
		High	20600	844 MHz	High	2600	889 MHz
LTE Band 7	5MHz	Low	20775	2502.5 MHz	Low	2775	2622.5 MHz
		Middle	21100	2535 MHz	Middle	3100	2655 MHz
		High	21425	2567.5 MHz	High	3425	2687.5 MHz
	10MHz	Low	20800	2505 MHz	Low	2800	2625 MHz
		Middle	21100	2535 MHz	Middle	3100	2655 MHz
		High	21400	2565 MHz	High	3400	2685 MHz
	15MHz	Low	20825	2507.5 MHz	Low	2825	2627.5 MHz
		Middle	21100	2535 MHz	Middle	3100	2655 MHz
		High	21375	2562.5 MHz	High	3375	2682.5 MHz
	20MHz	Low	20850	2510 MHz	Low	2850	2630 MHz
		Middle	21100	2535 MHz	Middle	3100	2655 MHz
		High	21350	2560 MHz	High	3350	2680 MHz
LTE Band 12	1.4MHz	Low	23017	699.7 MHz	Low	5017	729.7 MHz
		Middle	23095	707.5 MHz	Middle	5095	737.5 MHz
		High	23173	715.3 MHz	High	5173	745.3 MHz
	3MHz	Low	23025	700.5 MHz	Low	5025	730.5 MHz
		Middle	23095	707.5 MHz	Middle	5095	737.5 MHz
		High	23165	714.5 MHz	High	5165	744.5 MHz
	5MHz	Low	23035	701.5 MHz	Low	5035	731.5 MHz
		Middle	23095	707.5 MHz	Middle	5095	737.5 MHz
		High	23155	713.5 MHz	High	5155	743.5 MHz
	10MHz	Low	23060	704 MHz	Low	5060	734 MHz
		Middle	23095	707.5 MHz	Middle	5095	737.5 MHz
		High	23130	711 MHz	High	5130	741 MHz
LTE Band 13	5MHz	Low	23205	779.5 MHz	Low	5205	748.5 MHz
		Middle	23230	782 MHz	Middle	5230	751 MHz
		High	23255	784.5 MHz	High	5255	753.5 MHz
	10MHz	Low	23230	782 MHz	Low	5230	751 MHz
		Middle	23230	782 MHz	Middle	5230	751 MHz
		High	23230	782 MHz	High	5230	751 MHz
LTE band 14	5MHz	Low	23305	790.5 MHz	Low	5305	760.5 MHz
		Middle	23330	793 MHz	Middle	5330	763 MHz
		High	23355	795.5 MHz	High	5355	765.5 MHz
	10MHz	Low	23330	793 MHz	Low	5330	763 MHz
		Middle	23330	793 MHz	Middle	5330	763 MHz
		High	23330	793 MHz	High	5330	763 MHz
LTE band 17	5MHz	Low	23755	706.5 MHz	Low	5755	736.5 MHz
		Middle	23790	710 MHz	Middle	5790	740 MHz
		High	23825	713.5 MHz	High	5825	743.5 MHz
	10MHz	Low	23780	709 MHz	Low	5780	739 MHz
		Middle	23790	710 MHz	Middle	5790	740 MHz
		High	23800	711 MHz	High	5800	741 MHz
LTE Band 25	1.4MHz	Low	26047	1850.7 MHz	Low	8047	1930.7 MHz
		Middle	26365	1882.5 MHz	Middle	8365	1962.5 MHz
		High	26683	1914.3 MHz	High	8683	1994.3 MHz

All rights reserved. Unless otherwise specified, no part of this report may be reproduced or utilized in any part, form or by any means, electronic or mechanical, including photocopying and microfilm, without permission in writing from TOWE.

Band	Bandwidth	TX Frequency			RX Frequency		
		Range	Channel	Frequency	Range	Channel	Frequency
	3MHz	Low	26055	1851.5 MHz	Low	8055	1931.5 MHz
		Middle	26365	1882.5 MHz	Middle	8365	1962.5 MHz
		High	26675	1913.5 MHz	High	8675	1993.5 MHz
	5MHz	Low	26065	1852.5 MHz	Low	8065	1932.5 MHz
		Middle	26365	1882.5 MHz	Middle	8365	1962.5 MHz
		High	26665	1912.5 MHz	High	8665	1992.5 MHz
	10MHz	Low	26090	1855 MHz	Low	8090	1935 MHz
		Middle	26365	1882.5 MHz	Middle	8365	1962.5 MHz
		High	26640	1910 MHz	High	8640	1990 MHz
	15MHz	Low	26115	1857.5 MHz	Low	8115	1937.5 MHz
		Middle	26365	1882.5 MH	Middle	8365	1962.5 MHz
		High	26615	1907.5 MHz	High	8615	1987.5 MHz
	20MHz	Low	26140	1860 MHz	Low	8140	1940 MHz
		Middle	26365	1882.5 MHz	Middle	8365	1962.5 MHz
		High	26590	1905 MHz	High	8590	1985 MHz
LTE Band 26 (814-824)	1.4MHz	Low	26697	814.7 MHz	Low	8697	859.7 MHz
		Middle	26740	819 MHz	Middle	8740	864MHz
		High	26783	823.3 MHz	High	8783	868.3 MHz
	3MHz	Low	26705	815.5 MHz	Low	8705	860.5 MHz
		Middle	26740	819 MHz	Middle	8740	864MHz
		High	26775	822.5 MHz	High	8775	867.5 MHz
	5MHz	Low	26715	816.5 MHz	Low	8715	861.5 MHz
		Middle	26740	819 MHz	Middle	8740	864MHz
		High	26765	821.5 MHz	High	8765	866.5 MHz
	10MHz	Low	26740	819 MHz	Low	8740	864MHz
		Middle	26740	819 MHz	Middle	8740	864MHz
		High	26740	819 MHz	High	8740	864MHz
LTE Band 26 (824-849)	1.4MHz	Low	26797	824.7 MHz	Low	8797	869.7 MHz
		Middle	26915	836.5 MHz	Middle	8915	881.5 MHz
		High	27033	848.3 MHz	High	9033	893.3 MHz
	3MHz	Low	26805	825.5 MHz	Low	8805	870.5 MHz
		Middle	26915	836.5 MHz	Middle	8915	881.5 MHz
		High	27025	847.5 MHz	High	9025	892.5 MHz
	5MHz	Low	26815	826.5 MHz	Low	8815	871.5 MHz
		Middle	26915	836.5 MHz	Middle	8915	881.5 MHz
		High	27015	846.5 MHz	High	9015	891.5 MHz
	10MHz	Low	26840	829 MHz	Low	8840	844 MHz
		Middle	26915	836.5 MHz	Middle	8915	881.5 MHz
		High	26990	844 MHz	High	8990	889 MHz
	15MHz	Low	26865	831.5 MHz	Low	8865	876.5 MHz
		Middle	26915	836.5 MHz	Middle	8915	881.5 MHz
		High	26965	841.5 MHz	High	8965	886.5 MHz
LTE Band 41 (2496-2690)	5MHz	Low	39675	2498.5 MHz	Low	39675	2498.5 MHz
		Middle	40620	2593 MHz	Middle	40620	2593 MHz
		High	41565	2687.5 MHz	High	41565	2687.5 MHz
	10MHz	Low	39700	2501 MHz	Low	39700	2501 MHz
		Middle	40620	2593 MHz	Middle	40620	2593 MHz
		High	41540	2685 MHz	High	41540	2685 MHz

All rights reserved. Unless otherwise specified, no part of this report may be reproduced or utilized in any part, form or by any means, electronic or mechanical, including photocopying and microfilm, without permission in writing from TOWE.

Band	Bandwidth	TX Frequency			RX Frequency		
		Range	Channel	Frequency	Range	Channel	Frequency
	15MHz	Low	39725	2503.5 MHz	Low	39725	2503.5 MHz
		Middle	40620	2593 MHz	Middle	40620	2593 MHz
		High	41515	2682.5 MHz	High	41515	2682.5 MHz
	20MHz	Low	39750	2506 MHz	Low	39750	2506 MHz
		Middle	40620	2593 MHz	Middle	40620	2593 MHz
		High	41490	2680 MHz	High	41490	2680 MHz
LTE Band 66	1.4MHz	Low	131979	1710.7 MHz	Low	66443	2110.7 MHz
		Middle	132322	1745 MHz	Middle	66786	2145MHz
		High	132665	1779.3 MHz	High	67329	2199.3 MHz
	3MHz	Low	131987	1711.5 MHz	Low	66451	2111.5 MHz
		Middle	132322	1745 MHz	Middle	66786	2145MHz
		High	132657	1778.5MHz	High	67321	2198.5MHz
	5MHz	Low	131997	1712.5 MHz	Low	66461	2112.5 MHz
		Middle	132322	1745 MHz	Middle	66786	2145MHz
		High	132647	1777.5 MHz	High	67311	2197.5 MHz
	10MHz	Low	132022	1715 MHz	Low	66486	2115 MHz
		Middle	132322	1745 MHz	Middle	66786	2145MHz
		High	132622	1775 MHz	High	67286	2195 MHz
	15MHz	Low	132047	1717.5 MHz	Low	66511	2117.5 MHz
		Middle	132322	1745 MHz	Middle	66786	2145MHz
		High	132597	1772.5 MHz	High	67261	2192.5 MHz
	20MHz	Low	132072	1720 MHz	Low	66536	2120 MHz
		Middle	132322	1745 MHz	Middle	66786	2145MHz
		High	132572	1770 MHz	High	67236	2190 MHz
LTE Band 71	5MHz	Low	133147	665.5 MHz	Low	68611	619.5 MHz
		Middle	133297	680.5 MHz	Middle	68761	634.5 MHz
		High	133447	695.5 MHz	High	68911	649.5 MHz
	10MHz	Low	133172	668 MHz	Low	68636	622 MHz
		Middle	133297	680.5 MHz	Middle	68761	634.5 MHz
		High	133422	693 MHz	High	68886	647 MHz
	15MHz	Low	133197	670.5 MHz	Low	68661	624.5 MHz
		Middle	133297	680.5 MHz	Middle	68761	634.5 MHz
		High	133397	690.5 MHz	High	68861	644.5 MHz
	20MHz	Low	133222	673 MHz	Low	68686	627 MHz
		Middle	133297	680.5 MHz	Middle	68761	634.5 MHz
		High	133372	688 MHz	High	68836	642 MHz

All rights reserved. Unless otherwise specified, no part of this report may be reproduced or utilized in any part, form or by any means, electronic or mechanical, including photocopying and microfilm, without permission in writing from TOWE.

2.2 Test Mode

Test Mode	Description
TM 1	EUT communication with simulated station in LTE/QPSK mode
TM 2	EUT communication with simulated station in LTE/16QAM mode

2.3 Support Unit used in test

Description	Manufacturer	Model	Serial Number
Development Board	NETPRISMA INC.	SMART-EVB-G5	/
Development Board	NETPRISMA INC.	SUS600-LD-TE-A	/
Remark: all above the information of table are provided by client.			

2.4 Test Environment

Temperature:	Normal: 15℃ ~ 35℃, Extreme: -30℃ ~ +50℃
Relative Humidity	45-56 % RH Ambient
Voltage:	Nominal: 3.8 Vdc, Extreme: Low 3.55 Vdc, High 4.4 Vdc

2.5 Test RF Cable

For all conducted test items: The offset level is set spectrum analyzer to compensate the RF cable loss and attenuator factor between RF conducted output port and spectrum analyzer. With the offset compensation, the spectrum analyzer reading level will be exactly the RF output level.
The spectrum analyzer offset is derived from RF cable loss and attenuator factor.
Offset = RF cable loss + attenuator factor.

2.6 Modifications

No modifications were made during testing.

All rights reserved. Unless otherwise specified, no part of this report may be reproduced or utilized in any part, form or by any means, electronic or mechanical, including photocopying and microfilm, without permission in writing from TOWE.

2.7 Test Setup Diagram

2.7.1 Conducted Configuration

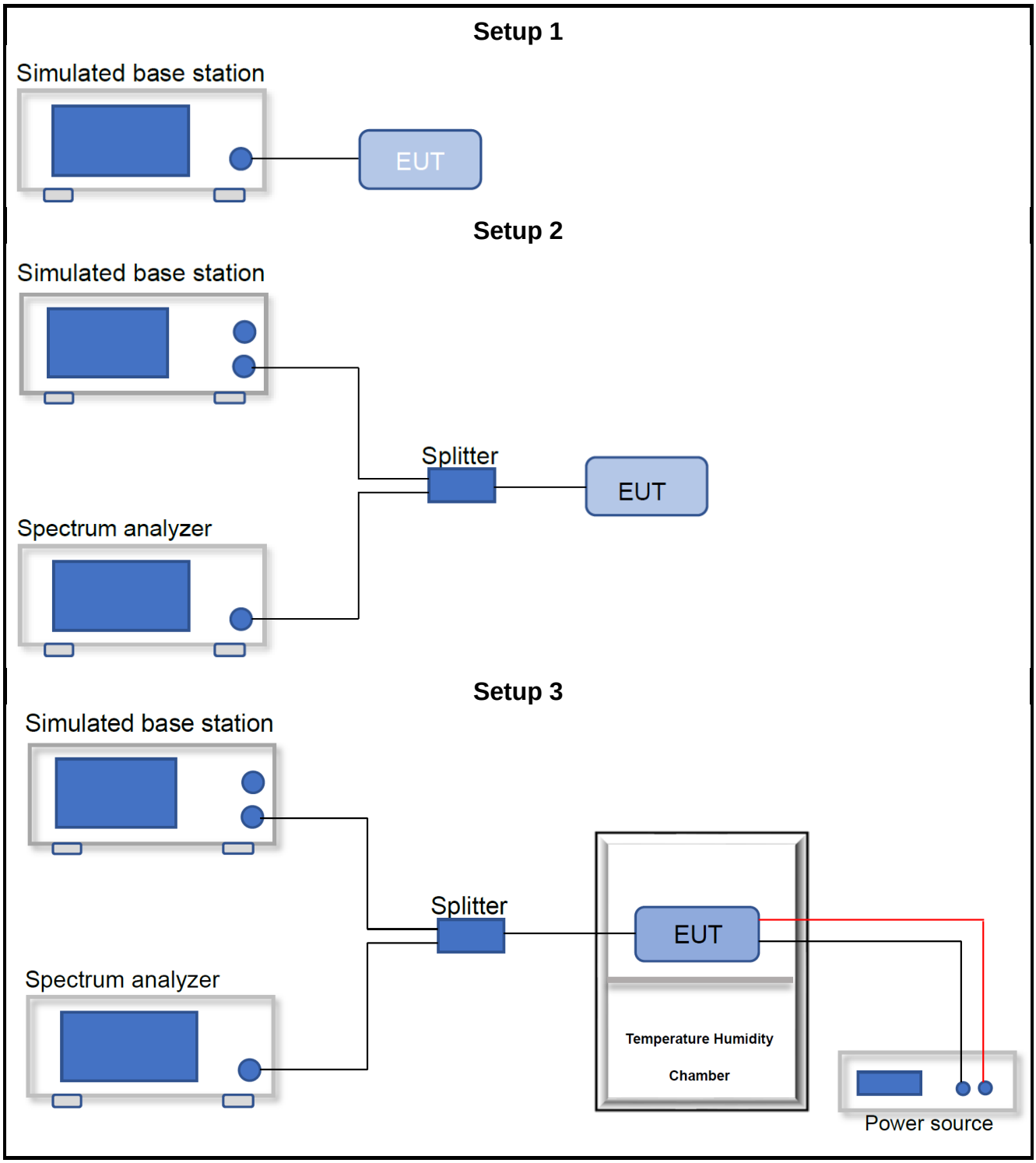

All rights reserved. Unless otherwise specified, no part of this report may be reproduced or utilized in any part, form or by any means, electronic or mechanical, including photocopying and microfilm, without permission in writing from TOWE.

2.7.2 Radiated Configuration

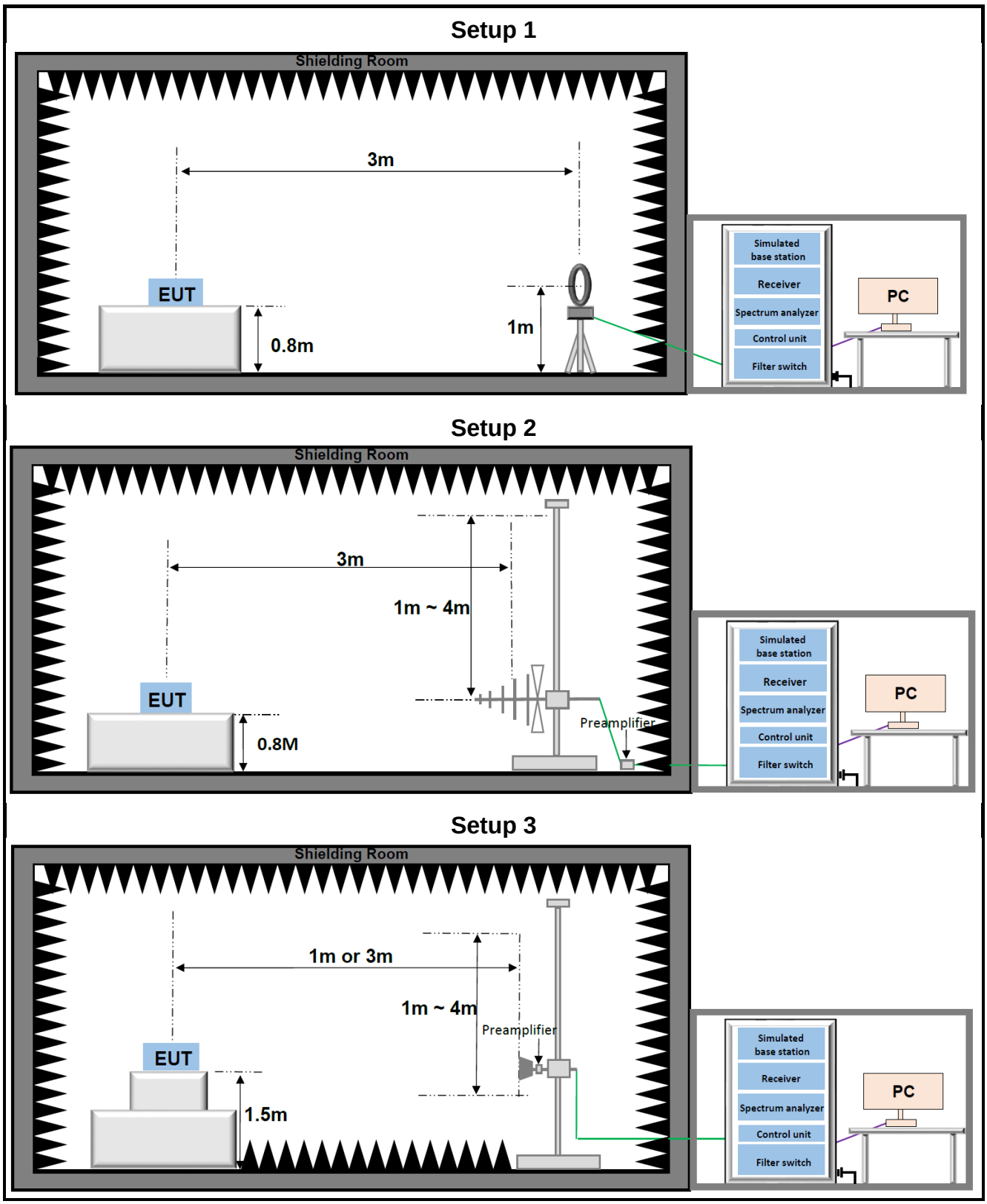

All rights reserved. Unless otherwise specified, no part of this report may be reproduced or utilized in any part, form or by any means, electronic or mechanical, including photocopying and microfilm, without permission in writing from TOWE.

3 Equipment and Measurement Uncertainty

All test and measuring equipment utilized to perform the tests documented in this report are calibrated on a regular basis, whichever is less, and where applicable is traceable recognized national standards.

3.1 Test Equipment List

RF 04					
Description	**Manufacturer**	**Model**	**S.N.**	**Last Due**	**Cal Due**
Radio Communication Analyzer	Anritsu	MT8821C	6262170436	2024/03/25	2025/03/24
				2025/03/14	2026/03/13
Signal Analyzer	Keysight	N9020A	US46220152	2024/03/25	2025/03/24
				2025/03/14	2026/03/13
Signal Generator	Keysight	N5182A	MY49060761	2024/03/25	2025/03/24
				2025/03/11	2026/03/10
Signal Generator	R&S	SMR20	101691	2024/03/25	2025/03/24
				2025/03/11	2026/03/10
Hygrometer	BingYu	HTC-1	N/A	2023/06/01	2024/05/31
Band Reject Filter Group	Tonscend	JS0806-F	23B806F0662	N/A	N/A
RF Control Unit	Tonscend	JS0806-1	22L8060650	N/A	N/A
Measurement Software	Tonscend	TS1120 V3.1.46	10636	N/A	N/A

Radiated Emission					
Description	**Manufacturer**	**Model**	**S.N.**	**Last Due**	**Cal Due**
Biconic Logarithmic Periodic Antennas	Schwarzbeck	VULB9163	1643	2023/06/25	2025/06/24
Double-Ridged Horn Antennas	Schwarzbeck	BBHA 9120D	2809	2023/06/25	2025/06/24
Broad-Band Horn Antenna	Schwarzbeck	BBHA 9170	1290	2023/06/25	2025/06/24
Loop Antenna	Schwarzbeck	FMZB 1519C	1519C-028	2023/06/29	2025/06/28
Signal Analyzer	Keysight	N9020A	MY49100252	2024/03/25	2025/03/24
				2025/03/11	2026/03/10
EXA Signal Analyzer, Multi-touch	Keysight	N9010B	MY63440541	2024/05/30	2025/05/29
Wideband Radio Communication Tester	R&S	CMW500	150645	2024/03/25	2025/03/24
				2025/03/11	2026/03/10
Low Noise Amplifier	Tonscend	TAP9K3G40	AP23A8060273	2023/04/08	2025/04/07
				2025/03/11	2027/03/10
Low Noise Amplifier	Tonscend	TAP01018050	AP22G806258	2023/04/08	2025/04/07
				2025/03/11	2027/03/10
Low Noise Amplifier	Tonscend	TAP18040048	AP22G806247	2023/04/08	2025/04/07
				2025/03/11	2027/03/10
Hygrometer	BINGYU	HTC-1	N/A	2023/06/01	2025/05/31
Test Software	Tonscend	TS+	Version: 5.0.0	N/A	N/A

All rights reserved. Unless otherwise specified, no part of this report may be reproduced or utilized in any part, form or by any means, electronic or mechanical, including photocopying and microfilm, without permission in writing from TOWE.

3.2 Measurement Uncertainty

Parameter	U_{lab}
Frequency error	50.30Hz
Output Power	0.76dB
Conducted spurious emissions	2.22dB
Radiated Emissions(9kHz~30MHz)	2.40dB
Radiated Emissions(30MHz~1000MHz)	4.66dB
Radiated Emissions(1GHz~18GHz)	5.42dB
Radiated Emissions(18GHz~40GHz)	5.46dB

Uncertainty figures are valid to a confidence level of 95%

All rights reserved. Unless otherwise specified, no part of this report may be reproduced or utilized in any part, form or by any means, electronic or mechanical, including photocopying and microfilm, without permission in writing from TOWE.

4 Test Results

4.1 Output Power (ERP / EIRP / Conducted Power)

Limits

FCC Part	Test Band	Limit
§22.913(a)(5)	LTE Band 5/26(824 ~ 849MHz)	The ERP of mobile transmitters and auxiliary test transmitters must not exceed 7watts.
§24.232(c)	LTE Band 2/25	Mobile and portable stations are limited to 2 watts EIRP and the equipment must employ a means for limiting power to the minimum necessary for successful communications.
§27.50(h)(2)	LTE Band 7/41	Mobile and other user stations. Mobile stations are limited to 2.0 watts EIRP. All user stations are limited to 2.0 watts transmitter output power
§27.50(d)(4)	LTE Band 4/66	Fixed, mobile, and portable (hand-held) stations operating in the 1710-1755MHz band and mobile and portable stations operating in the 1695-1710 MHz and 1755-1780MHz bands are limited to 1watt EIRP. Fixed stations operating in the 1710-1755MHz band are limited to a maximum antenna height of 10 meters above ground. Mobile and portable stations operating in these bands must employ a means for limiting power to the minimum necessary for successful communications.
§27.50(c)(10)	LTE Band 12/17/71	Portable stations (hand-held devices) in the 600 MHz uplink band and the 698-746 MHz band, and fixed and mobile stations in the 600 MHz uplink band are limited to 3watts ERP.
§27.50(b)(9)	LTE Band 13	Control stations and mobile stations transmitting in the 746–757 MHz, 776–788 MHz, and 805–806 MHz bands and fixed stations transmitting in the 787–788 MHz and 805–806 MHz bands are limited to 30 watts ERP.
§90.542(a)	LTE Band 14	Portable stations (hand-held devices) transmitting in the 758-768 MHz band and the 788-798 MHz band are limited to 3 watts ERP.
§90.635(b)	LTE Band 26(814~824MHz)	The maximum output power of the transmitter for mobile stations is 100 watts (20dBw).

Test Procedure

KDB 971168 D01 V03r01 Section 5.2.1, for Conducted Output Power

KDB 971168 D01 V03r01 Section 5.2, for Effective (Isotropic) Radiated Power

Test Settings

Conducted Output Power:

The transmitter output was connected to a calibrated attenuator, the other end of which was connected to the simulated base station. The simulated station was set to force the EUT to its maximum power setting, Transmitter output power was read off in dBm, read values have added cable loss and attenuation.

Radiated Power:

The formula for calculating ERP/EIRP based on conduction power is as follows:
EIRP (dBm) = Conducted Power (dBm) + antenna gain (dBi)
ERP=EIRP - 2.15dB

All rights reserved. Unless otherwise specified, no part of this report may be reproduced or utilized in any part, form or by any means, electronic or mechanical, including photocopying and microfilm, without permission in writing from TOWE.

Test Setup

Refer to section 2.7.1 Setup 1

Measuring Instruments

The measuring equipment is listed in the section 3.1 of this test report.

Test Results

The detailed test data see: **Appendix.**

All rights reserved. Unless otherwise specified, no part of this report may be reproduced or utilized in any part, form or by any means, electronic or mechanical, including photocopying and microfilm, without permission in writing from TOWE.

4.2 Peak-Average Ratio

Limits

§22.913(d): The peak-to-average ratio (PAR) of the transmission must not exceed 13 dB.

§24.232(d): The peak-to-average ratio (PAR) of the transmission may not exceed 13 dB.

§27.50(d)(5): The peak-to-average ratio (PAR) of the transmission may not exceed 13 dB.

Test Procedure

KDB 971168 D01 V03r01 Section 5.7.1

Test Settings

The following guidelines are offered for performing a CCDF measurement.

1. Set resolution/measurement bandwidth ≥ OBW or specified reference bandwidth.
2. Set the number of counts to a value that stabilizes the measured CCDF curve.
3. Set the measurement interval as follows:
   a) For continuous transmissions, set to the greater of [10 × (number of points in sweep) × (transmission symbol period)] or 1 ms.
   b) For burst transmissions, employ an external trigger that is synchronized with the EUT burst timing sequence, or use the internal burst trigger with a trigger level that allows the burst to stabilize. Set the measurement interval to a time that is less than or equal to the burst duration.
   c) If there are several carriers in a single antenna port, the peak power shall be determined for each individual carrier (by disabling the other carriers while measuring the required carrier) and the total peak power calculated from the sum of the individual carrier peak powers.
4. Record the maximum PAPR level associated with a probability of 0.1%.
5. The peak power level is calculated form the sum of the PAPR value from step d) to the measured average power.

Test Setup

Refer to section 2.7.1 Setup 2

Measuring Instruments

The measuring equipment is listed in the section 3.1 of this test report.

Test Result

The detailed test data see: **Appendix.**

All rights reserved. Unless otherwise specified, no part of this report may be reproduced or utilized in any part, form or by any means, electronic or mechanical, including photocopying and microfilm, without permission in writing from TOWE.

4.3 Occupied Bandwidth

Limits

For Reporting Purposes only

Test Procedure

KDB 971168 D01 V03r01 Section 4.2 & 4.3

Test Settings

1. The transmitter output was connected to a calibrated coaxial cable and coupler, The other end is connected to the spectrum analyzer and simulated station.
2. The signal analyzer automatic bandwidth measurement capability was used to perform the 99% occupied bandwidth and the 26dB bandwidth. The bandwidth measurement was not influenced by ant intermediate power nulls in the fundamental emission.
3. The simulated base station was set to force the EUT to its maximum transmitting power.
4. RBW = 1 - 5% of the expected OBW
5. VBW ≥ 3 times the RBW
6. Sweep = Auto
7. Detector = Peak
8. Trace = Max hold
9. The trace was allowed to stabilize

Test Setup

Refer to section 2.7.1 Setup 2

Measuring Instruments

The measuring equipment is listed in the section 3.1 of this test report.

Test Result

The detailed test data see: **Appendix.**

All rights reserved. Unless otherwise specified, no part of this report may be reproduced or utilized in any part, form or by any means, electronic or mechanical, including photocopying and microfilm, without permission in writing from TOWE.

4.4 Band Edge and Emission Mask

Limits

FCC part	Test Band	Limit
§22.917(a) §24.238(a) §27.53(c) §27.53(g) §27.53(h)	LTE Band 5/26(824 ~ 849MHz) LTE Band 2/25 LTE Band 13 LTE Band 12/17/71 LTE Band 4/66	The power of any emission outside of the authorized operating frequency ranges must be attenuated below the transmitting power (P) by a factor of at least 43 + 10 log(P) dB.
§27.53(m)	LTE Band 7/41	For mobile digital stations, the attenuation factor shall be not less than 40 + 10 log (P) dB on all frequencies between the channel edge and 5 MHz from the channel edge, 43 + 10 log (P) dB on all frequencies between 5 MHz and X MHz from the channel edge, and 55 + 10 log (P) dB on all frequencies more than X MHz from the channel edge, where X is the greater of 6 MHz or the actual emission bandwidth as defined in paragraph (m)(6) of this section. In addition, the attenuation factor shall not be less that 43 + 10 log (P) dB on all frequencies between 2490.5 MHz and 2496 MHz and 55 + 10 log (P) dB at or below 2490.5 MHz.
§90.210(b) §90.691(a)	LTE Band 14 LTE Band 26(814 ~ 824MHz)	On all frequencies between 769-775 MHz and 799-805 MHz, by a factor not less than 65 + 10 log (P) dB in a 6.25 kHz band segment, for mobile and portable stations. On any frequency between 775-788 MHz, above 805 MHz, and below 758 MHz, by at least 43 + 10 log (P) dB. in the 100 kHz bands immediately outside and adjacent to the frequency block, a resolution bandwidth of 30 kHz be employed.

Test Procedure

KDB 971168 D01 V03r01 Section 6.0

Test Settings

1. The transmitter output was connected to a calibrated coaxial cable and coupler, The other end is connected to the spectrum analyzer and simulated station.
2. The simulated base station was set to force the EUT to its maximum transmitting power.
3. Start and stop frequency were set such that the band edge would be placed in the center of the plot.
4. RBW ≥ 1% of the emission bandwidth
5. VBW ≥ 3 times the RBW
6. Detector = RMS
7. Number of sweep point ≥ 2 times Span/RBW
8. Sweep = Auto
9. Trace = Max hold
10. The trace was allowed to stabilize

All rights reserved. Unless otherwise specified, no part of this report may be reproduced or utilized in any part, form or by any means, electronic or mechanical, including photocopying and microfilm, without permission in writing from TOWE.

Test Setup

Refer to section 2.7.1. Setup 2

Measuring Instruments

The measuring equipment is listed in the section 3.1 of this test report.

Test Result

The detailed test data see: **Appendix.**

All rights reserved. Unless otherwise specified, no part of this report may be reproduced or utilized in any part, form or by any means, electronic or mechanical, including photocopying and microfilm, without permission in writing from TOWE.

4.5 Spurious Emission at Antenna Terminals

Limits

FCC part	Test Band	Limit
§22.917(a) §24.238(a) §27.53(c) §27.53(g) §27.53(h) §90.543(c)(f)	LTE Band 5/26(824 ~ 849MHz) LTE Band 2/25 LTE Band 13 LTE Band 12/17/71 LTE Band 4/66 LTE Band 14	The power of any emission outside of the authorized operating frequency ranges must be attenuated below the transmitting power (P) by a factor of at least 43 + 10 log(P) dB.
§27.53(m)	LTE Band 7/41	All frequencies between 2490.5 MHz and 2496 MHz and 55 + 10 log (P) dB at or below 2490.5 MHz.
§90.691	LTE Band 26(814~824MHz)	The power of any emission shall be attenuated below the transmitter power (P) in watts by at least 43 + 10Log (P) decibels or 80 decibels, whichever is the lesser attenuation.

Test Procedure

KDB 971168 D01 V03r01 Section 6.0

Test Settings

1. The transmitter output was connected to a calibrated coaxial cable and coupler, The other end is connected to the spectrum analyzer and simulated station.
2. The simulated base station was set to force the EUT to its maximum transmitting power.
3. Start frequency was set to 9kHz and stop frequency was set to 10th harmonic.
4. RBW and VBW (see test notes)
5. Detector = RMS
6. Sweep = Auto
7. Sweep point = below 30MHz(1001pts); 30MHz – 1GHz(2001pts); above 1GHz(40001pts)
8. Trace = trace average for continuous emissions, max hold for pulse emissions
9. Allow trace to fully stabilize

Test Notes

1. Compliance with the applicable limits is based on the use of measurement instrumentation employing a resolution bandwidth 100kHz or greater for measurements below 1GHz. However, in the 1MHz bands immediately outside and adjacent to the frequency block a resolution bandwidth of at least one percent of the emission bandwidth of the fundamental emission of the transmitter may be employed. The emission bandwidth is defined as the width of the signal between two points, one below the carrier center frequency and one above the carrier center frequency, outside of which all emission is attenuated at least 26dB below the transmitter power
2. 9kHz – 150kHz: RBW=1kHz, VBW≥3 times the RBW
3. 150kHz – 30MHz: RBW=10kHz, VBW≥3 times the RBW

Test Setup

Refer to section 2.7.1. Setup 2

Measuring Instruments

The measuring equipment is listed in the section 3.1 of this test report.

Test Result

The detailed test data see: **Appendix.**

All rights reserved. Unless otherwise specified, no part of this report may be reproduced or utilized in any part, form or by any means, electronic or mechanical, including photocopying and microfilm, without permission in writing from TOWE.

4.6 Field Strength of Spurious Radiation

Limits

FCC part	Test Band	Limit
§2.1053 §22.917(a) §24.238(a) §27.53(g) §27.53(h)	LTE Band 5/26(824 ~ 849MHz) LTE Band 2/25 LTE Band 12/17/71 LTE Band 4/66	The power of any emission outside of the authorized operating frequency ranges must be attenuated below the transmitting power (P) by a factor of at least 43 + 10 log(P) dB.
§27.53(c)(f)	LTE Band 13	On any frequency outside the 776-788 MHz band, the power of any emission shall be attenuated outside the band below the transmitter power (P) by at least 43 + 10 log (P) dB; For operations in the 746-758 MHz, 775-788 MHz, and 805-806 MHz bands, emissions in the band 1559-1610 MHz shall be limited to −70 dBW/MHz equivalent isotropically radiated power (EIRP) for wideband signals, and −80 dBW EIRP for discrete emissions of less than 700 Hz bandwidth. For the purpose of equipment authorization, a transmitter shall be tested with an antenna that is representative of the type that will be used with the equipment in normal operation.
§90.543(e)(f)	LTE Band 14	least 43 + 10 log (P) dB. For operations in the 758-775 MHz and 788-805 MHz bands, all emissions including harmonics in the band 1559-1610 MHz shall be limited to −70 dBW/MHz equivalent isotopically radiated power (EIRP) for wideband signals.
§27.53(m)	LTE Band 7/41	All frequencies between 2490.5 MHz and 2496 MHz and 55 + 10 log (P) dB at or below 2490.5 MHz.
§90.691	LTE Band 26(814~824MHz)	The power of any emission shall be attenuated below the transmitter power (P) in watts by at least 43 + 10Log (P) decibels or 80 decibels, whichever is the lesser attenuation.

Test Procedure

KDB 971168 D01 V03r01 Section 7

Test Settings

1. For radiated emissions measurements performed at frequencies less than or equal to 1GHz, the EUT shall be placed on a RF-transparent table or support at a nominal height of 80cm above the reference ground plane.
2. For radiated emissions measurements performed at frequencies above 1GHz, the EUT shall be placed on a RF-transparent table or support at a nominal height of 150cm above the ground plane.
3. Radiated measurements shall be made with the measurement antenna positioned in both horizontal and vertical polarization. The measurement antenna shall be varied from 1m to 4m in height above the reference ground in a search for the relative positioning that produces the maximum radiated signal level (i.e, field strength or received power), when orienting the measurement antenna in vertical polarization, the minimum height of the lowest element of the antenna shall clear the site reference ground plane by at least 25cm.
4. For each suspected emission, the EUT was ranged its worst case and then tune the antenna tower(from 1~4m) and turntable(from 0~360°) find the maximum reading. Preamplifier and a high pass filter are used for the test in order get better signal level comply with the guidelines.
5. The simulated base station was set to force the EUT to its maximum transmitting power.
6. spectrum analyzer setting:

All rights reserved. Unless otherwise specified, no part of this report may be reproduced or utilized in any part, form or by any means, electronic or mechanical, including photocopying and microfilm, without permission in writing from TOWE.

Measurements 9kHz ~150kHz: RBW = 300Hz; VBW ≥ 3kHz; Detector = RMS
Measurements 150kHz ~30MHz: RBW = 10kHz; VBW ≥ 30kHz; Detector = RMS
Measurements 30MHz~1000MHz: RBW = 100kHz or 1MHz; VBW ≥ 1MHz or 3MHz; Detector = RMS
Measurements Above 1000MHz: RBW = 1 MHz; VBW ≥ 3 MHz; Detector = RMS

7. The field strength is calculated by adding the Antenna Factor, Cable Factor. The basic equation with a sample calculation is as follows:

   E(dBμV/m) = Measured amplitude level (dBμV) + Cable Loss (dB) + Antenna Factor (dB/m).

   E(dBμV/m) = Measured amplitude level (dBm) + 107 + Cable Loss (dB) + Antenna Factor (dB/m).

   E(dBuV/m) = EIRP(dBm) - 20log(D) + 104.8; where D is the measurement distance(in the far field region) in m.

   EIRP(dBm) = E(dBμV/m) + 20log(D) - 104.8; where D is the measurement distance(in the far field region) in m.

   *So, from d: The measuring distance is usually at 3m, then 20*Log(3)=9.5424*

   Then, EIRP (dBm)= E (dBμV/m) +9.5424-104.8=E (dBμV/m)-95.2576
8. Repeat above procedures until all frequencies measured was complete.
9. Measure and record the results in the test report.

Test notes

1. The EUT was tested in three orthogonal planes and in all possible test configurations and positioning. The worst-case emissions are reported with the EUT positioning, modulations, RB sizes and offsets, and channel bandwidth configurations shown in the tables below.
2. Emissions below 18GHz were measured at a 3-meter test distance while emissions above 18GHz were measured at a 1-meter test distance with the application of a distance correction factor.
3. Radiated spurious emissions were investigated from 9kHz to 30MHz, 30MHz-1GHz and above 1GHz. the disturbance between 9kHz to 30MHz, 30MHz-1GHz and 18GHz to 40GHz was very low. The amplitude of spurious emissions from the radiator which are attenuated more than 20dB below the limit need not be recorded, so only the harmonics had been displayed.
4. The "-" shown in the following RSE tables are used to denote a noise floor measurement.

Test Setup

Refer to section 2.7.2 for details.

Measuring Instruments

The measuring equipment is listed in the section 3.1 of this test report.

Test Result

The detailed test data see: **Appendix.**

All rights reserved. Unless otherwise specified, no part of this report may be reproduced or utilized in any part, form or by any means, electronic or mechanical, including photocopying and microfilm, without permission in writing from TOWE.

4.7 Frequency Stability V.S. Temperature, Voltage

Limits

§22.355:

The carrier frequency shall not depart from the reference frequency in excess of ±2.5 ppm for mobile stations.

§24.235 / §27.54 / §90.213:

The frequency stability shall be sufficient to ensure that the fundamental emission stays within the authorized frequency block.

Test Procedure

KDB 971168 D01 V03r01 Section 9

Test Settings

1. The carrier frequency of the transmitter is measured at room temperature (20°C to provide a reference).
2. The equipment is turned on in a "standby" condition for fifteen minutes before applying power to the transmitter. Measurement of the carrier frequency of the transmitter is made within one minute after applying power to the transmitter.
3. Frequency measurements are made at 10°C intervals ranging from -30°C to +50°C. A period of at least one half-hour is provided to allow stabilization of the equipment at each temperature level.

Test Notes

a.) Temperature:
The temperature is varied from -30°C to +50°C in 10°C increments using an environmental chamber.

b.) Primary Supply Voltage:
The primary supply voltage is varied from 85% to 115% of the nominal value for non-hand-carried battery and AC powered equipment. For hand-carried, battery-powered equipment, primary supply voltage is reduced to the battery operating end point which shall be specified by the manufacturer.

Test Setup

Refer to section 2.7.1 Setup 3

Measuring Instruments

The measuring equipment is listed in the section 3.1 of this test report.

Test Result

The detailed test data see: **Appendix.**

All rights reserved. Unless otherwise specified, no part of this report may be reproduced or utilized in any part, form or by any means, electronic or mechanical, including photocopying and microfilm, without permission in writing from TOWE.

5 Test Setup Photos

The detailed test data see: **Appendix-C WWAN Setup Photos**

All rights reserved. Unless otherwise specified, no part of this report may be reproduced or utilized in any part, form or by any means, electronic or mechanical, including photocopying and microfilm, without permission in writing from TOWE.

Appendix

Appendix List:

Appendix-A LTE Band 2
Appendix-A LTE Band 4
Appendix-A LTE Band 5
Appendix-A LTE Band 7
Appendix-A LTE Band 12
Appendix-A LTE Band 13
Appendix-A LTE Band 14
Appendix-A LTE Band 17
Appendix-A LTE Band 25
Appendix-A LTE Band 26(814-824)
Appendix-A LTE Band 26(824-849)
Appendix-A LTE Band 41
Appendix-A LTE Band 66
Appendix-A LTE Band 71
Appendix-B Field Strength of Spurious Radiation

~The End~

All rights reserved. Unless otherwise specified, no part of this report may be reproduced or utilized in any part, form or by any means, electronic or mechanical, including photocopying and microfilm, without permission in writing from TOWE.