RF Test Report

Applicant:	NETPRISMA INC.
Address:	1301 6TH AVE, SEATTLE, WA, 98101-2304, UNITED STATES
Product:	Multi-mode Smart LTE Module with Wi-Fi & Bluetooth
Model No.:	SUV200-LD
Brand Name:	Vrileg
FCC ID:	2BEY3SUV200LDA
Standards:	FCC CFR47 Part 15E
Report No.:	PD20250034-R3F
Issue Date:	2025/04/21
Test Result:	PASS *

* **Testing performed at Hefei Panwin Technology Co., Ltd. on the above equipment indicates the product meets the requirements of the relevant standards.**

Reviewed By: Jerry Zhang **Approved By:** Alec Yang

Hefei Panwin Technology Co., Ltd.

Floor 1, Zone E, Plant 2#, Mingzhu Industrial Park, No.106 Chuangxin Avenue, High-tech Zone, Hefei City, Anhui Province,China

TEL: +86-0551-63811775

Revision History

Report No.	Version	Description	Issue Date	Note
PD20250034-R3F	01	Initial Report	2025/04/21	Valid

CONTENTS

1 Test Laboratory 5
1.1 Notes of the Test Report 5
1.2 Test Facility 5
1.3 Testing Laboratory 5
2 General Description of Equipment under Test 6
2.1 Details of Application 6
2.2 Details of EUT 6
2.3 Application Standards 7
3 Test Condition 8
3.1 DFS Detection Thresholds 8
3.2 Radar Test Waveforms 9
3.3 Test setups 11
3.4 Equipment List 12
3.5 Support Equipment List 12
4 Test Items Description 13
4.1. DFS Detection Thresholds 13
4.2 U-NII Detection Bandwidth 14
4.3 Channel Availability Check Time 16
4.4 Channel Move Time, Channel Closing Transmission Time and Non-Occupancy Period 18
4.5 Statistical Performance Check 20
ANNEX A: Test Results of Conducted Test 22
ANNEX B: The EUT Appearance 26
ANNEX C: Test Setup Photograph 27

Test Summary

No.	Test Case	Clause in FCC rules	Verdict
1	DFS Detection Threshold	15.407/KDB 905462 5.2	PASS
2	U-NII Detection Bandwidth	15.407/KDB 905462 7.8.1	NA
3	Channel Availability Check Time	15.407/KDB 905462 7.8.2	NA
4	Channel Move Time	15.407/KDB 905462 7.8.3	PASS
5	Channel Closing Transmission Time	15.407/KDB 905462 7.8.3	PASS
6	Non-Occupancy Period(NOP)	15.407/KDB 905462 7.8.3	PASS
7	Statistical Performance Check	15.407/KDB 905462 7.8.4	NA

Date of Testing: 2025/03/06 to 2025/04/21
Date of Sample Received: 2025/03/06

- We, Hefei Panwin Technology Co., Ltd., would like to declare that the tested sample has been evaluated in accordance with the procedures given in applied standard(s) in **Section 2.3** of this report and shown compliance with the applicable technical standards.
- All indications of PASS/FAIL in this report are based on interpretations and/or observations of test results. Measurement Uncertainties were not taken into account and are published for informational purposes only.

1 Test Laboratory

1.1 Notes of the Test Report

This report is invalid without signature of auditor and approver or with any alterations. The report shall not be partially reproduced without written approval of the testing company. Entrusted test results are only responsible for incoming samples. If there is any objection to the testing report, it shall be raised to the testing company within 15 days from the date of receiving the report. In the test results, "NA" means "not applicable", and the test items marked with "Δ" are subcontracted projects.

1.2 Test Facility

A2LA (Certificate Number: 6849.01)
Hefei Panwin Technology Co., Ltd. has been accredited by American Association for Laboratory Accreditation to perform measurement.

FCC (Designation Number: CN1361, Test Firm Registration Number: 473156)
Hefei Panwin Technology Co., Ltd. has been accredited on the US Federal Communications Commission list of test facilities recognized to perform measurements.

1.3 Testing Laboratory

Company Name	Hefei Panwin Technology Co., Ltd.
Address	Floor 1, Zone E, Plant 2#, Mingzhu Industrial Park, No.106 Chuangxin Avenue, High-tech Zone, Hefei City, Anhui Province,China
Telephone	+86-0551-63811775
Post Code	230031

2 General Description of Equipment under Test

2.1 Details of Application

Applicant	NETPRISMA INC.
Applicant Address	1301 6TH AVE, SEATTLE, WA, 98101-2304, UNITED STATES
Manufacturer	NETPRISMA INC.
Manufacturer Address	1301 6TH AVE, SEATTLE, WA, 98101-2304, UNITED STATES

2.2 Details of EUT

Product	Multi-mode Smart LTE Module with Wi-Fi & Bluetooth
Model	SUV200-LD
SN	E1C24LU1B000045
HW Version	R1.0
SW Version	SUV200LDNA0101
Antenna Type	External Antenna
Operating Frequency Range(s)	U-NII-2A: 5250MHZ-5350MHz U-NII-2C: 5470MHZ-5725MHz
Modulation Type	802.11a/n/ac: BPSK;QPSK;16QAM;64QAM;256QAM
Operating Mode	☐ Master ☐ Slave with radar detection ☑ Slave without radar detection
Note: The declared of product specification for EUT and/or Antenna presented in the report are provided by the manufacturer, and the manufacturer takes all the responsibilities for the accuracy of product specification.	

Wireless Technology and Frequency Range

Wireless Technology	Bandwidth		Channel	Frequency
	U-NII-2A	20MHz	52	5260 MHz
			56	5280 MHz
			60	5300 MHz
			64	5320 MHz
		40MHz	54	5270 MHz
			62	5310 MHz
		80MHz	58	5290 MHz
	U-NII-2C	20MHz	100	5500 MHz
			104	5520 MHz
			108	5540 MHz
			112	5560 MHz
			116	5580 MHz
			132	5660 MHz
			136	5680 MHz
			140	5700 MHz
		40MHz	102	5510 MHz
			110	5550 MHz
			118	5590 MHz
			134	5670 MHz
		80MHz	106	5530 MHz
			138	5690 MHz
Does this device support TPC function?		☐ Yes		☑ No
Does this device support TDWR band?		☑ Yes		☐ No

2.3 Application Standards

According to the specifications of the manufacturer, it must comply with the requirements of the following standards:

Test standards：

- FCC CFR47 Part 15E Unlicensed National Information Infrastructure Devices

Reference standard:

- FCC KDB 905462 D02 UNII DFS Compliance Procedures New Rules v02

3 Test Condition

3.1 DFS Detection Thresholds

Table 3 DFS Detection Thresholds for Master Devices and Client Devices with Radar Detection

Maximum Transmit Power	Value (See Notes 1, 2, and 3)
EIRP ≥ 200 milliwatt	-64dBm
EIRP < 200 milliwatt and power spectral density < 10 dBm/MHz	-62dBm
EIRP < 200 milliwatt that do not meet the power spectral density requirement	-64dBm

Note 1: This is the level at the input of the receiver assuming a 0 dBi receive antenna.
Note 2: Throughout these test procedures an additional 1 dB has been added to the amplitude of the test transmission waveforms to account for variations in measurement equipment. This will ensure that the test signal is at or above the detection threshold level to trigger a DFS response.
Note3: EIRP is based on the highest antenna gain. For MMO devices refer to KDB Publication 662911 D01.

Table 4 DFS Response Requirement Values

Parameter	Value
Non-occupancy Period	Minimum 30 minutes
Channel Availability Check Time	60 seconds
Channel Move Time	10 seconds See Note1
Channel Closing Transmission Time	200 milliseconds + an aggregate of 60 milliseconds over remaining 10 second periods see Notes 1 and 2.
U-NII Detection Bandwidth	Minimum 100% of the U-NII 99% transmission power bandwidth. See Note 3.

Note 1: Channel Move Time and the Channel Closing Transmission Time should be performed with Radar Type 0. The measurement timing begins at the end of the Radar Type 0 burst.
Note 2: The Channel Closing Transmission Time is comprised of 200 milliseconds starting at the beginning of the Channel Move Time plus any additional intermittent control signals required to facilitate a Channel move (an aggregate of 60 milliseconds) during the remainder of the 10 second period. The aggregate duration of control signals will not count quiet periods in between transmissions.
Note 3: During the U-NII Detection Bandwidth detection test, radar type 0 should be used. For each frequency step the minimum percentage of detection is 90 percent. Measurements are performed with no data traffic.

3.2 Radar Test Waveforms

Table 5 Short Pulse Radar Test Waveforms

Radar type	Pulse Width W (μsec)	PRI (μsec)	Number of Pulses	Minimum Percentage of Successful Detection	Minimum Number of Trials
0	1	1428	18	See Note 1	See Note 1
1	1	Test A: 15 unique PRI values randomly selected from the list of 23 PRI values in Table 5a Test B: 15 unique PRI values randomly selected within the range of 518-3066 μsec, with a minimum increment of 1 μsec excluding PRI values selected in Test A	Roundup	60%	30
2	1-5	150-230	23-29	60%	30
3	6-10	200-500	16-18	60%	30
4	11-20	200-500	12-16	60%	30
Aggregate (Radar Types 1-4)				80%	120
Note 1: Short Pulse Radar Type 0 should be used for the detection bandwidth test, channel move time, and channel closing time tests.					

Table 5a Pulse Repetition Intervals Values for Test A

Pulse Repetition Frequency Number	Pulse Repetition Frequency(Pulses Per Second)	Pulse Repetition Interval(Microseconds)
1	1930.5	518
2	1858.7	538
3	1792.1	558
4	1730.1	578
5	1672.2	598
6	1618.1	618
7	1567.4	638
8	1519.8	658
9	1474.9	678
10	1432.7	698
11	1392.8	718
12	1355	738
13	1319.3	758
14	1285.3	778
15	1253.1	798
16	1222.5	818
17	1193.3	838

18	1165.6	858
19	1139	878
20	1113.6	898
21	1089.3	918
22	1066.1	938
23	326.2	3066

The aggregate is the average of the percentage of successful detections of Short Pulse Radar Types1-4. For example, the following table indicates how to compute the aggregate of percentage of successful detections.

Radar type	Number of Trials	Number of Successful Detections	Minimum Percentage of Successful Detection
1	35	29	82.9%
2	30	18	60%
3	30	27	90%
4	50	44	88%

Table 6 Long Pulse Radar Test Waveform

Radar type	Pulse Width (μsec)	Chirp Width (MHz)	PRI(μsec)	Number of Pulses per Burst	Number of Bursts	Minimum Percentage of Successful Detection	Minimum Number of Trials
5	50-100	5-20	1000-2000	1-3	8-20	80%	30

The parameters for this waveform are randomly chosen.Thirty unique waveforms are required for the Long Pulse Radar Type waveforms. If more than 30 waveforms are used for the Long Pulse Radar Type waveforms, then each additional waveform must also be unique and not repeated from the previous waveforms.

Table 7 Frequency Hopping Radar Test Waveform

Radar type	Pulse Width (μsec)	PRI(μsec)	Pulses per Hop	Hopping Rate (kHz)	Hopping Sequence Length msec	Minimum Percentage of Successful Detection	Minimum Number of Trials
6	1	333	9	0.333	300	70%	30

For the Frequency Hopping Radar Type, the same Burst parameters are used for each waveform. The hopping sequence is different for each waveform and a 100 length segment is selected from the hopping sequence defined by the following algorithm: The first frequency in a hopping sequence is selected randomly from the group of 475 integer frequencies from 5250 - 5724 MHz. Next, the frequency that was just chosen is removed from the group and a frequency is randomly selected from the remaining 474 frequencies in the group. This process continues until all 475 frequencies are chosen for the set. For selection of a random frequency, the frequencies remaining within the group are always treated as equally likely.

3.3 Test setups

Setup for Master with Injection at the Master

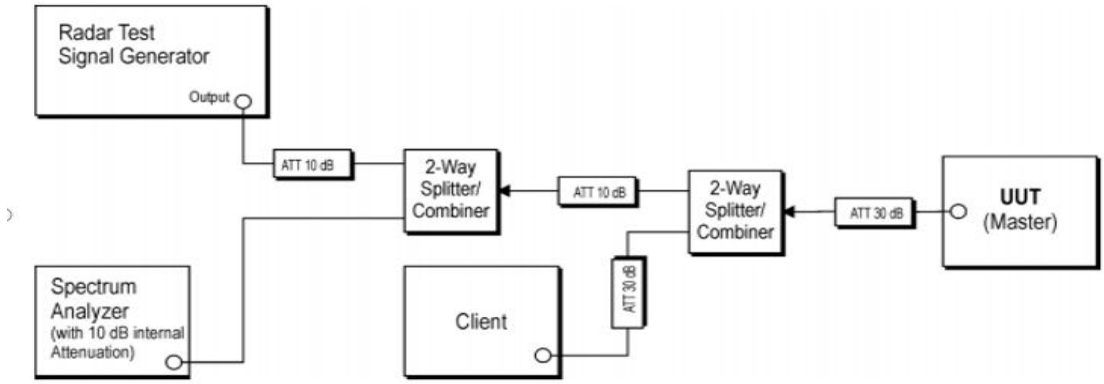

Figure 2: Example Conducted Setup where UUT is a Master and Radar Test Waveforms are injected into the Master

Setup for Client with Injection at the Master

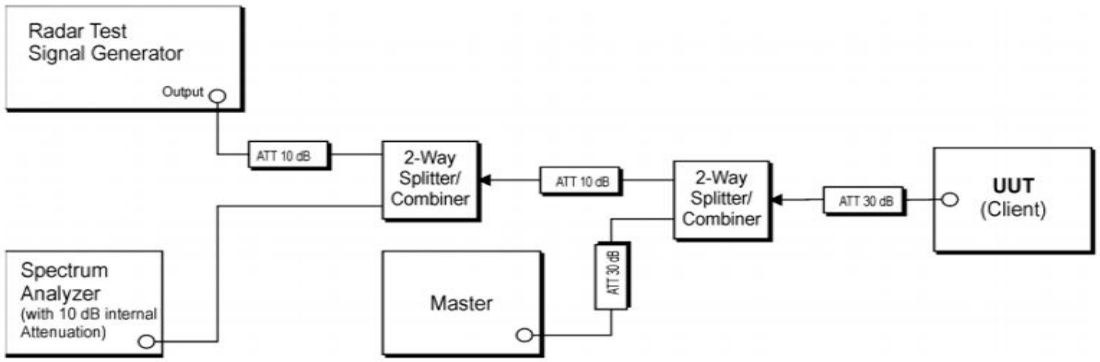

Figure 3: Example Conducted Setup where UUT is a Client and Radar Test Waveforms are injected into the Master

Setup for Client with Injection at the Client

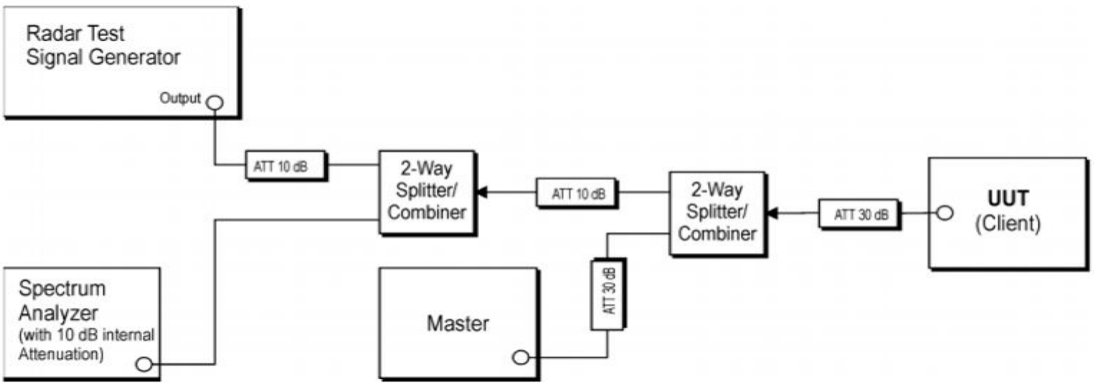

Figure 4: Example Conducted Setup where UUT is a Client and Radar Test Waveforms are injected into the Client

3.4 Equipment List

Instrument	Manufacturer	Model	Asset No.	Cal. Interval	Cal. Due Date
Spectrum Analyzer	R&S	FSV3044	PWC0009	1 Year	2025/09/11
Vector Signal Generator	R&S	SMBV100B	PWC0011	1 Year	2025/09/11
Power Meter Unit	Tonscend	JS0806-2-8CH	PWC0013	1 Year	2025/09/12
DC Power	Keysight	E3640A	PWC0027	1 Year	2025/09/12
Shielded Chamber	MIX-BEP	SR 433	PWC0001	3 Years	2027/07/09
Test Software	Tonseced	JS1120-3 V3.2.22	/	/	/

3.5 Support Equipment List

Equipment	Manufacturer	Description	Model	Serial Number
EVB	NETPRISMA INC.	/	Q1-A0770	MPY24F82X000232
Router	ASUS	Frequency:2.4/5GHz	RT-AX88U	/

4 Test Items Description

Ambient condition

Shielded Chamber

Temperature [°C]	20.7 to 25.4
Humidity [%RH]	31 to 50
Pressure [kPa]	100.2 to 104.1

4.1. DFS Detection Thresholds

Methods of Measurement

Client with injection at the Master.

For a detection threshold level of -64dBm, the required signal strength at EUT antenna location is -64dBm, the tested level is lower than required level hence it provides margin to the limit.

Frequency of Calibration	
Bandwidth	**Central Frequency**
80M	5530

Test Results:

See ANNEX A.1.

4.2 U-NII Detection Bandwidth

Methods of Measurement

1. Adjust the equipment to produce a single Burst of any one of the Short Pulse Radar Types 0 – 4 in **Table 5** at the center frequency of the EUT Operating Channel at the specified DFS Detection Threshold level found in **Table 3**.

2. Set the EUT up as a standalone device (no associated Client or Master, as appropriate) and no traffic. Frame based systems will be set to a talk/listen ratio reflecting the worst case (maximum) that is user configurable during this test.

3. Generate a single radar Burst, and note the response of the UUT. Repeat for a minimum of 10 trials. The EUT must detect the Radar Waveform within the DFS band using the specified U-NII Detection Bandwidth criterion shown in **Table4.** In cases where the channel bandwidth may exceed past the DFS band edge on specific channels select a channel that has the entire emission bandwidth within the DFS band. If this is not possible, test the detection BW to the DFS band edge.

4. Starting at the center frequency of the EUT operating Channel, increase the radar frequency in 5 MHz steps, repeating the above test sequence, until the detection rate falls below the U-NII Detection Bandwidth criterion specified in **Table 4**. Repeat this measurement in 1MHz steps at frequencies 5 MHz below where the detection rate begins to fall. Record the highest frequency (denote as FH) at which detection is greater than or equal to the U-NII Detection Bandwidth criterion. Recording the detection rate at frequencies above FH is not required to demonstrate compliance.

5. Starting at the center frequency of the EUT operating Channel, decrease the radar frequency in 5 MHz steps, repeating the above test sequence, until the detection rate falls below the U-NII Detection Bandwidth criterion specified in Table 4. Repeat this measurement in 1MHz steps at frequencies 5 MHz above where the detection rate begins to fall. Record the lowest frequency (denote as FL) at which detection is greater than or equal to the U-NII Detection Bandwidth criterion. Recording the detection rate at frequencies below FL is not required to demonstrate compliance.

6. The U-NII Detection Bandwidth is calculated as follows: U-NII Detection Bandwidth = FH – FL.

7. The U-NII Detection Bandwidth must meet the U-NII Detection Bandwidth criterion specified in **Table 4.**Otherwise, the EUT does not comply with DFS requirements. This is essential to ensure that the EUT is capable of detecting Radar Waveforms across the same frequency spectrum that contains the significant energy from the system. In the case that the U-NII Detection Bandwidth is greater than or equal to the 99 percent power bandwidth for the measured FH and FL, the test can be truncated and the U-NII Detection Bandwidth can be reported as the measured FH and FL.

Limits

Rule FCC KDB 905462 7.8.1

Minimum 100% of the U-NII 99% transmission power bandwidth. During the U-NII Detection Bandwidth detection test, radar type 0 should be used. For each frequency step the minimum percentage of detection is 90 percent. Measurements are performed with no data traffic.

Test Results:

See ANNEX A.2.

Remark: This test item is not applicable.

4.3 Channel Availability Check Time

Methods of Measurement

Initial Channel Availability Check Time

The U-NII devices will be powered on and be instructed to operate on the appropriate U-NII Channel that must incorporate DFS functions. At the same time the EUT is powered on, the spectrum analyzer will be set to zero span mode with a 3 MHz RBW and 3 MHz VBW on the Channel occupied by the radar with a 2.5 minute sweep time.

The EUT should not transmit any beacon or data transmissions until at least 1 minute after the completion of the power-on cycle.

Confirm that the EUT initiates transmission on the channel.

Radar Burst at the Beginning of the Channel Availability Check Time

The steps below define the procedure to verify successful radar detection on the test Channel during a period equal to the Channel Availability Check Time and avoidance of operation on that Channel when a radar Burst with a level equal to the DFS Detection Threshold + 1 dB occurs at the beginning of the Channel Availability Check Time.

The Radar Waveform generator and EUT are connected using the applicable test setup described in the sections on configuration for Conducted Tests or Radiated Tests and the power of the EUT is switched off.

The EUT is powered on at T_0 - T_1 denotes the instant when the EUT has completed its power-up sequence (Tpower_up). The Channel Availability Check Time commences on Chr at instant T_1 and will end no sooner than T_1 + $T_{ch_avail_check}$.

A single Burst of one of the Short Pulse Radar Types 0-4 will commence within a 6 second window starting at T_1. An additional 1 dB is added to the radar test signal to ensure it is at or above the DFS Detection Threshold, accounting for equipment variations/errors.

Visual indication or measured results on the EUT of successful detection of the radar Burst will be recorded and reported. Observation of Chr for EUT emissions will continue for 2.5 minutes after the radar Burst has been generated.

Verify that during the 2.5 minute measurement window no EUT transmissions occurred on Chr. The Channel Availability Check results will be recorded.

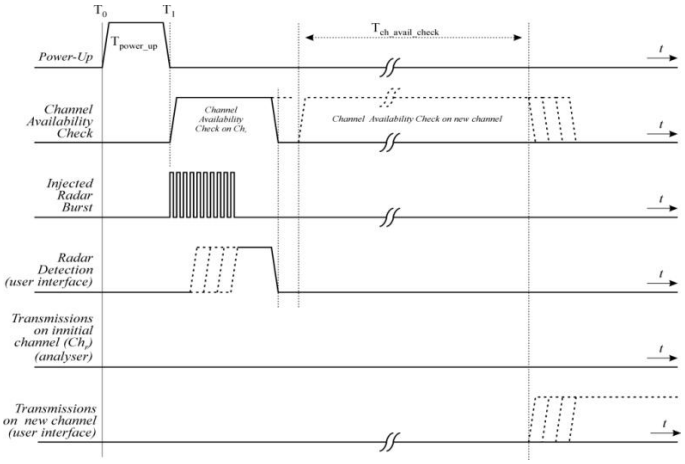

Figure: Example of timing for radar testing at the beginning of the Channel Availability Check Time

Radar Burst at the End of the Channel Availability Check Time

The steps below define the procedure to verify successful radar detection on the test Channel during a period equal to the Channel Availability Check Time and avoidance of operation on that Channel when a radar Burst with a level equal to the DFS Detection Threshold + 1dB occurs at the end of the Channel Availability Check Time.

1. The Radar Waveform generator and EUT are connected using the applicable test setup described in the sections for Conducted Tests or Radiated Tests and the power of the EUT is switched off.

2. The EUT is powered on at T_0 - T_1 denotes the instant when the EUT has completed its power-up sequence (T_{power_up}). The Channel Availability Check Time commences on Chr at instant T1 and will end no sooner than T_1 + $T_{ch_avail_check}$.

3. A single Burst of one of the Short Pulse Radar Types 0-4 will commence within a 6 second window starting at T_1 + 54 seconds. An additional 1 dB is added to the radar test signal to ensure it is at or above the DFS Detection Threshold, accounting for equipment variations/errors.

4. Visual indication or measured results on the EUT of successful detection of the radar Burst will be recorded and reported. Observation of Chr for EUT emissions will continue for 2.5 minutes after the radar Burst has been generated.

5. Verify that during the 2.5 minute measurement window no EUT transmissions occurred on Chr. The Channel Availability Check results will be recorded.

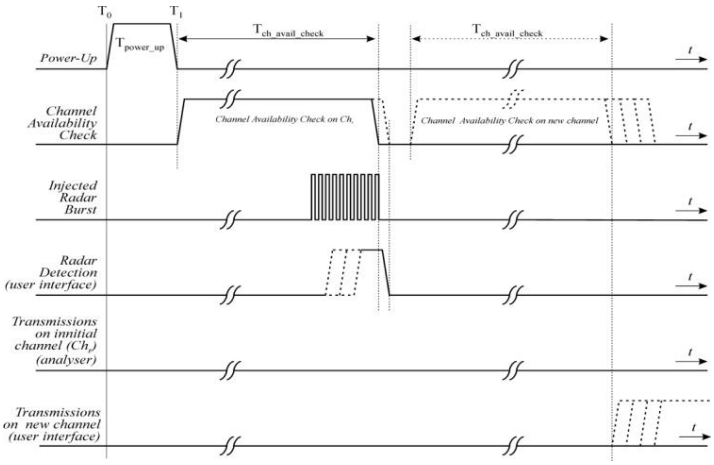

Figure: Example of timing for radar testing towards the end of the Channel Availability Check Time

Limits

Initial Channel Availability Check Time	60s

Test Results:

See ANNEX A.3.

Remark: This test item is not applicable.

4.4 Channel Move Time, Channel Closing Transmission Time and Non-Occupancy Period

Methods of Measurement

These tests define how the following DFS parameters are verified during In-Service Monitoring:

- Channel Closing Transmission Time
- Channel Move Time
- Non-Occupancy Period

The steps below define the procedure to determine the above mentioned parameters when a radar Burst with a level equal to the DFS Detection Threshold + 1dB is generated on the Operating Channel of the U-NII device (In- Service Monitoring).

1. One frequency will be chosen from the Operating Channels of the EUT within the 5250-5350 MHz or 5470-5725 MHz bands. For 802.11 devices, the test frequency must contain control signals. This can be verified by disabling channel loading and monitoring the spectrum analyzer. If no control signals are detected, another frequency must be selected within the emission bandwidth where control signals are detected.
2. In case the EUT is a U-NII device operating as a Client Device (with or without DFS), a U-NII device operating as a Master Device will be used to allow the EUT (Client device) to Associate with the Master Device. In case the EUT is a Master Device, a U-NII device operating as a Client Device will be used and it is assumed that the Client will Associate with the EUT (Master). In both cases for conducted tests, the Radar Waveform generator will be connected to the Master Device. For radiated tests, the emissions of the Radar Waveform generator will be directed towards the Master Device. If the Master Device has antenna gain, the main beam of the antenna will be directed toward the radar emitter. Vertical polarization is used for testing.
3. Stream the channel loading test file from the Master Device to the Client Device on the test Channel for the entire period of the test.
4. At time T0 the Radar Waveform generator sends a Burst of pulses for one of the Radar Type 0 in Table 5 at levels defined in Table 3, on the Operating Channel. An additional 1 dB is added to the radar test signal to ensure it is at or above the DFS Detection Threshold, accounting for equipment variations/errors.
5. Observe the transmissions of the EUT at the end of the radar Burst on the Operating Channel for duration greater than 10 seconds. Measure and record the transmissions from the EUT during the observation time (Channel Move Time). Measure and record the Channel Move Time and Channel Closing Transmission Time if radar detection occurs. Figure 17 illustrates Channel Closing Transmission Time.
6. When operating as a Master Device, monitor the EUT for more than 30 minutes following instant T2 to verify that the EUT does not resume any transmissions on this Channel. Perform this test once and record the measurement result.
7. In case the EUT is a U-NII device operating as a Client Device with In-Service Monitoring, perform steps 1 to 6.

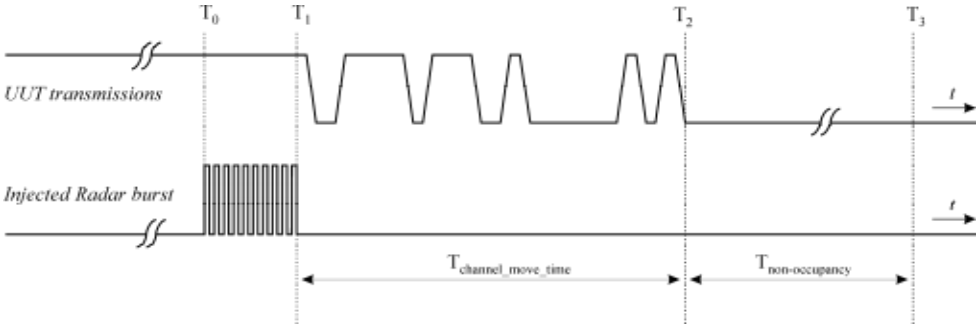

Figure 17: Example of Channel Closing Transmission Time & Channel Closing Time

Limits

Channel Move Time	≤10s
Channel Closing Transmission Time	≤200ms + 60ms (over remaining 10s period)
Non-Occupancy Period	≥30min

Note 1: Channel Move Time and the Channel Closing Transmission Time should be performed with Radar Type 0. The measurement timing begins at the end of the Radar Type 0 burst.
Note 2: The Channel Closing Transmission Time is comprised of 200 milliseconds starting at the beginning of the Channel Move Time plus any additional intermittent control signals required to facilitate Channel move (an aggregate of 60 milliseconds) during the remainder of the 10 second period. The aggregate duration of control signals will not count quiet periods in between transmissions.

Test Results:

See ANNEX A.4.

4.5 Statistical Performance Check

Methods of Measurement

The steps below define the procedure to determine the minimum percentage of successful detection requirements found in Tables 5-7 when a radar burst with a level equal to the DFS Detection Threshold + 1dB is generated on the Operating Channel of the U-NII device (In- Service Monitoring).

1. One frequency will be chosen from the Operating Channels of the UUT within the 5250-5350 MHz or 5470-5725 MHz bands.

2. In case the UUT is a U-NII device operating as a Client Device (with or without Radar Detection), a U-NII device operating as a Master Device will be used to allow the UUT (Client device) to Associate with the Master Device. In case the UUT is a Master Device, a U-NII device operating as a Client Device will be used and it is assumed that the Client will Associate with the UUT(Master). In both cases for conducted tests, the Radar Waveform generator will be connected to the Master Device. For radiated tests, the emissions of the Radar Waveform generator will be directed towards the Master Device. If the Master Device has antenna gain, the main beam of the antenna will be directed toward the radar emitter. Vertical polarization is used for testing.

3. Stream the channel loading test file from the Master Device to the Client Device on the test Channel for the entire period of the test.

4. At time T0 the Radar Waveform generator sends the individual waveform for each of the Radar Types 1- 6 in Tables 5-7, at levels defined in Table 3, on the Operating Channel. An additional 1 dB is added to the radar test signal to ensure it is at or above the DFS Detection Threshold, accounting for equipment variations/errors.

5. Observe the transmissions of the UUT at the end of the Burst on the Operating Channel for duration greater than 10 seconds for Radar Type 0 to ensure detection occurs.

6. Observe the transmissions of the UUT at the end of the Burst on the Operating Channel for duration greater than 22 seconds for Long Pulse Radar Type 5 to ensure detection occurs.

7. In case the UUT is a U-NII device operating as a Client Device with In-Service Monitoring, perform steps 1 to 6.

Limits

Radar Type	Minimum Percentage of Successful Detection	Minimum Number of Trials
1	60%	30
2	60%	30
3	60%	30
4	60%	30
Aggregate (Radar Types 1-4)	80%	120
5	80%	30
6	70%	30

Test Results

See ANNEX A.5.

Remark: This test item is not applicable.

-------- THE END --------

ANNEX A: Test Results of Conducted Test

A.1. DFS Detection Thresholds

Test Result

Test Mode	Frequency[dBm]	Radar Type	Result	Limit[dBm]	Verdict
11AC80SISO	5530	Type0	-60.81	-60.72	PASS

Test Graphs

11AC80SISO-5530-Type0-PASS

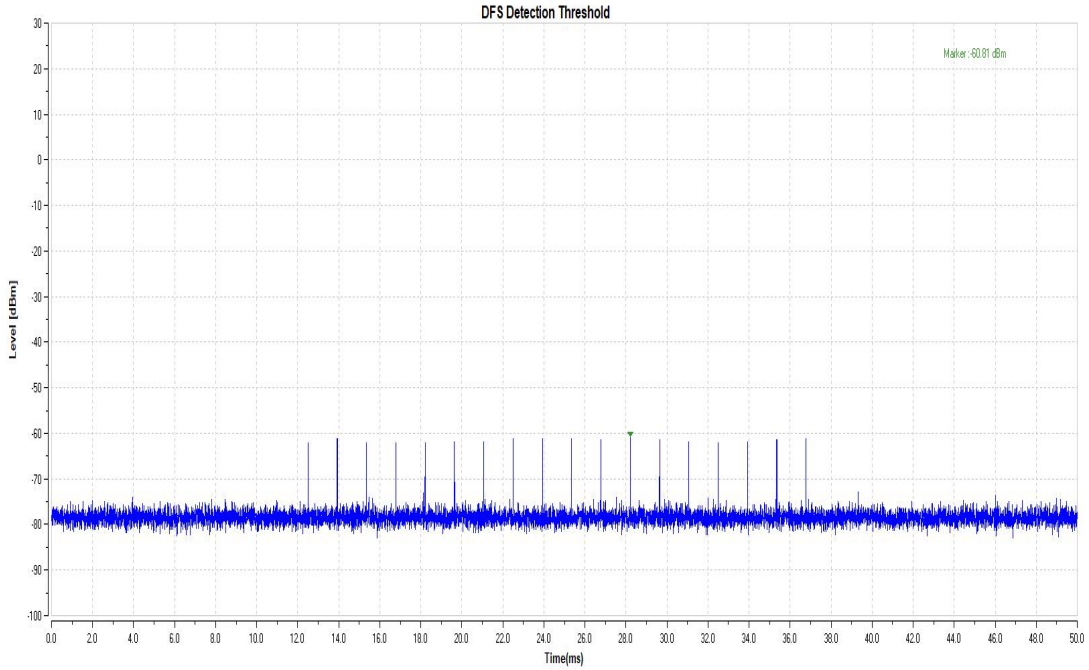

A.2 U-NII Detection Bandwidth

Test Result

Remark: This test item is not applicable.

A.3 Channel Availability Check Time

Test Result

Remark: This test item is not applicable.

A.4 Channel Move Time, Channel Closing Transmission Time and Non-Occupancy Period

Test Result_Channel Move Time, Channel Closing Transmission Time

Test Mode	Frequency[MHz]	CCTT[ms]	Limit[ms]	CMT[ms]	Limit[ms]	Verdict
11AC80SISO	5530	200+13	200+60	847.3	10000	PASS

Test Graphs_Channel Move Time, Channel Closing Transmission Time

11AC80SISO-5530-Type0-PASS

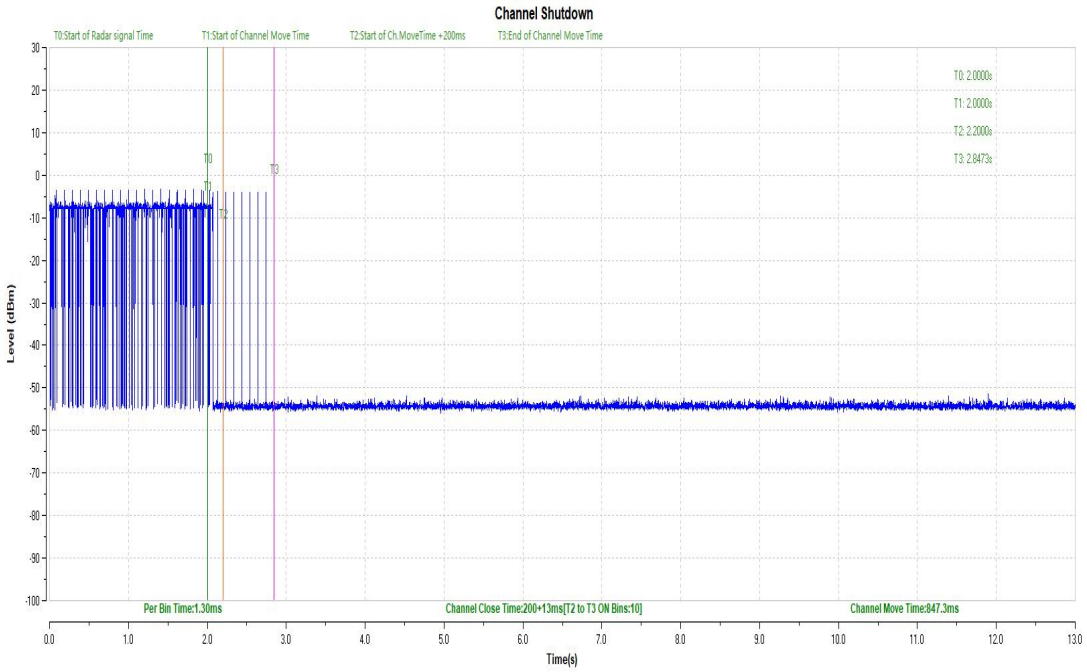

Test Result_Non-Occupancy Period

Test Mode	Frequency[MHz]	Result	Limit[s]	Verdict
11AC80SISO	5530	see test graph	≥1800	PASS

Test Graphs_Non-Occupancy Period

11AC80SISO-5530-Type0-PASS

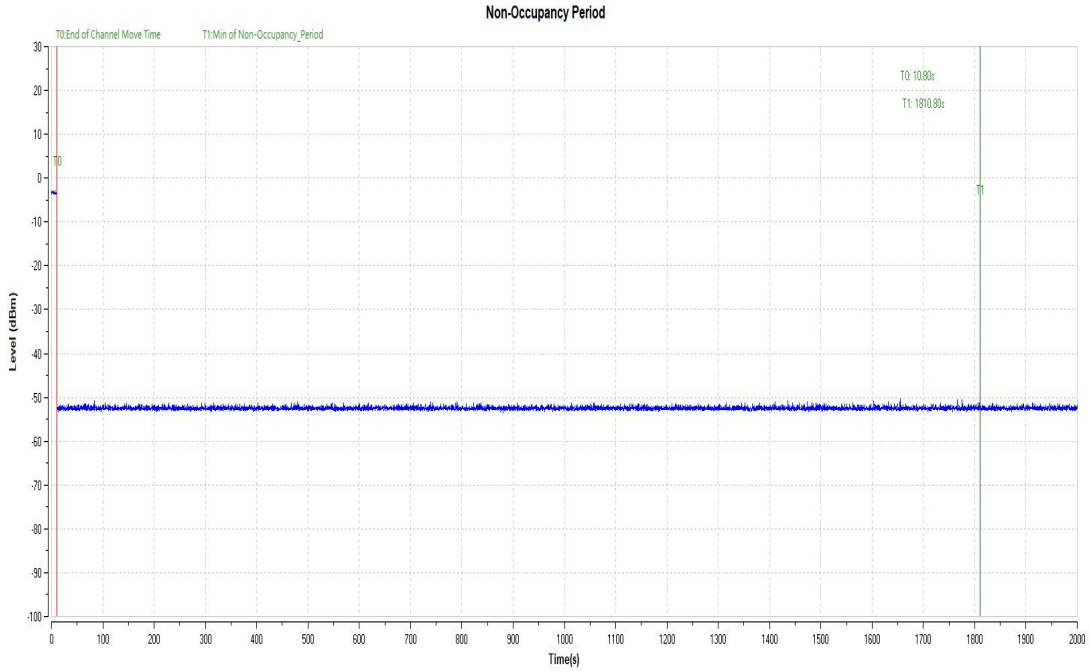

A.5 Statistical Performance Check

Test Result

Remark: This test item is not applicable.

ANNEX B: The EUT Appearance

The EUT Appearance (internal and external photographs) are submitted separately.

ANNEX C: Test Setup Photograph

The Test Setup Photographs are submitted separately.