ANTENNEX

User Manual [EN]

Model: RC-01-0202

Version: 1.0

Date: 27/02/2024

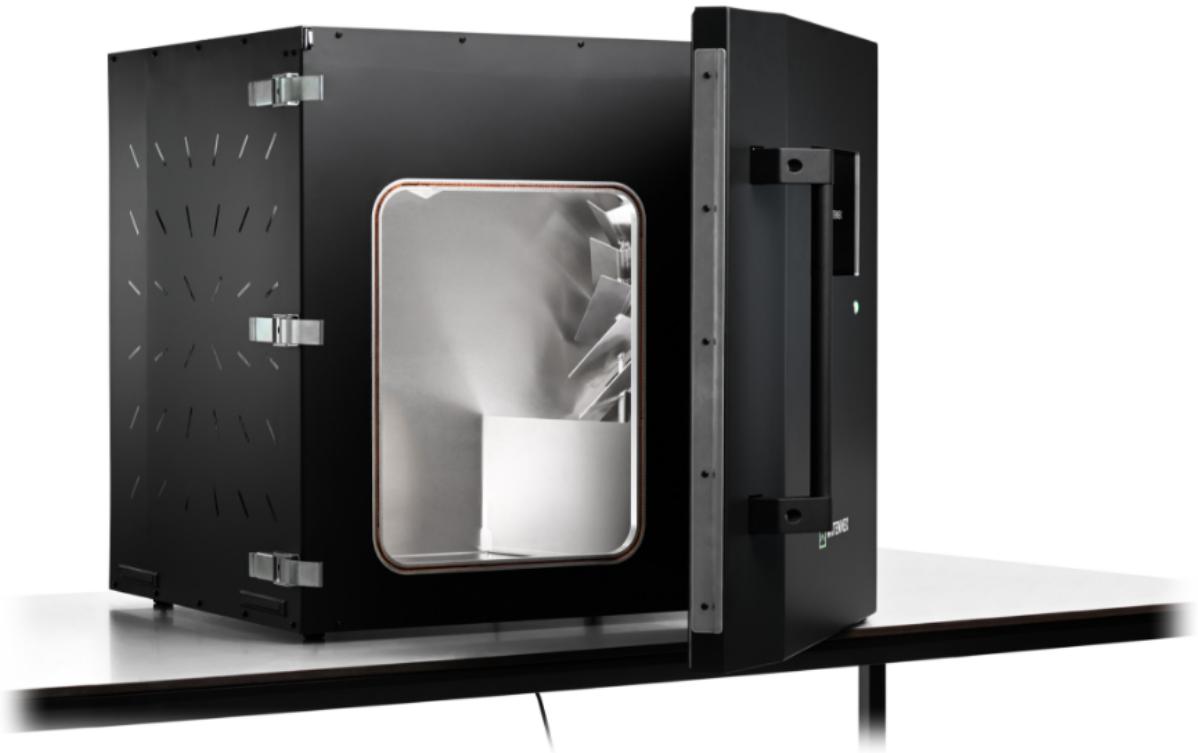

ANTENNEX products are covered by EU and foreign patents, issued and pending. Information in this publication supersedes that in all previously published material. Specifications and price change privileges reserved.

MATLAB is a registered trademark of The MathWorks, Inc.

Contacting ANTENNEX

ANTENNEX B.V.
Postbus 80
5600 AB, Eindhoven
The Netherlands

For product information, sales, service, and technical support visit https://antennex.tech/ or send an email to info@antennex.tech

Table of Contents

Table of Contents....i
Preface....iii
The Product....iii
Purpose of the Manual....iii
The Reverberation Chamber....1
Safety instructions....3
General....3
Environmental....3
Regulations....3
Installation....6
Unpack the chamber....6
Prepare the chamber....6
Position the chamber....6
Install the stirrers....7
Electrical connection....9
Usage....10
Powering on....10
Connecting the spectrum analyzer....11
Setting up the DUT....12
Calibration....13
Calibrating the Chamber for Measurement....13
Starting a TRP Measurement....16
Advanced Settings....19
Using the API....21
Maintenance....22
Cleaning....22
Replacing the fuse....22
Problem solving....24
Software and User Interface....24
PROBLEM....24
SOLUTION....24
Warnings and errors....24
PROBLEM....24
SOLUTION....24
Measurement and Calibration....26
PROBLEM....26

SOLUTION.....26
Power.....26
Safety and Damages.....26
Specifications.....28
Description.....28
Specifications.....28
Packaging.....29

Preface

This manual is intended to provide essential guidance on installing, configuring and operating the ANTENNEX Reverberation Chamber in a safe way.

The Product

The ANTENNEX Reverberation Chamber is a test chamber developed for mmWave (millimeter-wave) applications. This test chamber enables the measurement and validation of radio performance, including Total Radiated Power (TRP) measurements. The chamber is equipped with features, such as a built-in calibration module and an intuitive touchscreen control system, making it a suitable tool for research, development, and quality control in mmWave applications.

Purpose of the Manual

The purpose of this manual is to provide you with all the necessary information for the safe setup, operation, and maintenance of the ANTENNEX Reverberation Chamber. Additionally, this manual will guide you through calibration procedures. It is essential that you carefully read this manual before using the product to ensure that you can fully harness its functionality and minimize potential risks.

We highly recommend using this manual as a reference for all steps of using the reverberation chamber, from installation to maintenance, to ensure that you achieve the best possible results.

The Reverberation Chamber

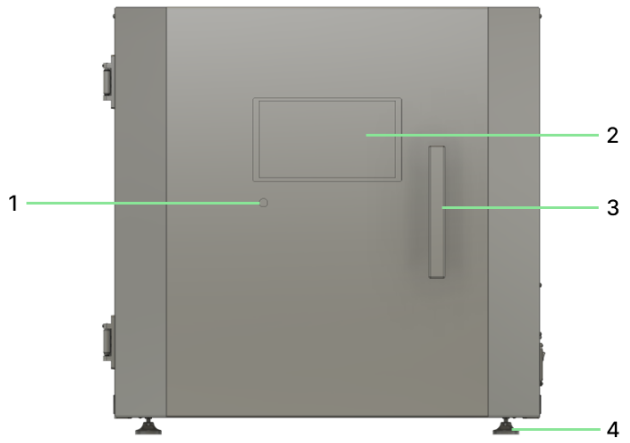

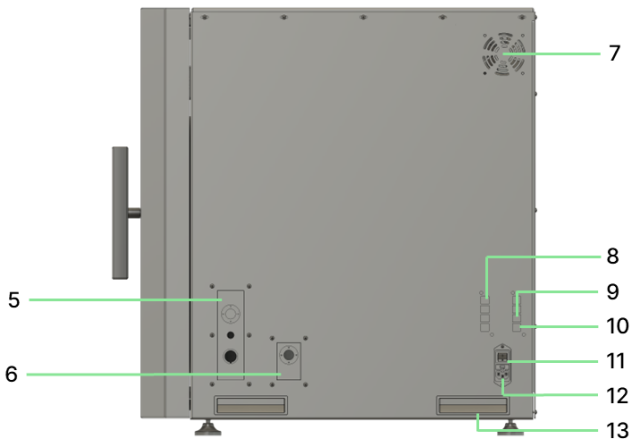

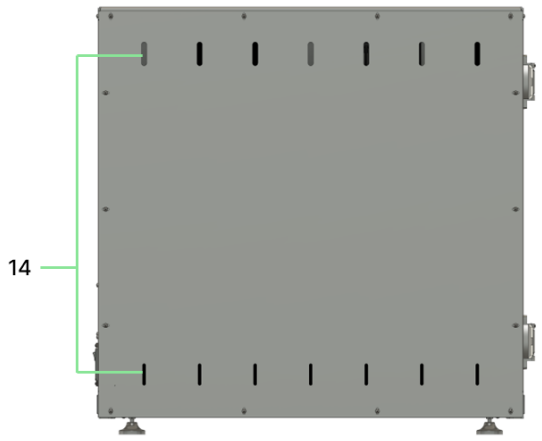

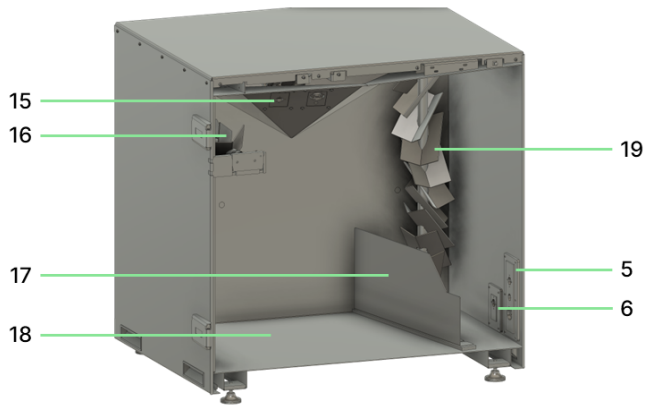

REF	SPECIFICATION	REF	SPECIFICATION
1	On/off button	11	Main power switch
2	Touch screen	12	Main power inlet
3	Door handle and closing mechanism	13	Handle to lift device
4	Adjustable feet	14	Ventilation hole in
5	DUT Feedthrough	15	Calibration module
6	Reference Antenna Feedthrough	16	Horizontal stirrer
7	Ventilation hole out	17	Blocking plate
8	4x USB	18	DUT area
9	2x Ethernet	19	Vertical stirrer
10	1x HDMI		

Safety instructions

It's essential to follow these safety instructions to ensure the safe and proper operation of the reverberation chamber while preventing accidents and injuries.

General

- Always read the user manual thoroughly before using the reverberation chamber.
- Do not use the reverberation chamber for any purpose other than what is described in the user manual.
- The reverberation chamber is intended for use only by individuals aged 16 years or older.
- The reverberation chamber is designed for use in non-residential, professional, and industrial settings. It is not intended for residential or domestic environments.
- The reverberation chamber must be connected to a power outlet with protective earthing to ensure electrical safety.
- Damaged power cables must only be replaced by a qualified electrician to ensure electrical safety.
- Use the reverberation chamber exclusively in a laboratory or office environment for wireless equipment testing.
- Ensure that the ventilation openings remain unobstructed. Leave a minimum of 10 cm of clearance at the back of the reverberation chamber to prevent overheating.
- Do not lean on the door when it is open, as this may cause the reverberation chamber to tilt and fall.
- Ensure that the DUT feedthrough, reference antenna, and the door are securely and firmly closed during measurements to prevent interference with the surrounding environment.
- Always keep children under supervision. An open door may allow a child to climb inside, potentially causing the chamber to tip over and fall.
- Always lift and move the chamber with two persons, using the designated handles located on both sides of the equipment. All four handles must be used for a secure grip. Keep the chamber upright during transportation and ensure the door is securely closed while moving.

Environmental

- Use the device only within an ambient temperature range of 10 to 30 degrees Celsius and a relative humidity range of 20-80%, ensuring that condensation does not occur.
- During storage and transportation, maintain an environment above freezing, within the temperature range of 0 to 50 degrees Celsius, and a relative humidity range of 20-80%, ensuring that condensation does not occur.
- Always transport the reverberation chamber in an upright position.

Regulations

- Emissions, which exceed the levels required by the standard EN IEC 61326-1:2021, can occur when the EUT is connected to a test object.
- Be aware that in environments with high levels of Radio Frequency Interference (RFI), the chamber may experience performance loss.
- Electrostatic Discharge (ESD) can temporarily affect components, such as the display, causing brief malfunctions.

Please be aware that this reverberation chamber has not been certified with a CE or FCC marking yet. It is intended for prototyping or development purposes. The manufacturer cannot guarantee that it will not interfere with other devices or be affected by other devices. However, it has been designed to comply with the following standards.

STANDARDS	SPECIFICATION
RoHS Directive 2011/65/EU as amended by Directive (EU) 2015/863: - EN 63000:2018	Technical documentation for the assessment of electrical and electronic products with respect to the restriction of hazardous substances.
The following Product Safety Standards were applied: - EN 61010-1:2010 + A1:2019	Safety requirements for electrical equipment for measurement, control and laboratory use – Part 1: General requirements. - The device is classified for overvoltage category II, which is equipment intended to be supplied from the building wiring, with a nominal voltage below 300 V. - The intended environment of use has pollution degree 1. Which means no pollution, or only dry, non-conductive pollution occurs, which has no influence
The following EMC Standards were applied: - EN IEC 61326-1:2021 - EN 55011:2016 + A1:2017 + A11:2020 + A2:2021 (CISPR 11:2015, modified + CISPR 11:2015/A1:2016 + CISPR 11:2015/A2:2019)	Electrical equipment for measurement, control and laboratory use – EMC requirements – Part 1: General requirements - The device is classified as class A equipment. It is suitable for use in all locations other than those allocated in residential environments. - The device is intended to be used in a basic or controlled electromagnetic environment. Which are characterized by being supplied directly at low voltage from the public mains network, and by recognition and control of EMC threats by users of the equipment or by design of the installation Industrial, scientific and medical equipment – Radio-frequency disturbance characteristics – Limits and methods of measurement - The device is classified as class A equipment. It is suitable for use in all locations other than those allocated in residential environments. - The device is classified as Group 2 equipment. Which contains all ISM RF equipment in which radio-frequency energy is intentionally generated and used in the form of electromagnetic radiation for inspection/analysis purposes.

This device complies with Part 15 of the FCC Rules. Operation is subject to the following two conditions:

1. This device may not cause harmful interference, and
2. This device must accept any interference received, including interference that may cause undesired operation.

Changes or modifications not expressly approved by the party responsible for compliance could void the user's authority to operate the equipment.

This equipment has been tested and found to comply with the limits for a Class B digital device, pursuant to Part 15 of the FCC Rules. These limits are designed to provide reasonable protection against harmful interference in a residential installation. This equipment generates uses and can radiate radio frequency energy and, if not installed and used in accordance with the instructions, may cause harmful interference to radio communications. However, there is no guarantee that interference will not occur in a particular installation. If this equipment does cause harmful interference to radio or television reception, which can be determined by turning the equipment off and on, the user is encouraged to try to correct the interference by one of the following measures:

- Reorient or relocate the receiving antenna.
- Increase the separation between the equipment and receiver.
- Connect the equipment into an outlet on a circuit different from that to which the receiver is connected.
- Consult the dealer or an experienced radio/TV technician for help.

Installation

Unpack the chamber

1. Begin by carefully removing the packaging materials from the reverberation chamber.
2. Inspect the device and all accessories for any visible damage caused during transportation and ensure the completeness of the delivery.

Prepare the chamber

1. Open the chamber door and remove any accessories located inside.
2. Ensure that all accessories are accounted for. Refer to the specifications to identify the included accessories.
3. Close the door and secure it using the locking mechanism.

Position the chamber

1. With the help of two individuals, lift the reverberation chamber and place it on a sturdy, level table or surface.

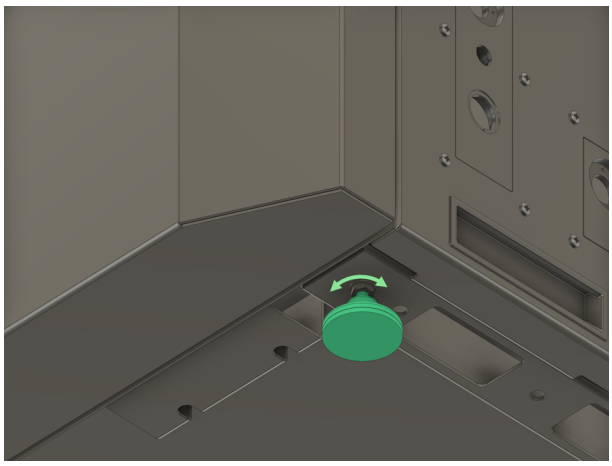

2. Adjust the leveling feet by turning them outward to provide stability.
3. Ensure that the chamber is level by using a spirit level.

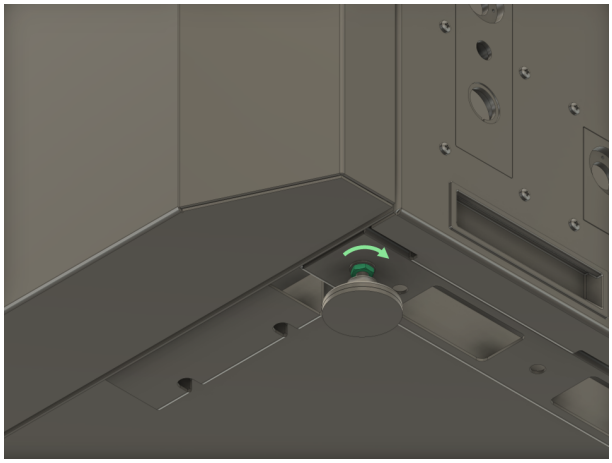

4. Once the chamber is level, tighten the lock nuts against the housing using a wrench.

Install the stirrers

1. Turn off the device and remove the power cord.

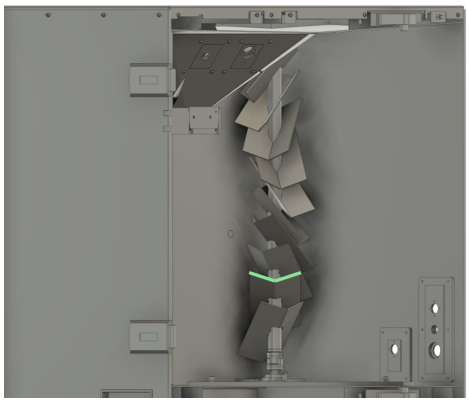

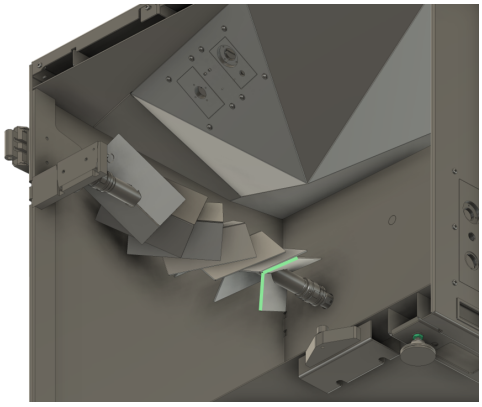

2. As a reference for the next steps: the orientation of the stirrers should be as shown above.

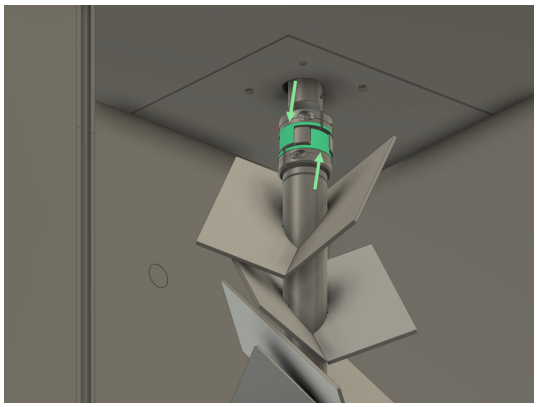

3. For both stirrers, insert the top part of each stirrer into the corresponding half of the flex coupling, making sure the teeth interlock properly.

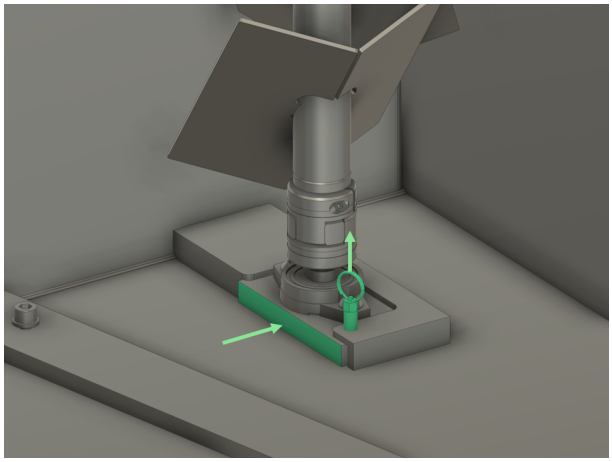

4. Pull the plunger back and slide the bottom part of the stirrer into its designated position.

Electrical connection

1. Connect the chamber electrically by inserting the power cord into the main power inlet.
2. Ensure that the power source matches the specified requirements in the user manual and that the power cord is properly connected.

Usage

Powering on

1. If the device is plugged into an electrical outlet, switch on the main power using the main power switch. The on/off button should now glow orange.

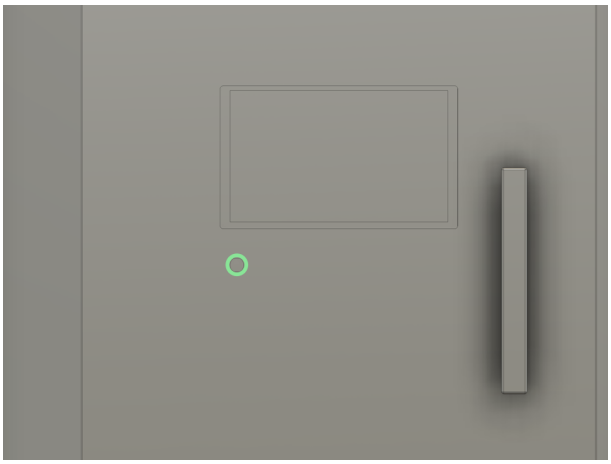

2. Press the on/off button to turn on the device.

Connecting the spectrum analyzer

1. Connect the RF port of the spectrum analyzer to the Reference Antenna port on the side of the chamber.

2. Link the spectrum analyzer to the chamber via an Ethernet connection on the side of the chamber.
3. Check the IP address of the spectrum analyzer and enter it into the settings menu of the chamber.
4. Keep in mind that the losses in the RF connection between the chamber and the spectrum analyzer need to be characterized and entered as a .csv file in the settings menu of the chamber.

Setting up the DUT

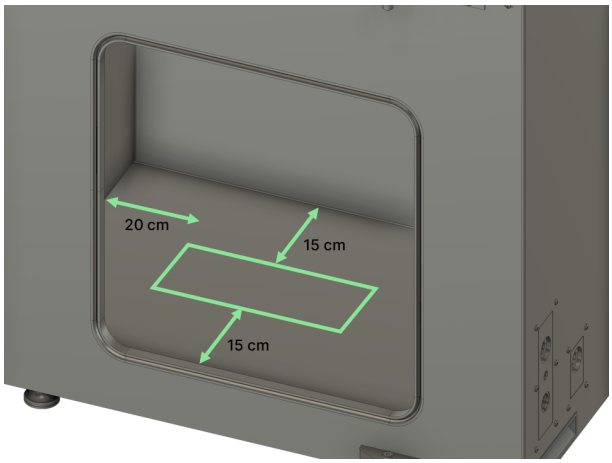

1. Place the DUT in the designated area in the center of the chamber.

2. Connect all the DUT connections. To lead them outside the chamber, you can use the provided DUT Feedthrough plate. This plate can be configured with an Ethernet connector, BNC connector for power, 2.4mm coax connector, and WR-12 waveguide bulkhead.
3. Now, you're ready to perform a measurement. Close the door.

Calibration

Calibrating the Chamber for Measurement

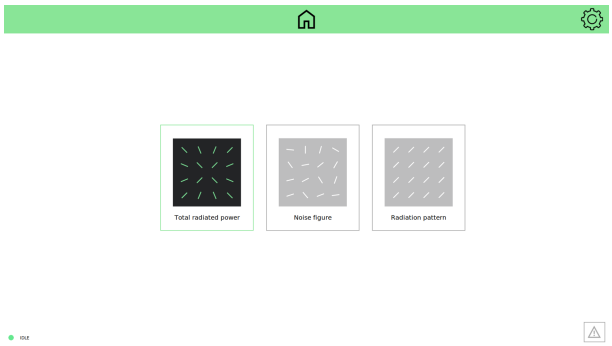

1. On the startup screen, choose the "TRP Measurement" option.

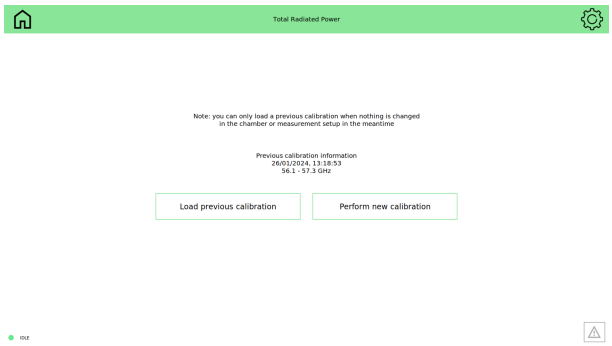

2. Within the TRP Measurement menu, select "Perform new calibration”

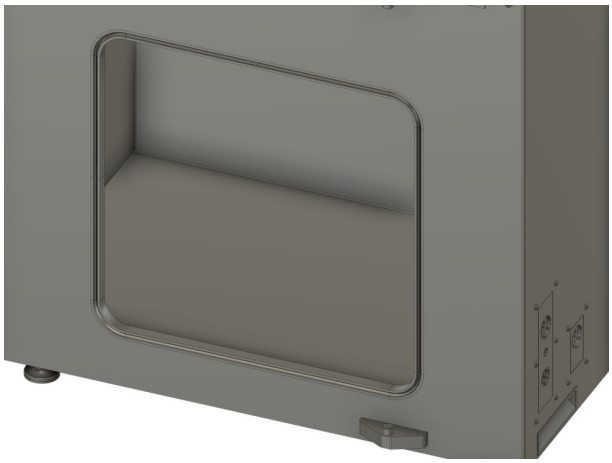

3. Empty the chamber entirely and ensure that the blocking plate is correctly positioned on the right side of the chamber, separating the reference antenna and the DUT Area, as depicted in the manual's illustrations. Install the DUT plate without any connectors to create a sealed environment.

4. Use the display to set your preferred frequency range and any additional settings. If you require full control over measurement settings, you can manually adjust the spectrum analyzer settings, as explained in the chapter below. It's crucial to ensure that the settings during calibration align with those intended for the DUT measurement to ensure precise measurement accuracy.
5. Begin the first step of the calibration process, by pressing “Perform calibration”.

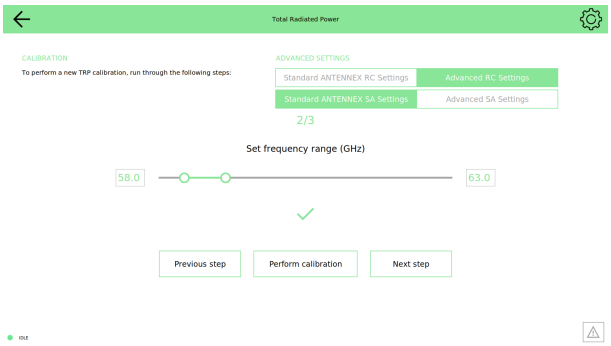

6. After completing the initial calibration step, you can proceed to set up the Device Under Test (DUT) inside the chamber, by pressing “Next step”.

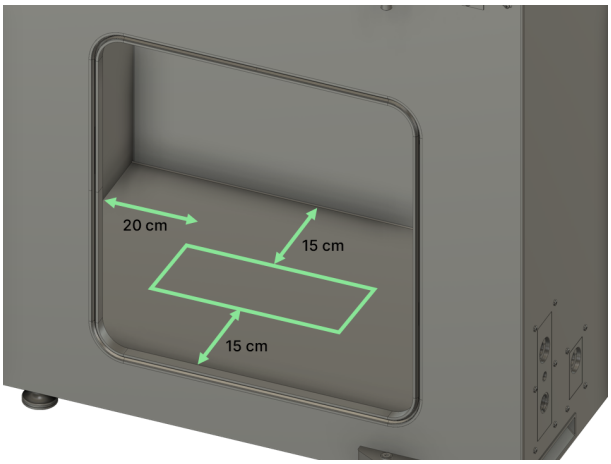

7. Ensure that the DUT is placed within the DUT Area, maintaining a distance of 15 cm from the chamber walls. If necessary, replace the DUT plate with one that has the required connectors. Connect all cables and set up the DUT as you would for the DUT measurement. Do not power on the DUT at this stage. Ensure the blocking plate is correctly positioned and close the chamber door.

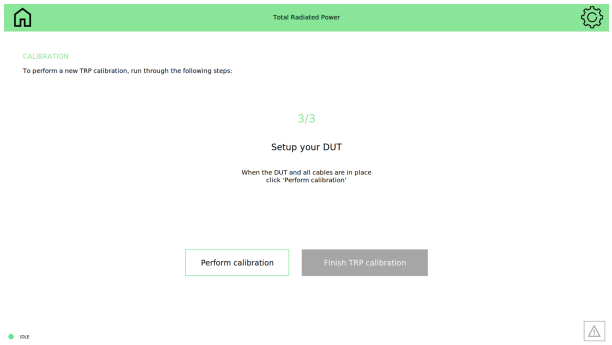

8. Use the display to initiate the second part of the calibration, by pressing “Perform calibration”.
9. Once the second part of the calibration process is finished, the calibration is now complete. The latest calibration will be saved automatically for future use.

Starting a TRP Measurement

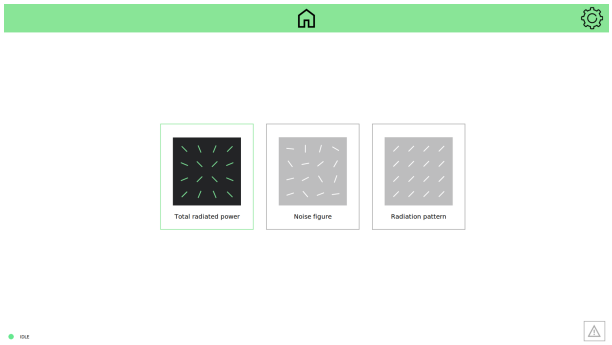

1. Begin by clicking on "TRP Measurement" from the main screen, which will guide you through the TRP measurement process.

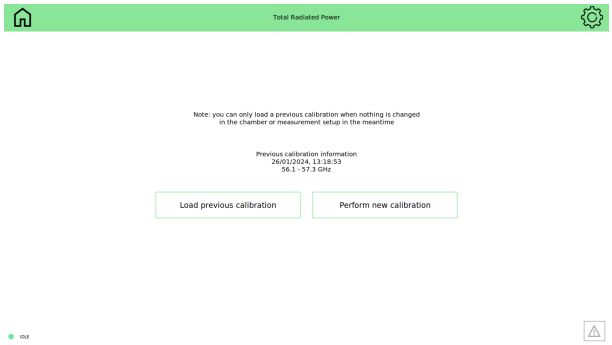

2. You will be given the option to either load a previous calibration or perform a new one. If you've previously conducted a calibration, select that option. If not, you have to follow the calibration steps provided earlier in this manual to calibrate the system.
3. Place the Device Under Test (DUT) inside the chamber and connect all the necessary cables through the DUT feedthrough on the side of the chamber. Ensure that the materials and objects inside the chamber match those used during calibration. Position the blocking plate correctly as illustrated in the beginning of this manual. Power on the DUT.

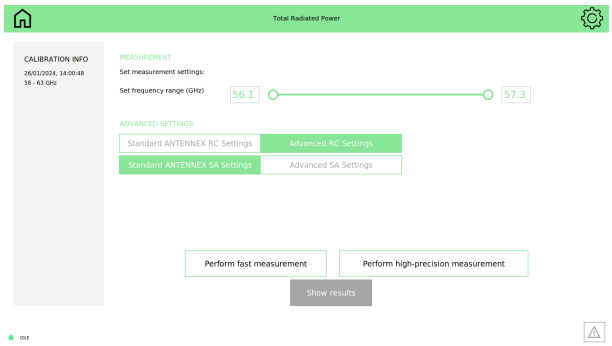

4. On the display, configure the desired measurement settings, such as the frequency range. Please note that the frequency range you can set is constrained by the range defined during the calibration measurement. For more advanced settings, refer to the "Advanced Settings" chapter.

5. You are now ready to start the measurement. Click on either "Perform fast measurement" for a quick spectrum scan or "Perform high-precision measurement" for a more precise measurement, which may take longer but provides more accurate results.

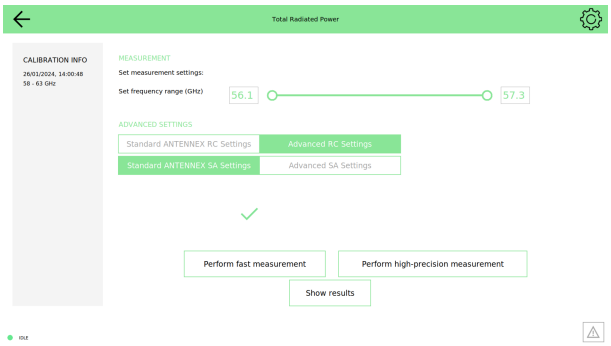

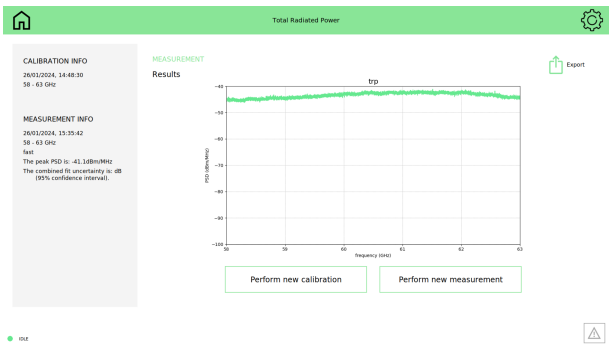

6. Once the measurement is complete, click on the "Show Result" button to view the measurement results on the display.

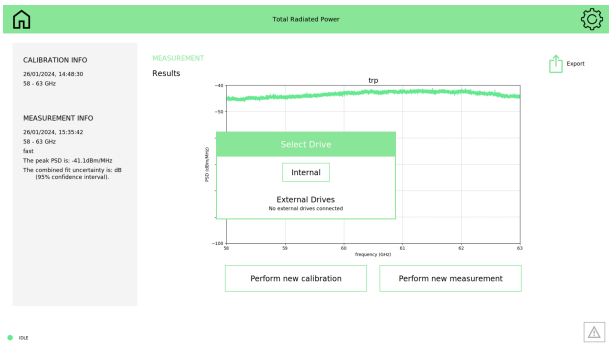

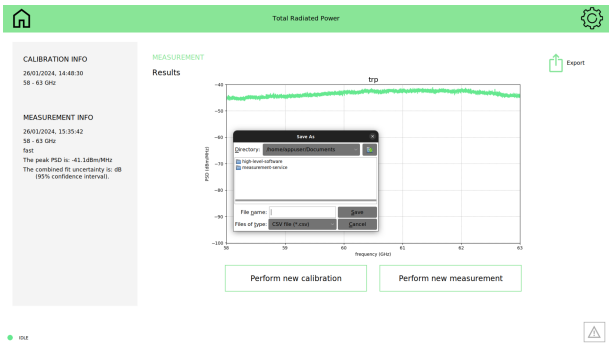

7. If you wish to export the measurement data, insert a USB drive into the side of the chamber and use the "Export Data" button to transfer the data to the USB drive for further analysis or record-keeping.

Advanced Settings

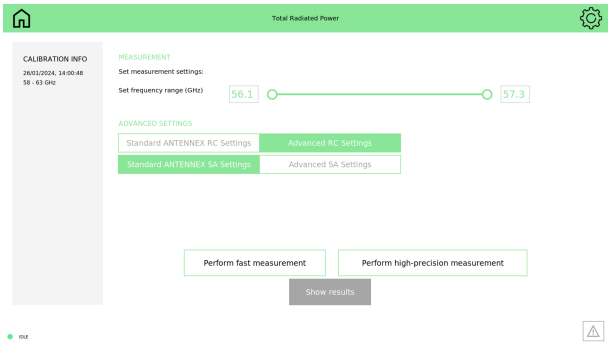

1. To use the default settings for the behavior of the stirrers and the reverberation chamber, enable the toggle switch labeled "Standard ANTENNEX RC Settings." This option ensures that the chamber and stirrers operate based on the standard settings.

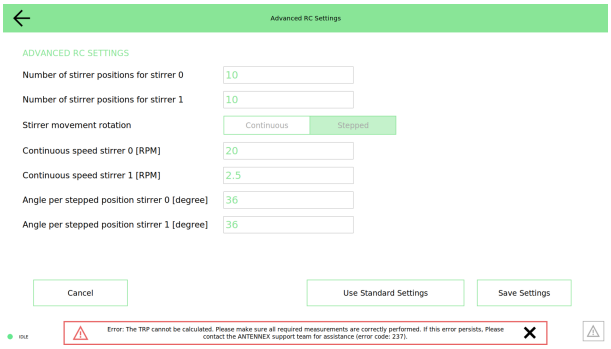

2. Selecting non-standard reverberation chamber settings provides access to the following options:
    a. You have the flexibility to specify the number of stirrer positions per stirrer.
    b. Choose between continuous or stepped stirrer rotation. Continuous rotation yields faster measurements but may result in reduced accuracy. Stepped rotation allows for precise control over measurement positions.
    c. If you opt for continuous stirrer rotation, you can define the continuous speed for both the horizontal and vertical stirrers. This setting influences the speed at which the stirrers move throughout the measurement process.
    d. In the case of stepped stirrer rotation, you can specify the angle that the stirrer should move for each stirrer position.

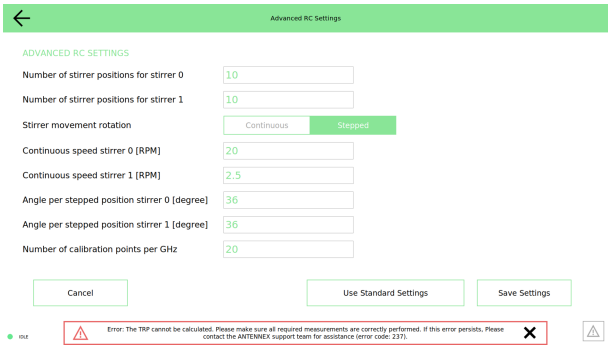

   e. In the case you entered the Advanced RC Settings menu during the calibration step, there is an extra option. Determine the number of frequency points to be captured per GHz during the calibration process. This setting affects the level of detail of the calibration data.

3. Now you can press “Save Settings” to save the current settings, after which you can return to the TRP screen. If you want to revert to the default settings, press “Use Standard Settings”. The standard settings will be loaded to the screen.

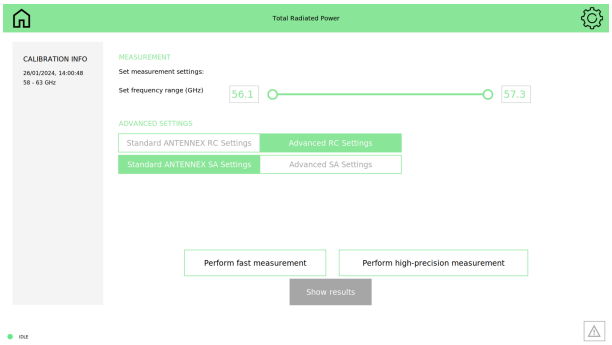

4. To apply the default settings for the behavior of the spectrum analyzer, activate the toggle switch labeled "Standard ANTENNEX SA Settings." This option ensures that the spectrum analyzer functions according to the standard settings.

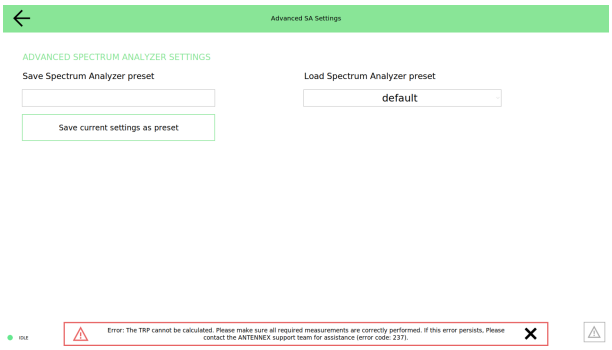

5. Choosing non-standard spectrum analyzer settings grants you the flexibility to customize the settings on the spectrum analyzer according to your specific preferences:
   a. Begin by configuring the spectrum analyzer parameters to match your measurement requirements. You can do this on the Spectrum Analyzer itself, without the use of the Reverberation Chamber.
   b. After configuring the spectrum analyzer, you can save these custom settings as a preset. To do this, press the “Save current settings as preset” button. You can now give a name for this preset. Provide a recognizable and descriptive name for the preset you've created. This allows you to easily identify and select the preset when needed.
   c. To load a previous saved preset, click on the drop-down menu under “Load Spectrum Analyzer preset”. You can choose the specific preset you want to use from the list of saved presets.
   d. If you want to revert to the standard preset, select “default” from the drop-down menu under “Load Spectrum Analyzer preset”.

Using the API

For the usage of the API we would like to refer to the dedicated API Manual.

Maintenance

Maintenance is crucial for both the longevity of your equipment and the accuracy of your measurements. This chapter outlines essential procedures to ensure your ANTENNEX product remains in top working condition.

- When replacing the DUT feedthrough panel, ensure it is clean and undamaged during installation to ensure proper electrical contact.
- The chamber requires an annual calibration, which must be performed by a certified technician.

Cleaning

- Ensure the device is powered off before cleaning to prevent electrical hazards and damage.
- The exterior can be wiped cleaned using a soft cloth slightly dampened with water or a screen cleaner. Avoid using chemicals like alcohol and antiseptic solutions, as they can cause gloss variation, tarnishing, and fading.
- Do not use thinner, benzine, wax, or abrasive cleaners, as these can damage the device's surface and components.
- Shielding fingers should be cleaned with a mild cleaning solution at least once a year.

Replacing the fuse

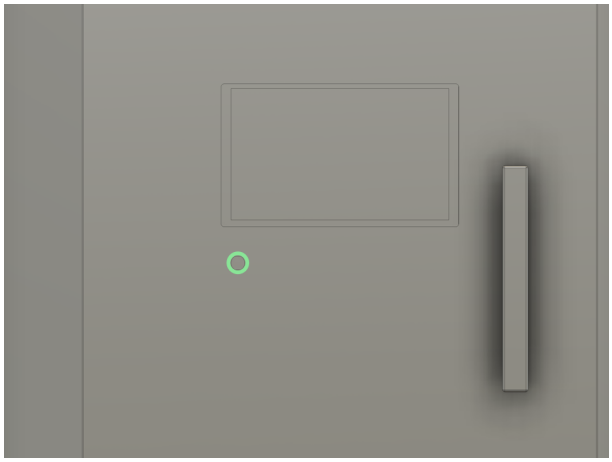

1. Power off the device, by pressing and holding the on/off switch for 3 seconds

2. Cut the main power by switching the main power switch

3. Remove the power cable from the main power inlet
4. Remove the protective cap holding the fuse in it's place
5. Remove the old fuse
6. Insert the new fuse with a rating of 2A and size Ø5 × 20 mm
7. Install the plastic fuse cover
8. Re-insert the power cable in the main power inlet
9. Turn on the main power switch
10. Power on the device, by pressing the on/off switch.

Problem solving

While using your reverberation chamber, you may come across various errors and warnings. This chapter is designed to provide you with insights and steps to effectively address common issues. You also have the option to conduct a self-test of the device's internal components and connections, accessible through the settings menu, which can help identify and resolve issues efficiently. If an error persists or if you need further assistance, please do not hesitate to contact our dedicated support team. Our goal is to ensure that your experience with our product is as smooth as possible and to assist you in overcoming any challenges you may encounter.

Software and User Interface

PROBLEM	SOLUTION
Connection Issues with Spectrum Analyzer	If the chamber cannot establish a connection with the spectrum analyzer, check that both the chamber and the spectrum analyzer are on the same network and have valid IP addresses. Ensure that the chamber's IP address is in the same subnet as the spectrum analyzer. Conduct a ping test for verification. If issues persist, reconnect the network cables and reset both devices.
LED Indicator Issues	If the on/off LED does not respond as expected, please refer to the following overview for its proper functionality: - **Orange**: The device is in standby mode, the main switch is on, and pressing the on/off button will start the system. - **Green (Blinking)**: The system is in the process of starting up. - **Green**: The system has successfully started up. - **Red**: The system is currently performing a measurement. Do not open the chamber door during this time. - **Red (Blinking)**: Indicates an error condition.

Warnings and errors

PROBLEM	SOLUTION
Temperature Sensor Error/Warning	In the event of an error or warning related to temperature sensors, reset the device, and ensure proper airflow while keeping the ventilation holes unobstructed.
Fatal Internal Errors	If you encounter fatal internal errors, reset the device.
Stirrer Warning/Error	For warnings or errors related to the stirrer, ensure there are no cables or objects obstructing its movement. Reset the device.
Ventilation Warning/Error	If you receive a ventilation-related warning or error, confirm there is adequate airflow with unblocked ventilation holes.

	Reset the device.
Spectrum Analyzer Connection Warning/Error	In cases where the spectrum analyzer is not found, check the IP addresses of both devices, and ensure they are correctly connected to the network. Reconnect the cables and reset both devices.
High-Frequency RF Electronics Overheating	Verify airflow and the condition of ventilation holes if you receive overheating warnings related to high-frequency RF electronics. Reset the device and allow it to cool afterward. Maintaining the correct environmental temperature is crucial.
Low-Frequency RF Electronics Overheating	Verify airflow and the condition of ventilation holes if you receive overheating warnings related to low-frequency RF electronics. Reset the device and allow it to cool afterward. Maintaining the correct environmental temperature is crucial.
High Input Power Level Warning/Error	If you encounter warnings or errors related to high input power levels from the spectrum analyzer, adjust the spectrum analyzer settings, and consider adding attenuators to the measurement system. Alternatively, lower the power level of the Device Under Test (DUT).
Internal Calibration Signal Warning/Error	If an error or warning indicates that the internal calibration signal cannot be measured, ensure the chamber door is securely closed, and minimize the presence of high-loss materials within the chamber, such as absorbent materials or plastics.
Open Door During Measurement	In case of a notification that the chamber door was opened during measurement, always keep the door closed during a measurement. It should remain closed for the duration of the measurement.
Internal Communication System Error/Warning	Reset the device in response to internal communication system errors or warnings.
Waveguide Calibration File Invalid	If you receive an error or warning about an invalid waveguide calibration file, ensure that the file for compensating waveguides between the chamber and the spectrum analyzer is in the correct format. Refer to the previous chapters in this manual for guidance.
Empty Chamber Calibration File Invalid	In the event of an error or warning regarding an invalid empty chamber calibration file, reload the file from the annual chamber calibration. If this doesn't resolve the issue, the chamber may require recalibration by a service technician.
DUT Calibration File Invalid	If you encounter an error or warning indicating an invalid DUT calibration file, perform the DUT calibration again.

Low-Point Calibration Warning	Warnings regarding a calibration file with a limited number of data points are generally not critical. However, it's important to note that this could lead to a reduction in measurement accuracy.

Measurement and Calibration

PROBLEM	SOLUTION
Unusual Measurement Results	If you encounter unexpected or unusual measurement results, it's essential to take a few key steps. First, ensure that the Device Under Test (DUT) is correctly placed, with a minimum distance of 10 cm from the chamber walls. Next, thoroughly check all connections to confirm their proper functioning. If you're measuring a different device than in the latest calibration, consider recalibrating the system to align with the new setup. Remember that introducing materials not accounted for during the initial calibration can lead to inaccurate results. Lastly, maintain an interference-free environment to ensure the integrity of your measurements.

Power

PROBLEM	SOLUTION
Device Does Not Power On	Verify if the main switch is in the "on" position. If the on/off LED does not illuminate, check the fuse; if it's blown, replace it. If the issue persists, contact support for further assistance.
Power Supply Problems	In the event of power supply issues, verify the power source, power cables, and connections. Ensure the power supply matches the device's requirements.

Safety and Damages

PROBLEM	SOLUTION
Overheating or Temperature-Related Issues	If you notice the chamber overheating or experiencing temperature-related problems, ensure proper ventilation and that there is no obstruction of airflow.
Physical Damage	Visible physical damage to the chamber can have a significant impact on the quality of your measurements and, in some cases, lead to hazardous situations. In the event of such damage, it is crucial to promptly contact our support

	team for a professional assessment and potential repairs. Damages may compromise the integrity of your measurements, and recalibration by a service technician is essential to restore accurate measurement capabilities and maintain measurement quality.
Safety Concerns	For any safety concerns, such as unusual odors, smoke, or electrical hazards, immediately power off the device and contact support or a qualified technician to address the issue.

Specifications

Description

This product is a reverberation chamber designed for testing electronic devices for EM radiation. Operating in the 20-140 GHz range, this closed chamber serves as a measurement device that companies will use to assess their electronics, chips, and antennas. Inside the chamber, an optional signal source is available for calibration, offering an output range of 0-90 GHz, with actual usage limited to 20-90 GHz. The chamber is intended for placement in laboratory environments, providing conditions akin to a typical office at room temperature. It is powered by a 230 V AC grid connection and can be controlled via PC using an Ethernet interface. Typical applications are in telecom and automotive, where companies can test their cell phones or radar systems for total radiated power.

Specifications

DESCRIPTION	SPECIFICATION (NOMINAL)	ADDITIONAL INFORMATION
Construction		Aluminum body
Length (external / internal)	846 mm (33.3”) / 800 mm (31.5”)	
Depth (external / internal)	803 mm (31.6”) / 528 mm (20.8”)	
Height (external / internal)	808 mm (31.8”) / 695 mm (27.4”)	501 mm (19.7”) to the tip of the pyramid in the ceiling
Volume (external / internal)	0.466 m^3 / 0.257 m^3	
Weight	55 kg (121 lbs.)	
Frequency range	20 – 140 GHz	Validated for this frequency range, could be used for a wider band
Operating voltage	110 – 230 V AC	Euro C13 connector
Power consumption	< 200 W	
DUT region	300 × 300 × 300 mm (11.8” x 11.8” x 11.8”)	Optimized region in the chamber for a phased array scan angle range of -60° to 60°
Connectivity ports	4x USB 3.0 2x RJ45 Ethernet 1x HDMI	 1x for connection to local measurement instrumentation 1x for remote control For external display
Display size	12” (Multi-touch)	
Display resolution	1920 × 1080 pixels	
Operating temperature	10 – 30 °C	
Operating humidity	20 – 80 % (non-condensing)	
Storage temperature	5 - 50 °C	

Packaging

1x Reverberation chamber
2x stirrers
1x AC cable
2x ethernet cable

ANTENNEX

info@antennex.tech | www.antennex.tech