ISWARD®

ISWARD Robotic Lawnmower

Original instructions

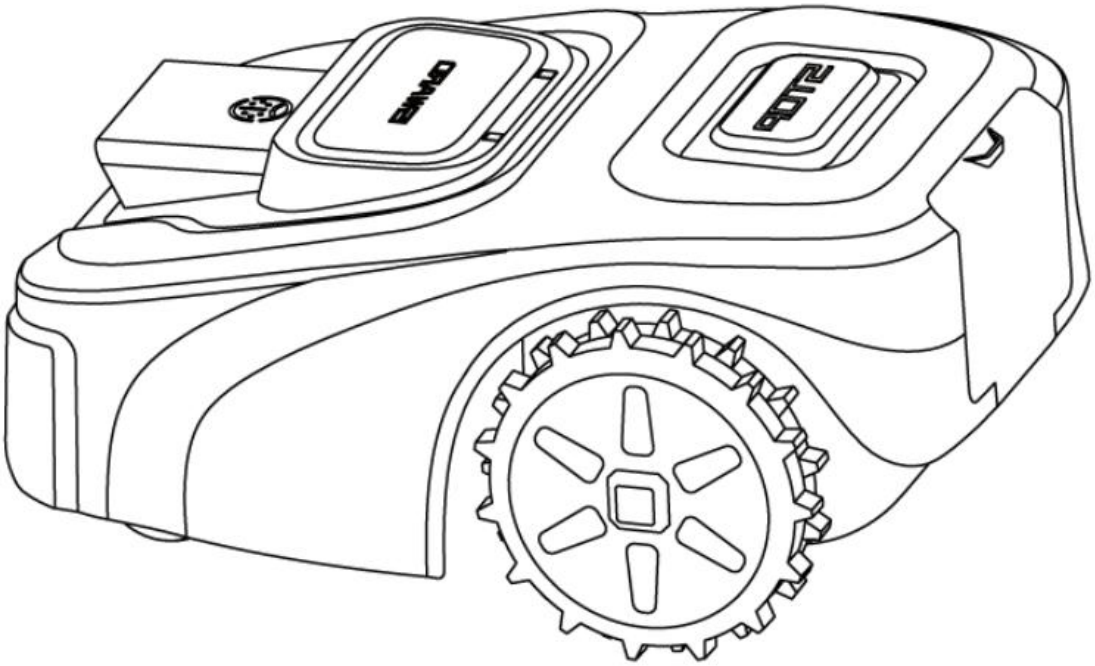

Version 2.1

Read the User Manual carefully before use. Make sure you understand all the instructions and safety warnings.

Welcome

Thank you for choosing iSward !

With Precise Integrated Navigation System (PINS) and superb traversing capabilities, iSward can handle lawns of all types. No perimeter wires needed and it's super easy to use, thanks to smart app connectivity and the intuitive control panel.

Collection of grass is not necessary because the fine grass clippings serve as a natural fertilizer. Enjoy the fun of carefree mowing and a perfectly maintained lawn.

Record your Product's Serial Number

You can Scan this OR code or enter the serial number bind your lawnmower.

【Label place】

NOTE:

This version of the manual is a draft page, and will continue to be modified and adjusted in the future, which says that the content iSward team has the final interpretation.

Table of Contents

1.iSward Overview - 4 -
1.1 Introduction - 4 -
1.2 Safety Warnings - 5 -
1.3 What's in the Box? - 7 -
1.4 Parts and Functions - 8 -
1.5 Symbols and Decals - 9 -
1.6 How the PINS Works - 10 -
1.7 Specifications - 12 -
2. Setup & Mapping - 13 -
2.1 Before You Start - 13 -
2.2 Install the Charging Station and the beacon - 14 -
Step 1: Find a good spot - 14 -
Step 2: Assembly and Install the charging station - 15 -
Step 3: Power the charging station - 16 -
Step 4: Install the RTK signal beacon - 16 -
Step 5: Check the satellite signal - 18 -
2.3 Charge and Activate the Lawnmower - 19 -
2.4 Paired RTK signal beacon - 21 -
2.5 Set up the Work Area - 22 -
Step 1: Map out the boundary - 23 -
Step 2: Set up off-limit island - 24 -
Step 3: Create a channel to connect separate areas - 25 -
Step 4: Set up the charging station - 25 -
Step 5: Finish setting - 26 -
2.6 Mowing setting - 26 -
2.7 Start mowing - 27 -
3. Daily Use - 27 -
3.1 Display and Control on the Lawnmower - 27 -
3.2 Light Cue - 30 -
The logo indicator light - 30 -
Charging station light cue - 31 -
RTK signal beacon light cue - 31 -
3.3 Mow - 31 -
How does iSward mow your lawn - 31 -
3.4 iSward app - 33 -
3.5 Notifications - 35 -
3.6 Record (APP) - 36 -
3.7 Settings (Lawnmower) - 36 -
How to set mowing schedule - 36 -
How to change the cutting height - 37 -
How to set the edge trimming - 37 -
How to edit the map - 38 -
Rain sensor - 38 -
Anti-theft - 38 -
How to reset PIN code - 39 -

How to unbind a lawnmower - 39 -
Firmware version - 39 -
3.8 Related Settings (app) - 40 -
3.9 Obstacle Avoidance - 40 -
4.Maintenance - 41 -
4.1 Cleaning - 41 -
4.2 Replace Blade assembly - 42 -
4.3 Transportation - 43 -
4.4 Battery - 44 -
4.5 Power Supply - 45 -
4.6 Storage - 45 -
4.7 Recycling and End-of-life Disposal - 46 -
4.8 Others - 46 -
5.FAQ and Troubleshooting - 46 -
6.Important Information - 51 -
6.1 Certifications - 51 -
6.2 FCC CAUTION - 52 -
6.3 ISED WARNING - 53 -
6.4 Limited Warranty - 53 -
6.4.1 Limited Warranty - 54 -
6.4.2 Limited Warranty Service Process - 54 -
6.4.3 Limited Warranty Eligibility - 55 -
6.4.4 Limited Warranty Exclusions - 55 -
6.4.5 LIABILITY DISCLAIMER AND LIMITATION - 56 -
6.5 About the Manual - 57 -
6.6 Contact Us - 57 -

1.iSward Overview

1.1 Introduction

iSward

ISWARD is an advanced robotic mowing system that uses a virtual boundary, eliminating the need for complicated perimeter wiring. Easy to operate and manage, iSward gives you more free time to do the things you love and an effortlessly impeccable lawn with every use.

iSward contains a robotic lawnmower, a charging station, and a RTK (Real - time kinematic) signal beacon. The robotic lawnmower and RTK signal beacon simultaneously receive positioning signals from satellites to locate the lawnmower and the work area. The charging station charges the lawnmower and transmits the satellite positioning signal received by the RTK signal beacon to the lawnmower to improve the positioning accuracy of the lawnmower.

The Lawnmower

The robotic lawnmower is powered by a lithium battery and can automatically cut grass in a defined work area. The work area can be defined by controlling the lawnmower through the iSward app as needed. When mowing, the lawnmower's driving path is automatically planned by the algorithm according to the shape of the work area to achieve the highest mowing efficiency. If the entire lawn cannot be completed at one time, the lawnmower will automatically return to the charging station to charge. When the lawnmower is charged, the mowing resumes from the position where it stopped.

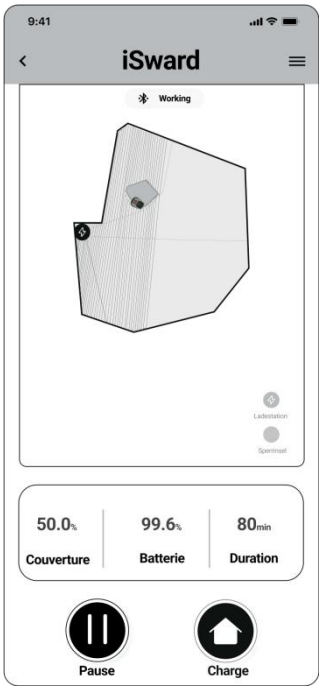

iSward app

The iSward app is an important part of the iSward system. You can follow the interactive guidance shown via the app to complete the installation and set up the work area. You can also use the app to adjust the settings of the lawnmower, manage the work area, view the work status of the lawnmower, control the lawnmower, etc. You can also get the latest and most comprehensive official Help and Support content through the app.

1.2 Safety Warnings

IMPORTANT

READ CAREFULLY BEFORE USE

KEEP FOR FUTURE REFERENCE

1) Be sure to install and operate the lawnmower and the charging station according to the instructions. Go to https://www.isward-tech.com/ for the complete User Manual and the latest user materials.
2) The product can be used both by consumers and for professional purposes. Using the lawnmower for purposes other than mowing can bring serious injury. To avoid risks of injuries, please read and understand all the warnings and cautions. Please understand that you can reduce the risk by following the instructions and warnings in this manual, but you cannot eliminate all risks.
3) The operator or user is responsible for accidents or hazards occurring to other people on their property.
4) iSward has many built-in safety sensors, however, safety risks still exist. Set a mowing time when there are no people or pets on the lawn. Inform the neighbors of the risks for accidents or hazards. When using the lawnmower on a public lawn, or when your lawn is open to your neighbor or street, protect or fence the lawn, or put up a warning sign around the working area that says: WARNING! Automatic lawn lawnmower! Keep away from the machine! Supervise children!
5) DO NOT modify the lawnmower by yourself. Modifications could interfere with lawnmower operations, result in serious injury and/or damage, or void the Limited Warranty. Use only iSward approved parts and accessories.
6) The manufacturer recommends the user to be 18–70 years old. Be sure to get the necessary training before operating the machine.

WARNING

Never allow children, person with reduced physical, sensory or mental capabilities or lack of experience and knowledge or people unfamiliar with these instructions to use the machine. Local regulations may restrict the age of the operator.

Before Mowing:

- Regularly check that all parts of the lawnmower can function normally.
- For the best mowing result, it is recommended to mow in dry weather. Mowing in the rain can make the grass stick on the product and the lawnmower may slip. DO NOT mow in bad weather, such as heavy rain, thunderstorms or snow.
- Periodically inspect the area where the machine is used and remove all stones, sticks, wires, bones and other foreign objects. The Limited Warranty does not cover damages caused by objects left on the lawn.
- To avoid possible damage, keep the operating lawnmower at least 1 m (3 feet) away from sprinkler heads. The lawnmower and sprinklers should NOT work simultaneously. Time the lawnmower so that it works at a different time from sprinklers.
- NEVER allow children to touch the power supply unit, charging station, blades, the battery compartment, or any parts with gaps such as the wheels.

WARNING

Never operate the machine and/or its peripherals with defective guards or shields, or if the cord is damaged or worn.

When Mowing:

- Keep away from the rotating blades! DO NOT put hands or feet under or near the rotating blades.
- Watch out for projectile objects! Keep a safe distance from the lawnmower when operating.
- DO NOT leave the machine to operate unattended if you know that there are pets, children or people in the vicinity.
- DO NOT overreach. Keep your balance at all times and always be sure of the footing on slopes. Walk, never run while operating the machine or its peripherals.

WARNING

- DO NOT allow children to be in the vicinity or play with the machine when it is operating.
- DO NOT lift the lawnmower in operation. DO NOT ride on the lawnmower.
- DO NOT mow on areas with slopes steeper than the maximum incline inside the working area (57%), as well as the boundary (10%).
- If the lawnmower makes an abnormal sound or signals an alarm, press the STOP button immediately.
- If there are abnormal vibrations, turn off the lawnmower, place it on level ground for about 30 seconds and then restart. If the issue persists, contact authorized after-sales service.
- DO NOT touch moving hazardous parts before they have come to a complete stop.

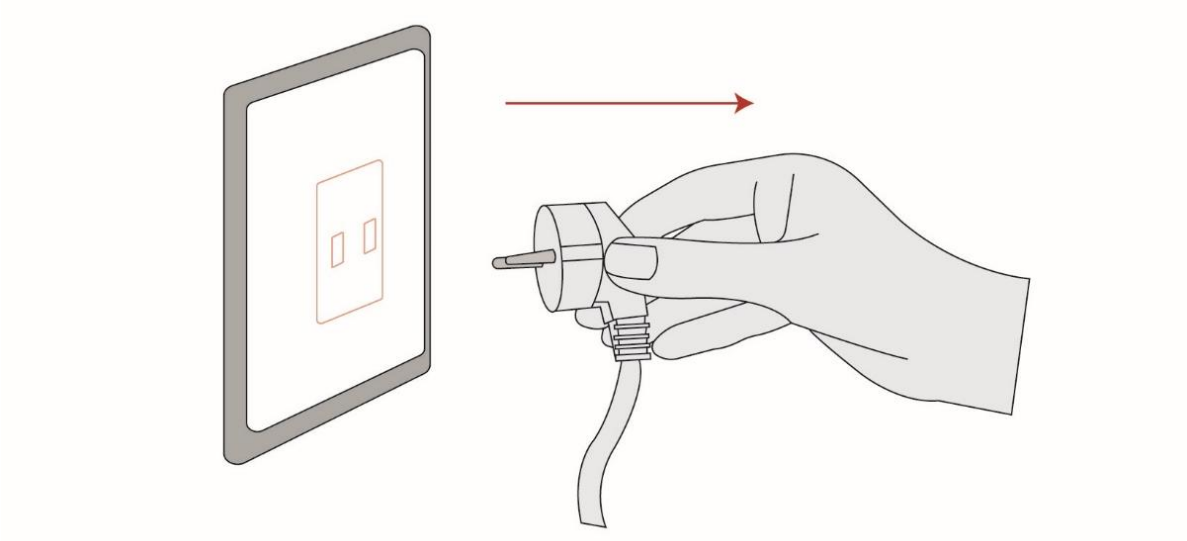

Safe Usage:

- DO NOT operate the lawnmower outside the temperature limit: -10℃ ~+60℃ (14–140° F), because low/high temperatures can decrease lawnmower performance and even lead to accidents.
- DO NOT place anything on the lawnmower or the charging station.
- It is recommended to conduct regular maintenance of the lawnmower by an adult.
- Regularly check the warning devices to ensure they are effective. These devices include the LED light on the charging station, and the buzzer, the indicator light on the lawnmower.
- Before charging, please read How to Charge in Chapter 2.3. Improper use may cause electric shock, overheating, or leakage of corrosive liquid.
- If the cord on the power supply or the extension cable becomes damaged or entangled during use, disconnect the power supply from the power socket and then untangle. To avoid a hazard, pull the body of the plug rather than the cord when separating the power supply from the power socket. Contact after-sales service and have a professional technician to repair or replace the cord.

WARNING for button cell or coin battery:

a) Remove and immediately recycle or dispose of used batteries according to local
b) regulations and keep away from children. Do NOT dispose of batteries in household trash or incinerate.
c) Even used batteries may cause severe injury or death.
d) Call a local poison control center for treatment information.
e) Battery type: CR1220.
f) Nominal voltage: 3.0 Vdc.
g) Non-rechargeable batteries are not to be recharged.
h) Do not force discharge, recharge, disassemble, heat above (manufacturer's specified temperature rating) or incinerate. Doing so may result in injury due to venting, leakage or explosion resulting in chemical burns."
i) The product contains non-replaceable button cell

1.3 What's in the Box?

If there are missing or defective parts, please contact after-sales service. We recommend retaining the package for future transportation and shipping.

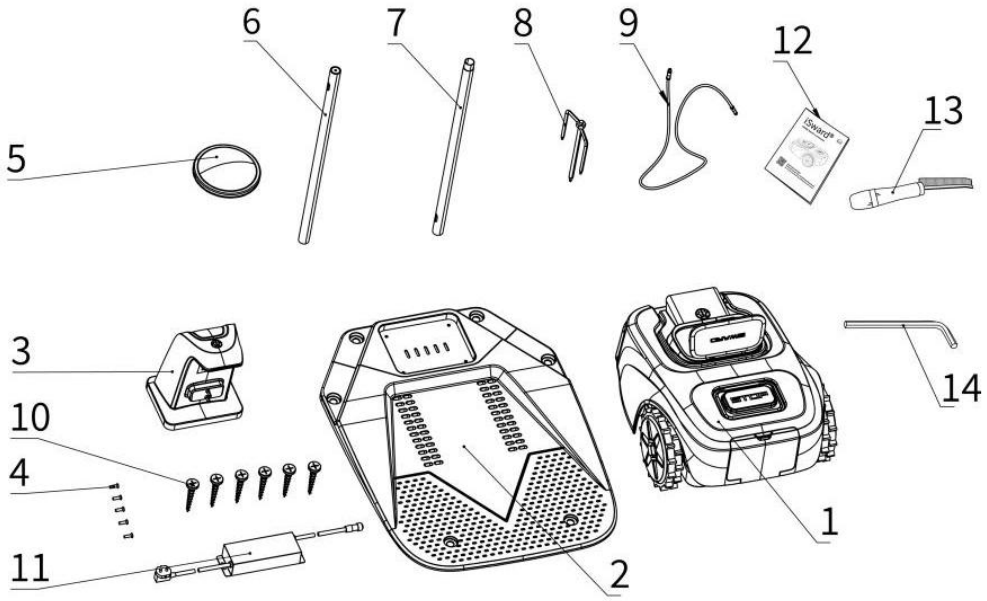

1. Lawnmower	2. Charging station base plate
3. Charging station panel	4. Screws
5. RTK signal beacon	6. Tube-A
7. Tube-B	8. Base fork
9. Bacon extension cable	10. Nails
11. Power supply	12. User Manual
13. Brush	14. Tool

1.4 Parts and Functions

Top view

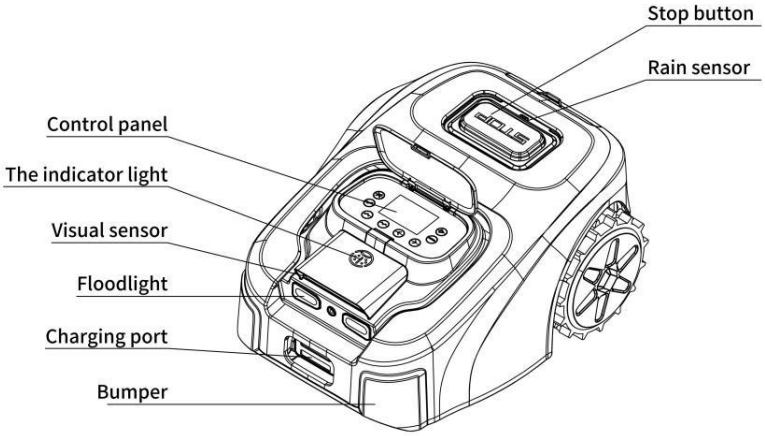

- **The indicator light**: iSward will have specific lighting effects to remind you to pay attention to the state of the lawnmower.
- **Stop button**: Stops the lawnmower and the blade immediately.
- **Control panel**: The buttons on the control panel can be used for the basic operations of the lawnmower: start mowing, return to the charging station, enter the PIN code to unlock the lawnmower, etc.
- **Rain sensor**: For raindrop detection.
- **Bumper**: When the bumper hits an obstacle and triggers the internal sensor, the lawnmower will go backward and avoid the obstacle.
- **Visual sensor**: Our models are equipped with Visual sensors, which could detect obstacles and avoid collision.
- **Floodlight**: When the outside light is weak, the lighting will provide illumination for the vision sensor.
- **Charging port**: The charging position of the machine.

Bottom view

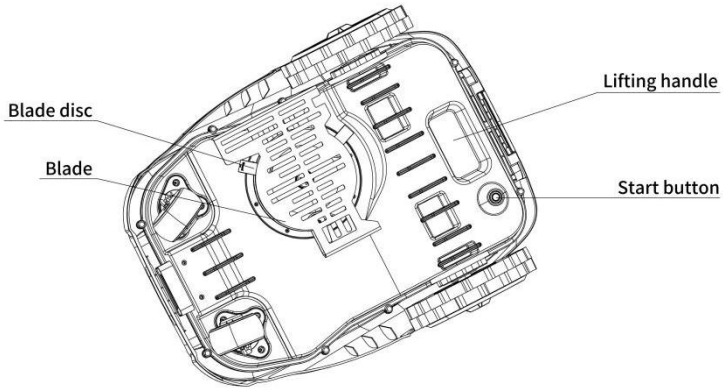

- **Blade:** The blades can rotate freely after being attached to the blade disc. When mowing, the spinning blade disc will generate centrifugal force to keep the blades pointing outside so that the blades can cut grass. When hitting an obstacle, the blade will turn inside.
- **Blade disc:** Blade disc height adjustment through iSward App.
- **Lifting handle:** Helps you lift the lawnmower when necessary.
- **Start button:** Switch the lawnmower on and off.

NOTE:

Never submerge the lawnmower in water, otherwise, the components may damage and the Limited Warranty will be voided.

Charging station and the RTK signal beacon

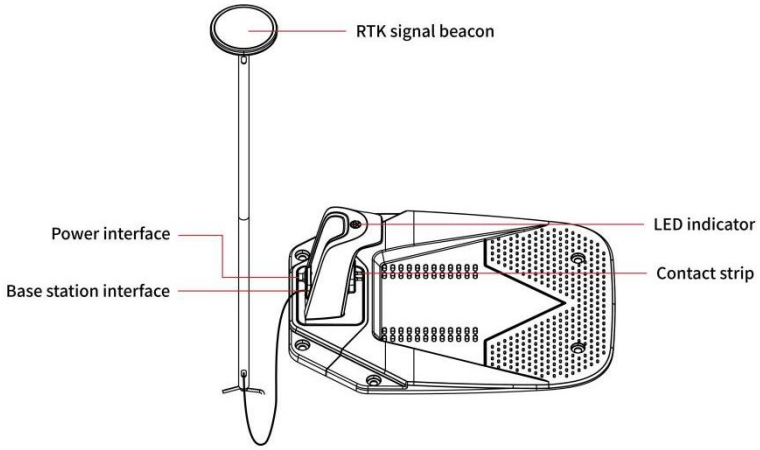

- **RTK signal beacon:** Receives satellite signals to improve the positioning accuracy of the lawnmower.
- **LED indicator:** Indicate different states with various colors.

NOTE: If the RTK signal beacon has poor signal due to surrounding buildings or trees, the lawnmower will not work properly. You need to find a better spot for the station.

1.5 Symbols and Decals

Please study the symbols on the product and labels carefully and understand their meaning:

WARNING-Read instruction manual before operating the machine.

WARNING-Do not touch rotating blade.

WARNING-Keep a safe distance from the machine when operating.

WARNING-Do not ride on the machine.

WARNING-Operate the disabling device before working on or lifting the machine*.
*The disabling device hereby refers to the PIN code. Make sure the lawnmower is locked by the PIN code before lifting or operating.

Class III appliance

WARNING-Li-Ion battery. This product has been marked with a symbol relating to separate collection for all battery packs and battery pack. It will then be recycled or dismantled in order to reduce the impact on the environment. Battery packs can be hazardous for the environment and for human health since they contain hazardous substances.

This product conforms to the applicable FCC Directives.

This product contains a button cell or coin battery.

IPX4 IPX4/Waterproof rating of the charging station.

IPX5 IPX5/Overall waterproofing rating.

1.6 How the PINS Works

PINS (Precise Integrated Navigation System) is iSward's unique high-precision fusion technology. Based on satellite positioning, PINS technology integrates various sensor data to improve positioning accuracy and fault tolerance through algorithm fusion.

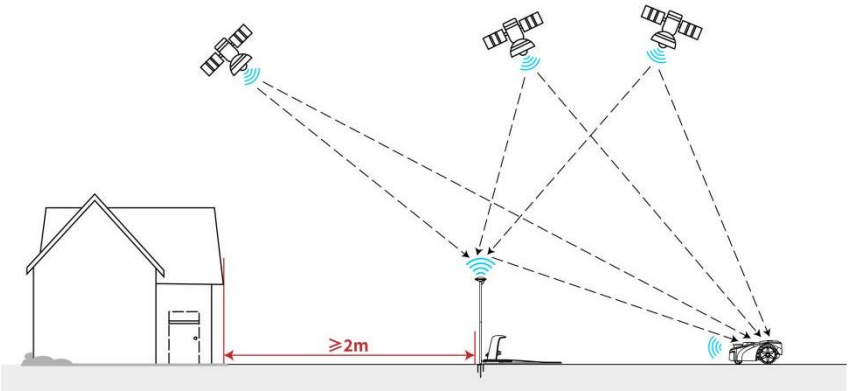

The lawnmower can locate itself through satellite signals, which can also be picked up by the beacon. By comparing the satellite signals from the beacon and the lawnmower, errors in the transmission of the signal (such as the offset of the satellite signal as it travels through the ionosphere) can be minimized, improving satellite positioning accuracy to the centimeter level.

In addition, the data collected by the gyroscope, accelerometer, etc can also be integrated into this system through iSward's data fusion algorithms, further improving the applicability of iSward to various environments.

With PINS technology, iSward can draw a precise work area in complex outdoor environments without laying boundary wires, and optimize the mowing path through algorithms in the work area to achieve planned mowing results and maximize the lawnmower's work efficiency.

Multi-sensor data fusion improves the applicability of PINS to complex environments, but serious satellite signal issues will still greatly affect the normal operation of iSward. Below are major cases of satellite signal issues:

- **Blocking**

If there are any obstacles on or surrounding the beacon and/or the lawnmower, the signal will be weakened or blocked.

Solution: DO NOT install the charging station and beacon under a roof, tree or anywhere that may block the signal.

- **Signal Interference**

Signals from the satellite are transmitted to the beacon after being reflected by the wall, instead of directly from the sky. This is called Multipath Effect.

Suggest: It is recommended not to use the lawnmower in a scenario with walls that have long and flat surfaces or that are made of glass or metal. The long and flat surface/glass and metal surface will interfere with the signal, hence the lawnmower may bump into the walls. The map should not be built between two high walls, because the walls will block the signal and the lawnmower will not be able to work in this area.

Some environments that cannot be installed:

- The lawn has a long and narrow area with high walls on both sides.

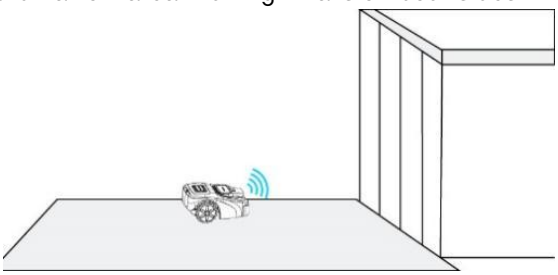

- There is a large area of a glass/metal wall or a wall with a long and flat surface.

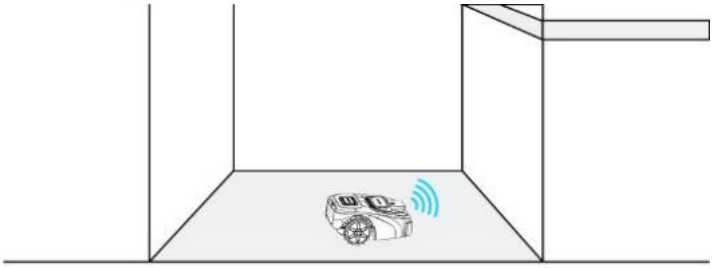

- There are tall trees (usually above 5 m) with big tree crowns.

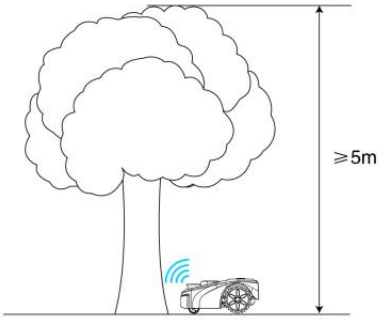

- The density of the trees is thick.

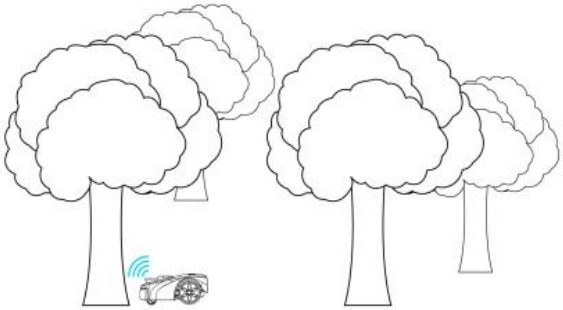

1.7 Specifications

		G10	G20	G30
Basic Information	Brand	iSward		
	Dimensions: Length × Width × Height	560mm*450mm*250mm(22*17.72*9.8in)		
	Net Weight (Battery Included)	13kg		
	Material	Lawnmower frame: ABS; cover: PC+ASA		
Lawnmower Parameters	Recommended Mowing Area	1000 ㎡ (0.25 acre)	2000 ㎡ (0.49 acre)	3000 ㎡ (0.74 acre)
	Typical Mowing Time Per Full Charge①	About 220min		
	Cutting Width	19.6cm		23.5cm
	Cutting Heigh	3-6cm (1.2–2.4 in)		
	Charging Time	About 100min		
Working Conditions	Working Temperature	-10℃ ~ +60℃		
	Storage Temperature	-20℃ ~ +45℃		
	IP Rating	Lawnmower body IPX5; charging station IPX4; power supply IP65		
	Max. Incline Inside Working Area	57%（30°）		
	Max. Incline at Boundary	10%（5.5°）		
Driving Motor	Rated Speed	0.4m/s		
	Motor Type	Brushless motor		
Blade Motor	Rated Speed	2950r/min		2200r/min
	Motor Type	Brushless motor		
Cutting blade	Type	G10-45		
	Manufacturer	Dongguan Hua Jiari tools Co., LTD		
Battery Pack	Battery Type	Rechargeable LiFePO4 battery		
	Nominal Voltage	22.4V		
	Nominal Capacity/Energy	6Ah/134.4Wh		
	Battery Management System	Over-heating, short circuit, over-current and over-charge protection		
Power Supply	Type	FY2804000		
	Input	100-240VAC, 50/60 Hz, 1.5A Max		
	Output Voltage	28VDC		
	Output Current	4A		
Charging Station	Type	FY2804000		
	Input	100-240VAC, 50/60 Hz, 1.5A Max		
	Output Voltage	28VDC		
	Output Current	4A		
	Type	FY2804000		
	Input	100-240VAC, 50/60 Hz, 1.5A Max		
Other Features	Front Wheel	Omni-directional wheel		
	Rear Wheel	Brushless DC motor drive		

	Sensors	IMU Sensor, Obstruction Sensor, Lift Sensor, Rain Sensor, Wheel Encoder, Vision sensor, Temperature Sensor, Rollover Sensor		
Serve	Number of maps that can be saved	Two	Three	Four
	Storage time of cloud platform data	1 year	2 years	3 years

①Tested at a standard cutting speed with a full battery at an ambient temperature of 25° C (77° F) while mowing a flat lawn. The product can mow more per hour on open areas than on separated small lawns. When the grass is wet or long, the working capacity is also smaller. The flatter the lawn surface, the larger the working capacity.

2. Setup & Mapping

2.1 Before You Start

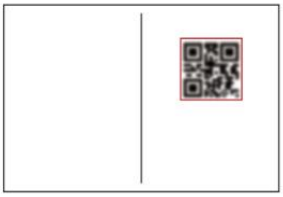

Prepare the app

To ensure a successful setup, please scan the QR code to download the iSward app. After installing the app, please register and log in.

You can find the QR code and ID number on page one of the manual.

NOTE:

During use, the app will ask you for Bluetooth, GPS positioning, and Wi-Fi networking or 4G on your phone accesses when necessary. To ensure normal use, it is recommended that you enable the above accesses. For more information, please refer to our Manuals.

Go to My>Manuals.

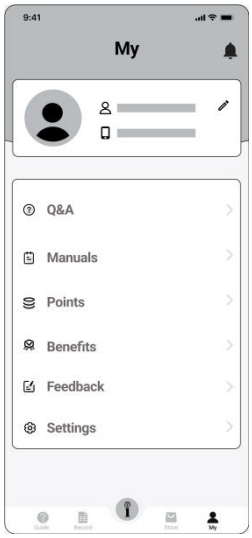

Prepare the lawn

Remove debris, piles of leaves, toys, wires, stones and other obstacles. Make sure children and pets are off the lawn. Please cut your lawn to a height of no more than 6 cm.

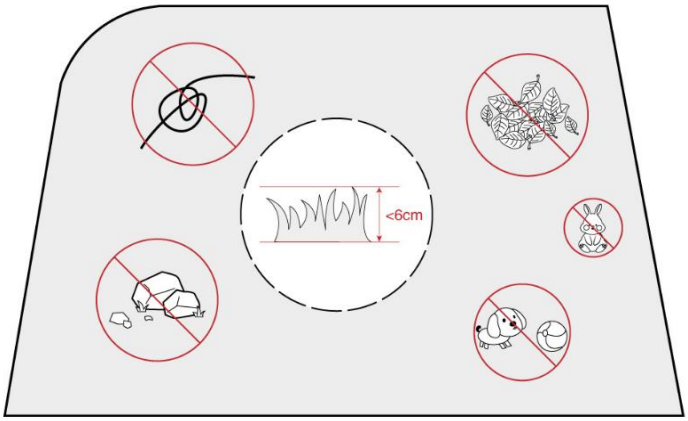

2.2 Install the Charging Station and the beacon

Step 1: Find a good spot

Install the charging station on a soft and flat surface.
When placed outside, the charging station and the lawn should be kept at the same level.

In order to ensure that the beacon can receive good satellite signals, please choose a suitable location to install the charging station and the beacon:
1. Remain a certain distance away (greater than 2 m) from houses, trees and walls.
2. Install the charging station and beacon in an open space with nothing blocking the signal (for example, the tree canopy or the sunshade umbrella), where the beacon has a clear sky view that at least 110° of the sky is unobstructed.
3. Please place the charging station on a flat non-hardened ground with the beacon upright. Do not install the beacon at an angle.
4. To ensure smooth docking, leave a minimum of 10 cm at the back of the charging station and 1 m at the front.
5. Stay away from sprinkler heads, fountains or other outdoor water systems.
6. Stay away from substations, generators, water pump stations and air conditioners.

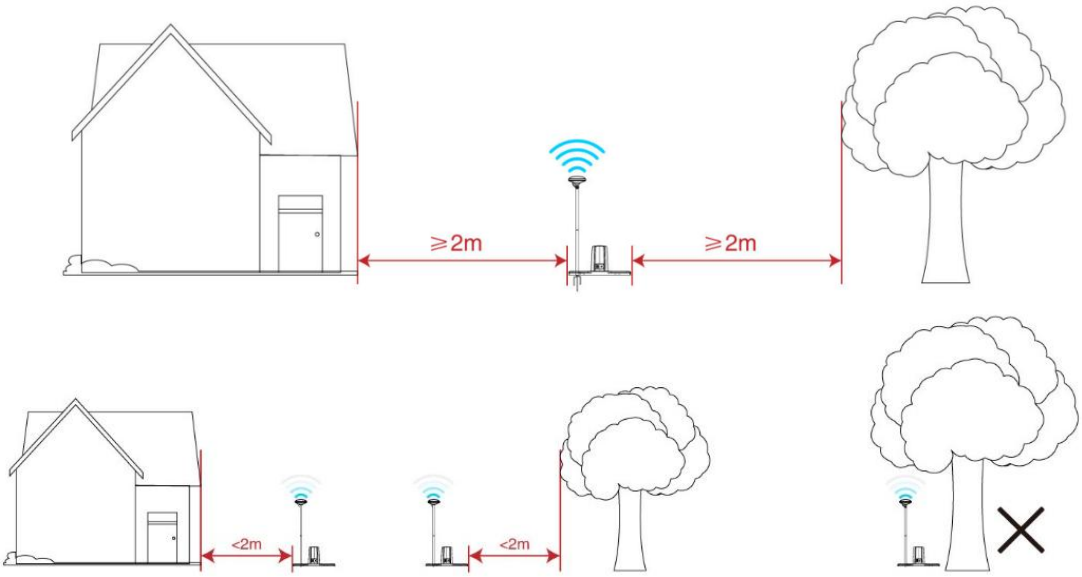

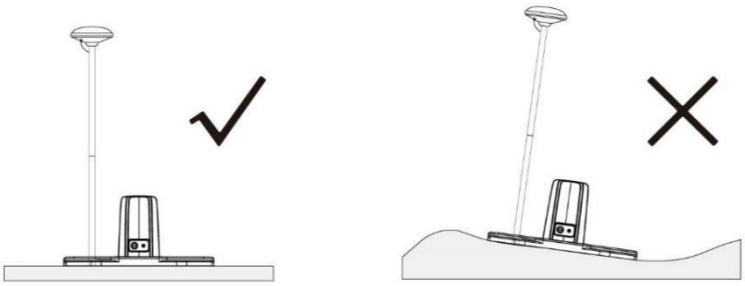

Please choose the location carefully. Once the map is saved, if the location of the RTK signal beacon is changed, you need to create a new map.

Step 2: Assembly and Install the charging station

1. Insert the charging station panel into the installation position of the charging station base plate.

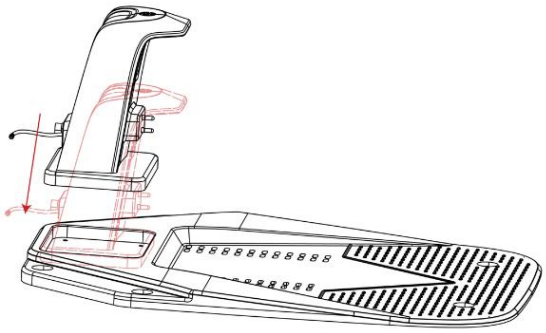

2. Place the charging station upside down on the soft ground.

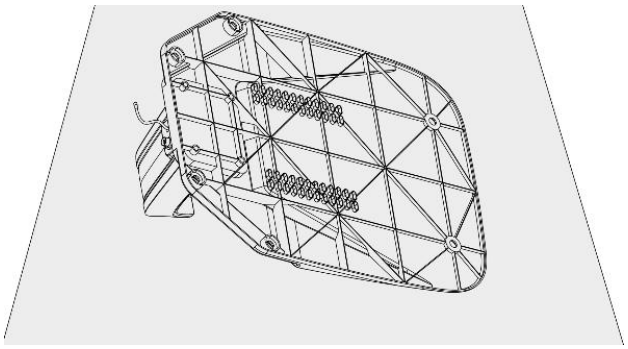

3. Use a Phillips screwdriver to secure the charging station panel and base plate.

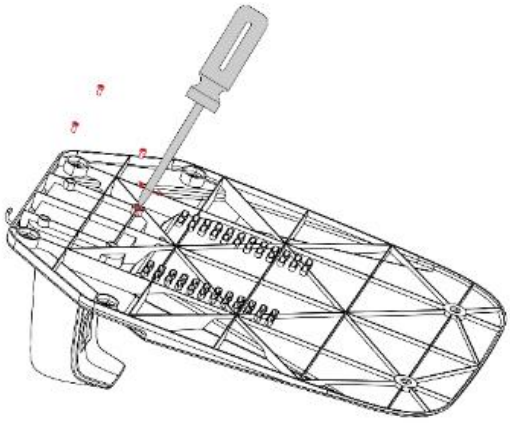

4. Fix the charging station

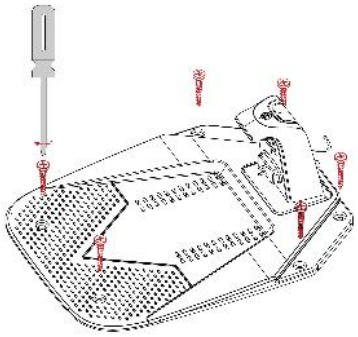

NOTE:
The side of the charging station panel with the indicator light should face to the lawn work area.

Step 3: Power the charging station

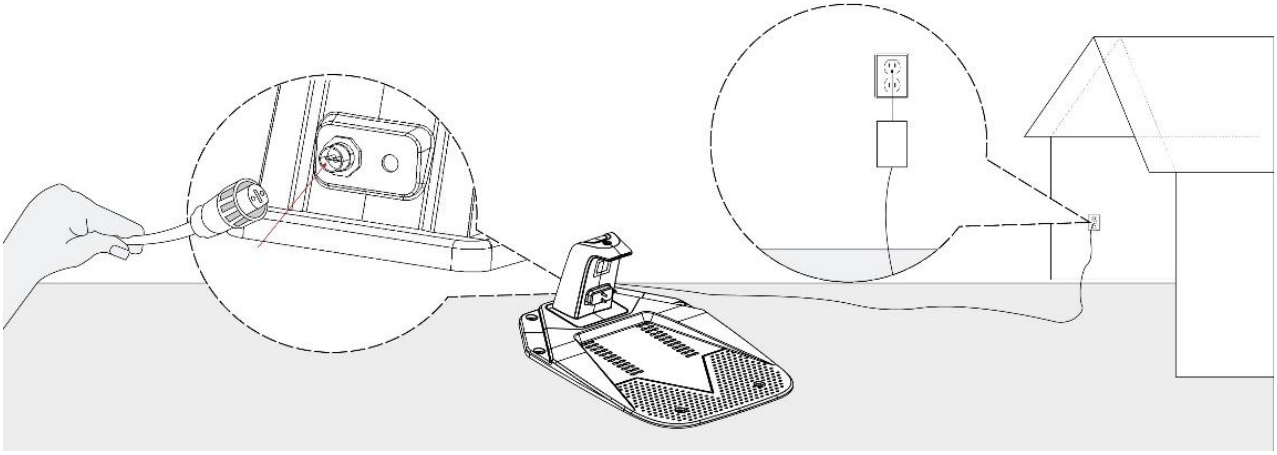

NOTE:
The indicator light will turn red when the charging station is powered.

Step 4: Install the RTK signal beacon

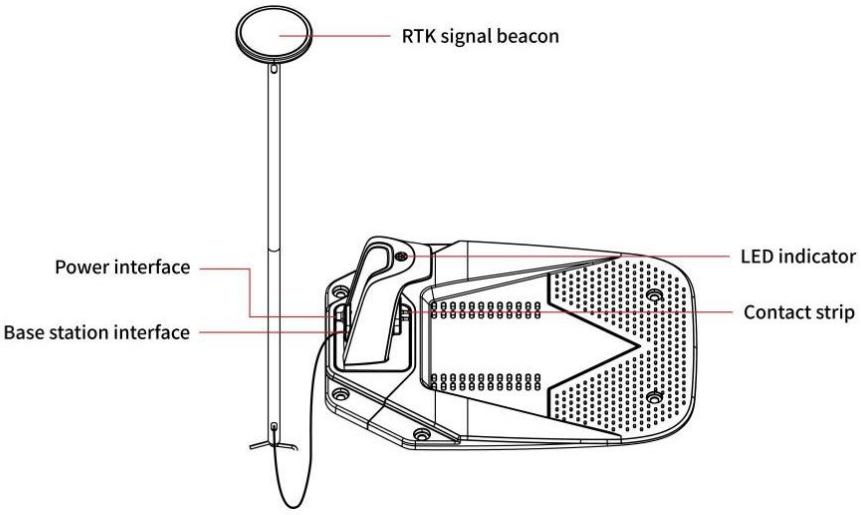

Caution: The illustrations in this user manual are for your reference only. The beacon assembly metal tube is installed next to the charging station.

1. Rotate the RTK signal beacon on the tube.

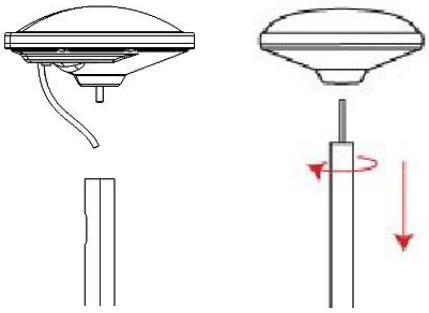

2. Thread the wire of RTK signal beacon through the side hole of the tube-A and out the other end along the tube-A.

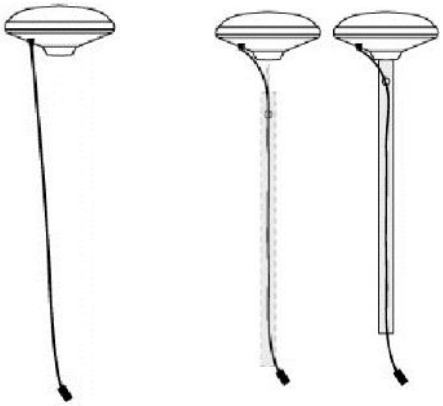

3. Thread the extension cable through the side hole of the other extension tube and out the other end along the tube-B.

4. Connect the extension cable and the wire of the RTK signal beacon.

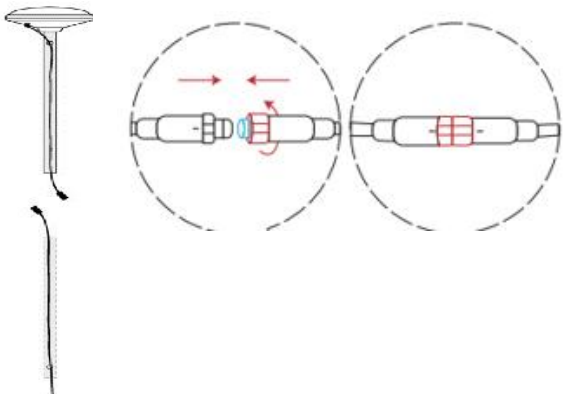

5. Rotate the tube-A and the tube-B.

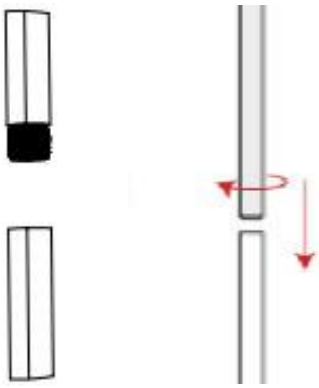

6. Unfold the base fork and insert it into the ground.

To make sure that the RTK signal beacon can be stably connected to the charging station once the installation is completed, please fully insert the base fork into the ground.

7. Rotate the tube-B onto the base fork.

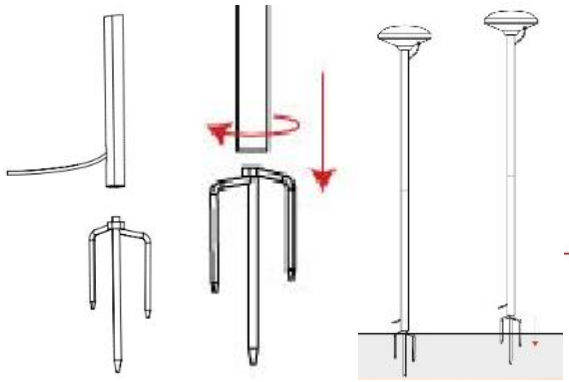

8. Connect the RTK signal beacon to the charging station.

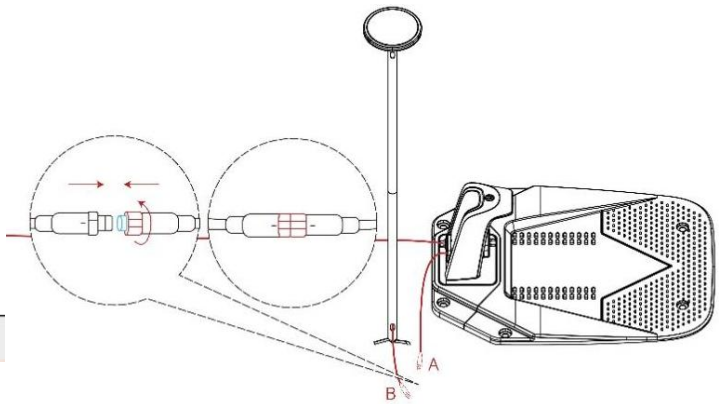

NOTE:

- Secure the nuts tightly to prevent water from entering them.
- Align the notch on the extension cable (A) with the groove on the power supply connector (B).

9. Tie up the excess strands with cable ties.

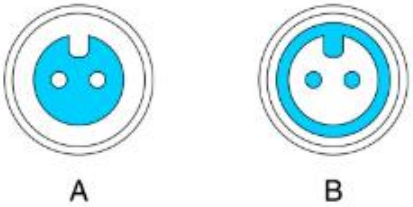

NOTE：

To ensure satellite signal, DO NOT put anything on the beacon.

Step 5: Check the satellite signal

Solid blue	Normal power supply
Press the button three times, the blue indicator is steady on for 3S, switch to fast blinking state.	Start calibration position
Waiting for 1min, the blue indicator blinks slowly.	Finish calibration position

If there are no slow flashes, you should power off the RTK signal beacon and restart the above steps until the blue indicator blinks slowly.
Finish calibration position.

NOTE:
To avoid performance degradation, always keep the connectors, accessories, connection part of the charging station and beacon away from any dirt or mud. Never allow water to get into the connectors or any parts and connection points.

2.3 Charge and Activate the Lawnmower

How to charge

How to charge for the first time:

A new lawnmower may have a low battery after long storage. Fully charge the lawnmower before the first use. Place the lawnmower in the charging station. Make sure the charging strip on the lawnmower and the contact strip on the charging station are in good contact.

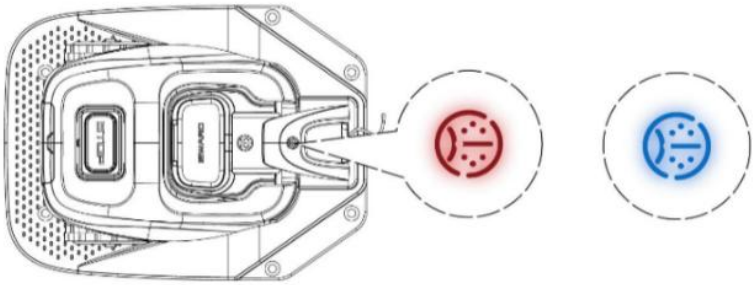

Solid red	● No connection between the charging station and the lawnmower. ● The lawnmower might be powered off.
Flashing blue	● The lawnmower is charging.
Solid blue	● The lawnmower is fully charged.
Flashing red	● Malfunction. Please contact after—sales service.

Automatic charging:

After setting up the virtual boundary, the lawnmower will return to the charging station automatically when the mowing task is completed， or when the battery is low. During the mowing session, you can press the HOME and then OK button to command the lawnmower to go back to the charging station.

Where to place the power supply:

- Protection from direct sunlight and rain
- Indoors with good ventilation
- Keep it at least 30 cm (12 in) above the floor to avoid possible damages caused by water.

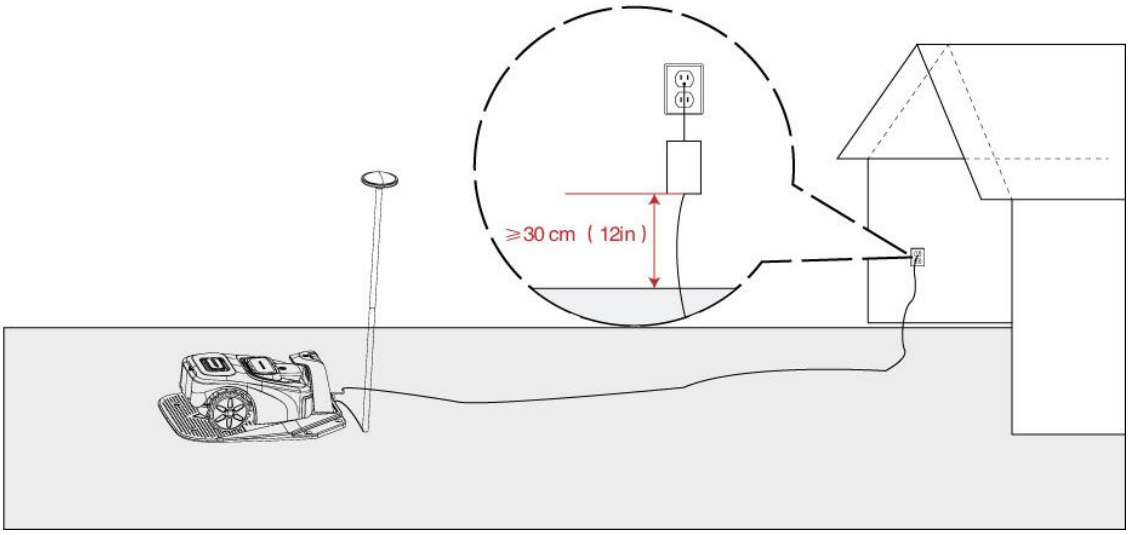

WARNING

- DO NOT charge if the lawnmower, the power supply, the charging station, or the power socket is damaged.
- DO NOT charge the lawnmower when the temperature is above 40℃(104° F)or below4℃(39.2°F). The battery has built-in temperature protection and will not charge if the limit is exceeded.
- When there is an abnormal smell, sound or light display, stop charging immediately and contact after-sales service.
- Keep away from inflammable and explosive materials when charging.

Activate the lawnmower

1、Press the start button under the machine. Make sure the lawnmower activate.

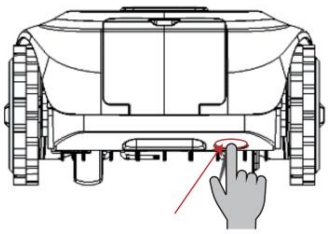

Please wait about 1min until you hear "Beep!!!".

2、Enable Mobile location, Bluetooth, 4G on your phone, log in to the app and follow the instructions to pair with the lawnmower.

Step 1: Add the lawnmower

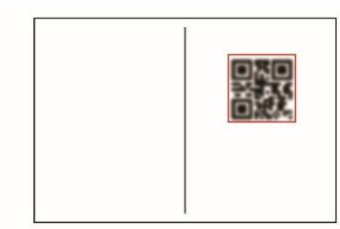

- Follow the instructions in the app and scan the QR code (or input the serial number) to add the lawnmower.

NOTE: You can find the QR code and ID number on page one of the manual.

- Then you need to name your lawnmower.

Step2：Activate your lawnmower

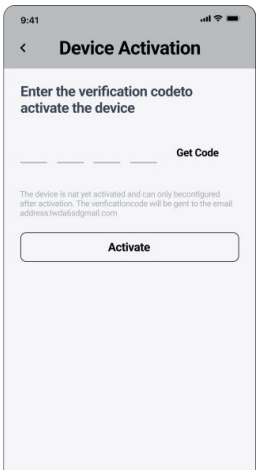

- Tap your lawnmower, then you can activate your lawnmower.

Follow the instructions in the app and enter the verification code to active the device.

Step 3：Pair with the lawnmower

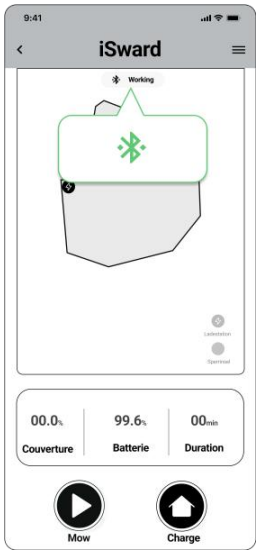

- Tap your lawnmower to go to the device home page, and then the APP will start searching for lawnmower and automatically connect.
- When you see the Bluetooth logo at the top of the interface, it means that the device has been successfully connected.

NOTE：

You should enable Mobile location, Bluetooth, 4G on your phone or WIFI, log in to the app.

2.4 Paired RTK signal beacon

Follow the instructions in the app and scan the QR code (or input the serial number) to connect the RTK beacon.

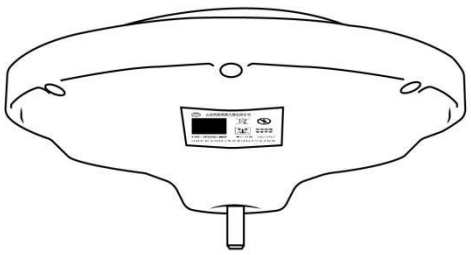

NOTE:

You can find the QR code and serial number on the RTK signal beacon.

Just go to i**Sward Settings>Beacon Paring**, tap" Scan Barcode to Pair".

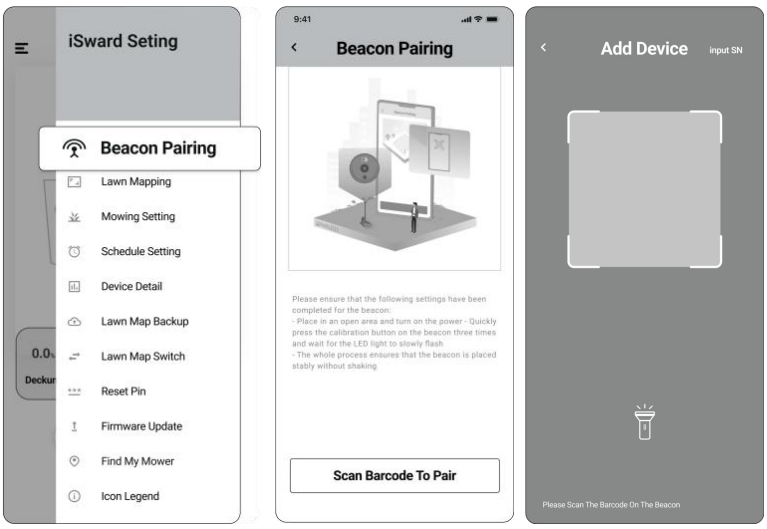

2.5 Set up the Work Area

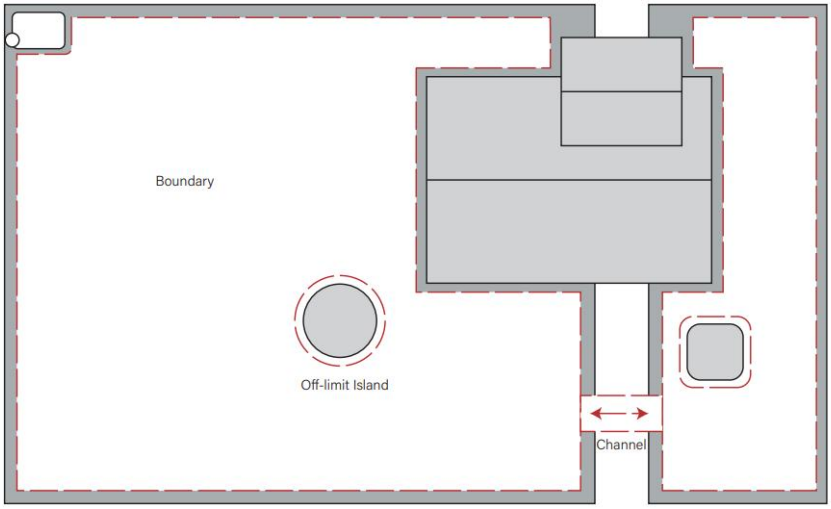

Follow the instructions in the app and control the lawnmower to create the work area (referred to as the map in the manual). The lawnmower will intelligently decide its moving pattern within the map.

- The work area consists of Boundary, Off-limit Island and Channels.
- Boundaries delineate one single complete work area, Off-limit Islands delineate areas where the lawnmower is prohibited, and Channels are used to connect multiple work areas.
- Inside the Channel, the lawnmower will just pass through without cutting the grass.
- The charging station and the RTK signal beacon should be installed outside the work area. And the distance between the charging station and the nearest working area boundary should be about 1m. If the charging station is inside the work area, the changing station will be treated as off-limit island so that the lawnmower won't be able to go home and charge.

NOTES:

- If the location of the charging station or RTK signal beacon is changed, the existing map CANNOT be used anymore and you MUST create a new map.
- Make sure your phone and lawnmower are fully charged before mapping. Mapping will only start when the lawnmower battery power level is sufficient.

Step 1: Map out the boundary

1、Make sure the lawnmower is powered on. With Bluetooth connection, your phone will connect to the lawnmower automatically.

NOTE:
If the lawnmower is in lock status, you must enter the PIN code before operating the lawnmower. The default code is ^ ^ ^ ^ and can be reset via the iSward app.

2、Just go to **iSward Settings>Lawn Mapping** , tap "+"in top right corner and name your lawn.
Then tap "+" in top right corner and tap "**lawn**" to Map out the boundary.

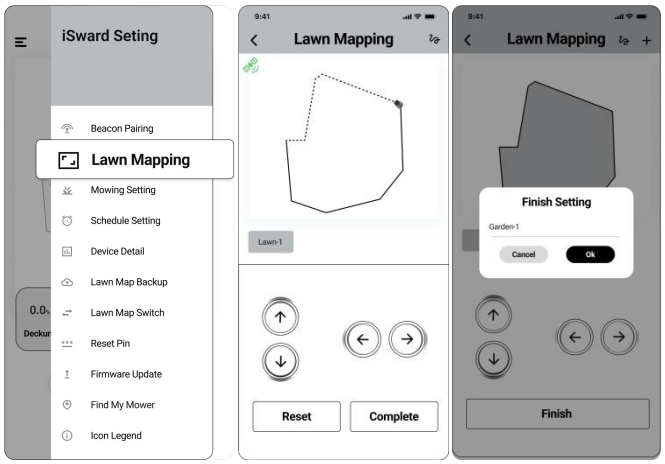

3、Find a proper starting point along the edge of your lawn (20 cm between the lawnmower's left side and the edge). Keep within 5m from the lawnmower during the mapping process.

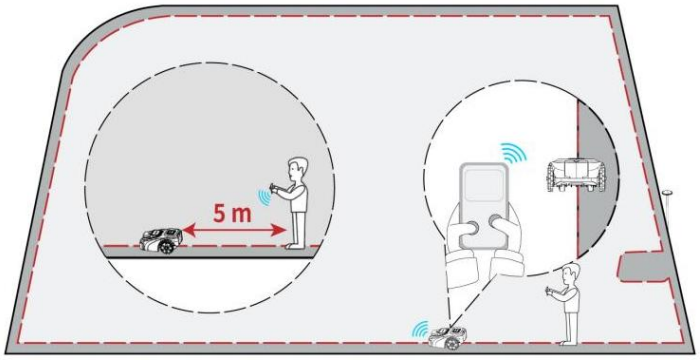

4、Walk along the edge.

- Distance from the edge: always keep 20 cm.

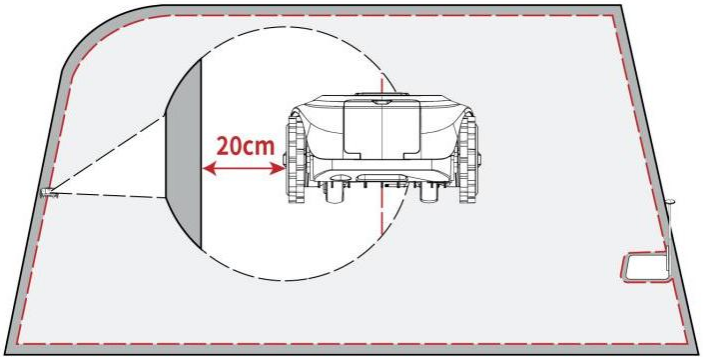

- **Slope:** Even though the lawnmower can traverse slopes up to 57% within the lawn, make sure the slope along the edge does not exceed 10%

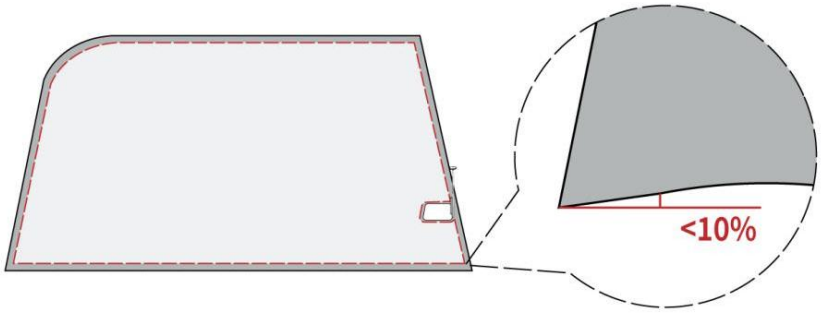

5、Go back to the starting point to finish the boundary mapping.

NOTE:

- If there is a sudden interruption and failure, follow the instructions in the app to continue or restart.
- If you have multiple separate lawns, please repeat this step.
- The charging station should be located outside the boundary, but should be close to the boundary.

Step 2: Set up off-limit island

When the lawnmower sees a hard obstacle taller than 10 cm (such as big rocks or a tree trunk), it will change the direction automatically. However, you need to lay borders for objects that need protection or areas you don't want the lawnmower to enter, e.g., a flowerbed, small trees, lawn decorations, pond, sprinkler heads, emerged roots, etc. If you recently installed a trampoline or grill on the lawn, you can also set an off-limit island to protect it.

How: Just go to **iSward Settings>Lawn Mapping**, tap **"+"** in top right corner and name off-limit island. Then walk along the edge of the off-limit island.

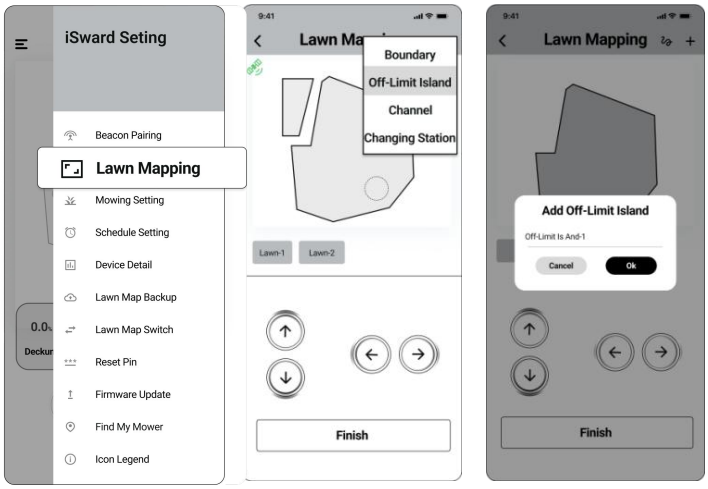

- If you have multiple off-limit islands, please repeat this step.

When you need to cancel the area (like when you remove the trampoline from the lawn), just delete it via the app.

NOTE:

Make smooth turning angles when setting the islands. You also need to walk along the edge when setting the island.

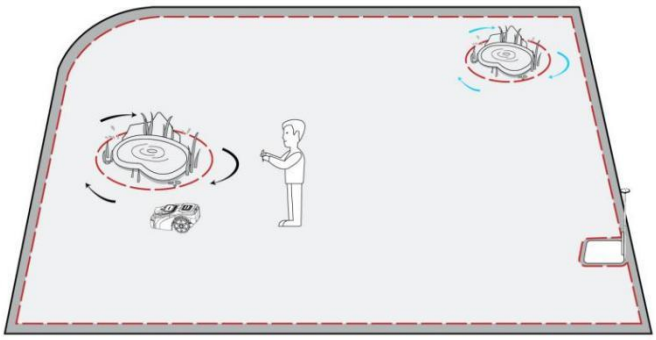

Step 3: Create a channel to connect separate areas

Following the instructions in the app, create a channel between separate boundaries.

How: Just go to **iSward Settings>Lawn Mapping**, tap **"+"** in top right corner and name the channel.

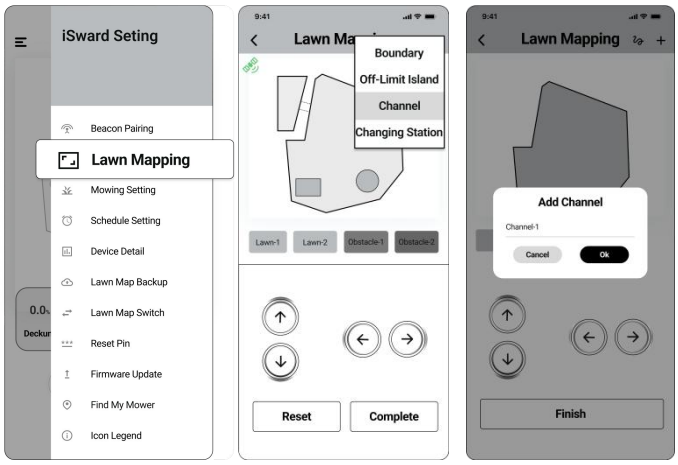

Then Operate the lawnmower to walk from one lawn to another.

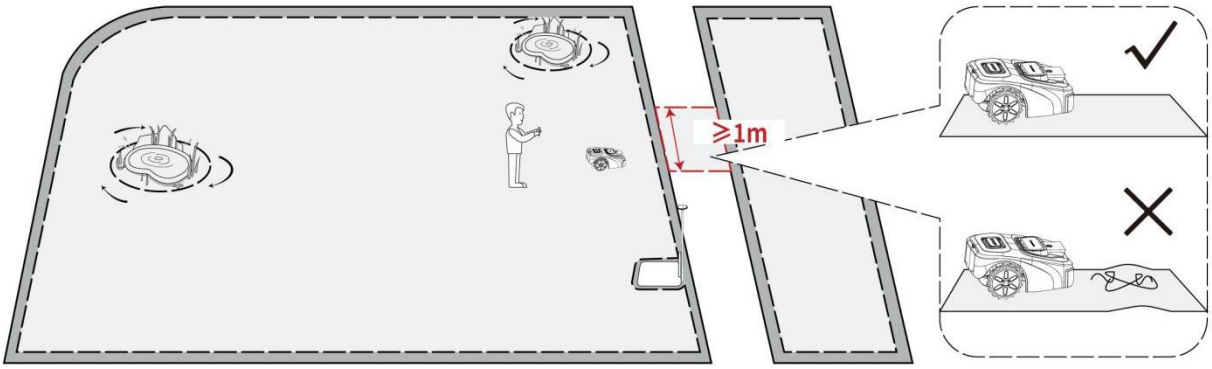

NOTE:

When creating a channel:

- Do not choose ground that is bumpy, muddy, or wet.
- The width of the channel needs to be greater than 1 m. In order to ensure smooth passage, when establishing the channel, please drive along the center line of the passable area. Being too close to the edge may scratch the lawnmower during work.
- The starting point and the end point should be set in the two map areas drawn respectively.
- The lawnmower cutter stops running and rises to the highest position.

Step 4: Set up the charging station

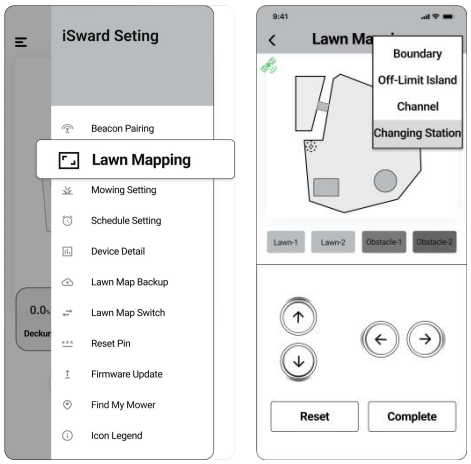

You should set up the charging station so that the lawnmower can automatically find the charging station to charge.

How:

Just go to **iSward Settings>Lawn Mapping**, tap **"+"**in top right corner and tap **"the charging station"**.

Then drive your lawnmower about 0.5 meter in front of the charging station.

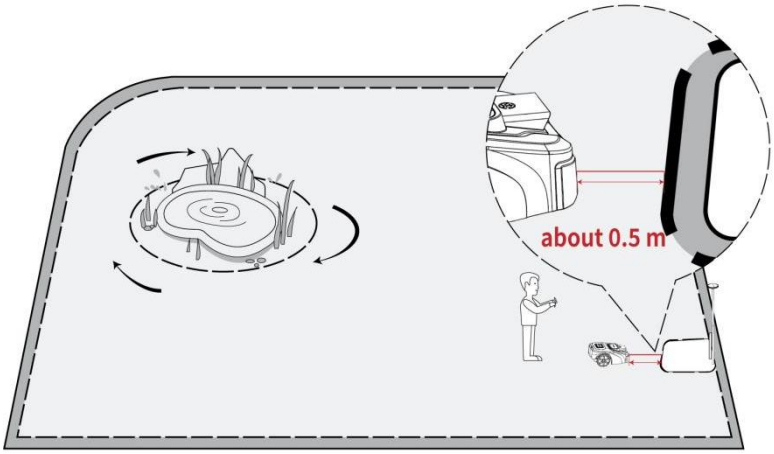

Tap" Add dock point" add the charge location.

Note:

When your lawnmower is low on power or needs to return to the charging station, themachine will return to the docking point.

Your lawnmower will automatically identify and return to the charging station at thedocking point, and then charge back to the station.

Step 5: Finish setting

Tap" **Finish Setting**" and name the work area.

2.6 Mowing setting

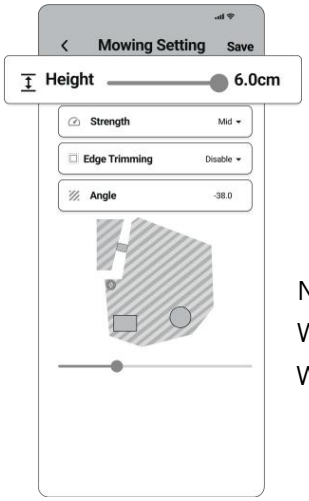

- After saving the work area, tap the icon on top right corner in the app then you can set Grass cutting height, mowing speed, edge trimming and the angle of mowing.

NOTE:

When you first use this device, please set the grass cutting height to the highest. When the lawn has been mowed once, gradually lower the grass cutting height.

2.7 Start mowing

On the lawnmower, enter the PIN code to unlock the lawnmower.
Then press **MOW** and then **OK** to start mowing.

You need to keep an eye on the satellite signals.
How：
Tap "**iSward Setting >Lawn Mapping**", you can see a satellite icon at the top-left corner.

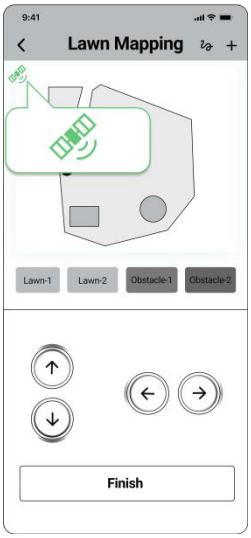

NOTE:
If the lawnmower goes beyond the boundary, make sure the satellite signal is strong at the problematic spot. The lawnmower and the RTK signal beacon need to see satellites to have accurate positioning. You can try to relocate the charging station, set the map again, and then test one more time. Get help from professional technicians when necessary. Contact your nearest dealer to solve problems. You can also send an email to our after-sales service.

3. Daily Use

3.1 Display and Control on the Lawnmower

The display shows various states of the lawnmower, and the control buttons can be used for the basic operations: start mowing, return to the charging station, enter the PIN code to unlock the machine, etc.

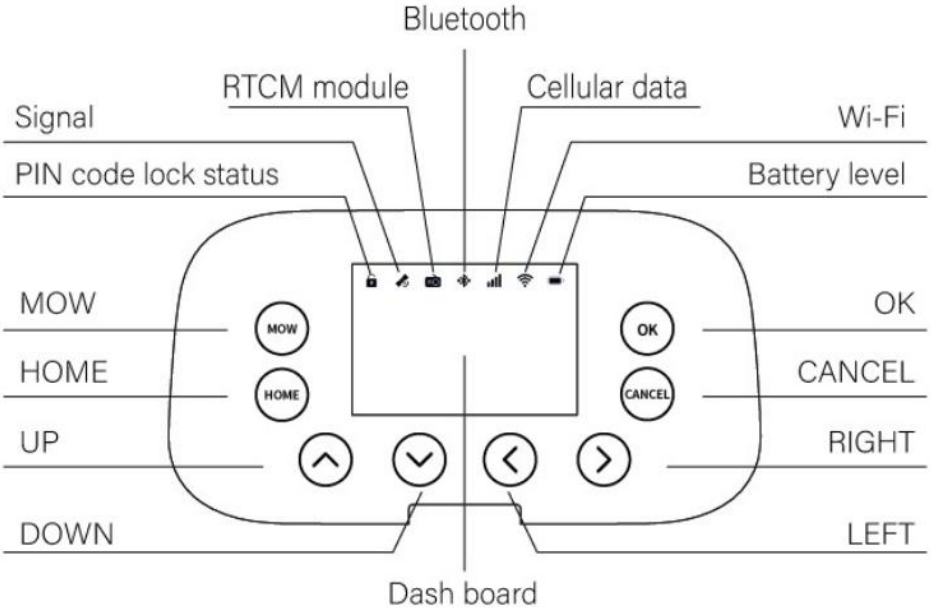

Display

MOW	Trigger the robot to start working normally
HOME	Trigger the robot to return the charging station
CANCEL	Cancel operation
OK	Confirm operation
UP	• For adjustment selection • For PIN code entry
DOWN	• For adjustment selection • For PIN code entry
RIGHT	• For adjustment selection • For PIN code entry
LEFT	• For adjustment selection • For PIN code entry
PIN code lock status	Lawnmower locked. Please enter the PIN code to unlock
Signal	The color indicates the signal level: strong solid green, common solid yellow, poor solid red. When the signal level poor, the lawnmower will stop in place.
RTCM module	RTCM module connected
Bluetooth	Bluetooth connected
Cellular data	4G connected
Wi-Fi	Wi-Fi connected
Battery level	When the battery level is low, the lawnmower will return to the station and charge.
Dashboard display	It shows the mowing percentage, PIN code, error code, etc. Meanings of the symbols on the display: Four-digit number: error code, for example, 1001. See for further instruction.

Basic operations:

Start mowing	Press MOW and then OK.
Lawnmower returns to the charging station	Press HOME and then OK.
How to unlock the lawnmower	Enter the PIN code.

NOTE:

Each time you do a panel operation, you need to enter your PIN code to unlock the lawnmower.

How to enter PIN code?

Press ∧ ∨ < > to input the code and press OK to confirm the code.

NOTE:

The default code is ∧∧∧∧ and you can go to **iSward Setting> Reset PIN code** in the iSward app to reset the code.

Screen interface displa

Interface1:

Welcome to iSward!

Interface2:

Press ∧ ∨ < > enter password.

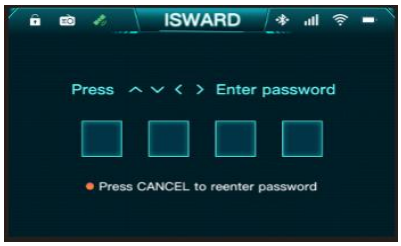

Interface3:

If the password is entered incorrectly, you should press OK to reenter the correct password.

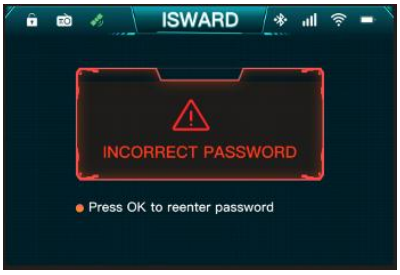

Interface4:

When you can see "**NORMAL STATUS THANK YOU FOR USING!**", means the password is correct and can be used normally.

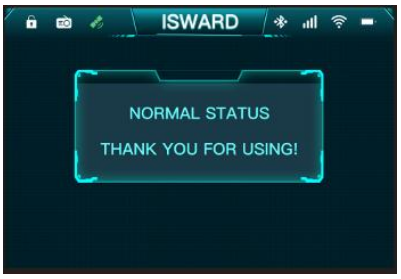

Interface5:

When the lawnmower is in an abnormal state, you can see the ERROR CODE. Then you can press ∧ ∨ to check error code and press OK to clear error.

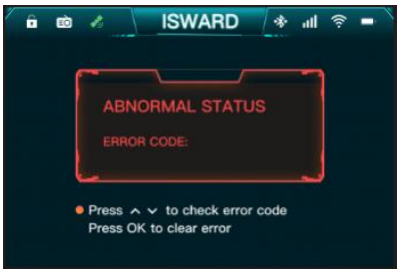

Interface6:

When the error clear failed, you should press OK button to return the error code page. Then you can press ∧ ∨ to check error code and press OK to clear error.

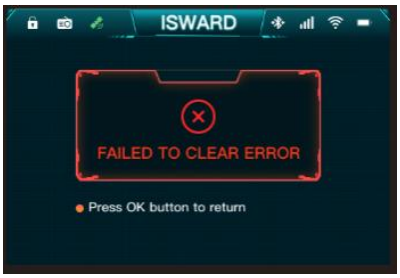

Interface 7:

When the error clear successfully, you should press OK to return the normal page.

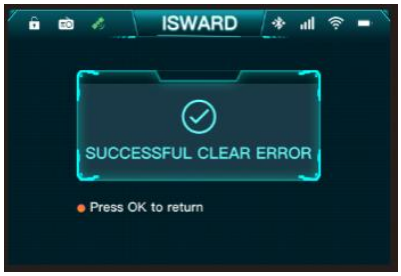

Interface 8:

Press OK to conform task.

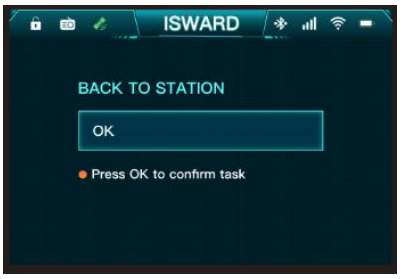

***Interface 9*:**

Choose the NEW TASK and press OK to conform task.

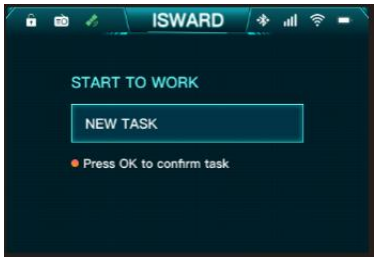

Interface 10：

Press ∧ ∨ to select task and press OK to conform task.

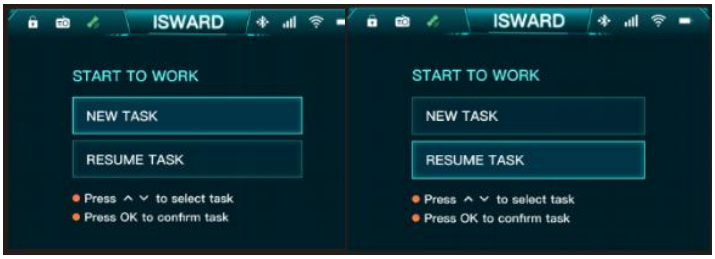

NOTE:

When there is no completed mowing task, you can choose to continue mowing or start a new task.

Interface 11：

When the lawnmower is ready to start mowing, you will see a countdown of 9 seconds!

You can press CANCEL to start task.

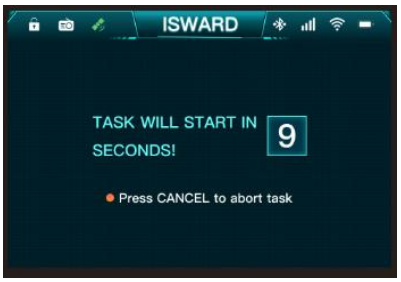

3.2 Light Cue

The logo indicator light

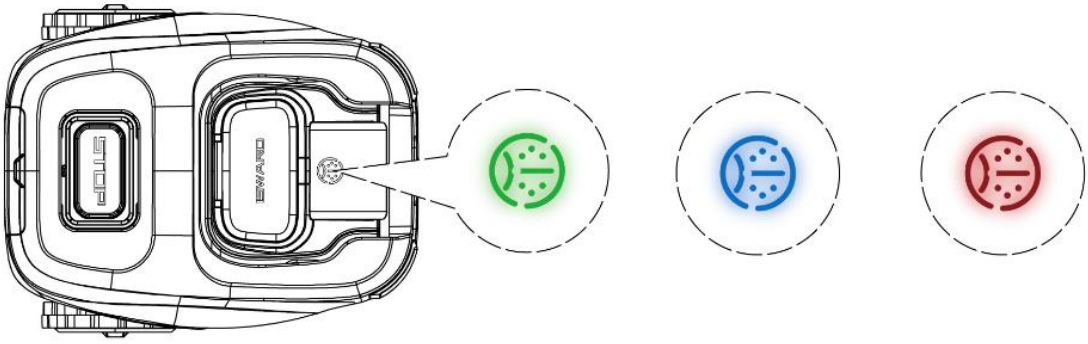

Solid green	Normal working status.
Flashing green	Mowing.
Solid blue	Fully charged
Flashing blue	Charging
Solid red	Emergency stop, Bumper sensor, Vision sensor, Lift sensor be triggered.
Flashing red	Under error state

NOTE:

When an error occurs, the logo indicator light flashes red along with a four-digit error code on the dashboard display. Check the app for error code meanings and solutions.

Charging station light cue

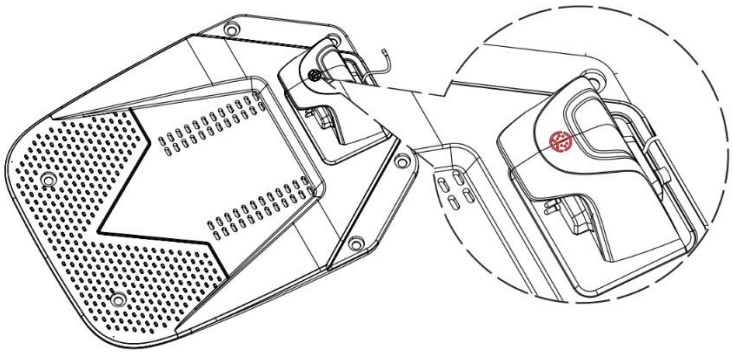

Solid green	The charging station is normal
The light is off	Under error status

RTK signal beacon light cue

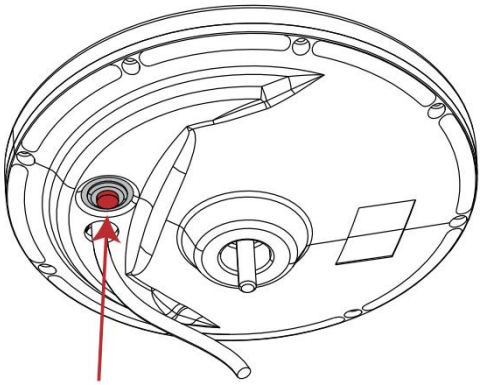

Solid blue	Normal power supply
The blue indicator blinks quickly.	Start calibration position
The blue indicator blinks slowly.	Finish calibration position

3.3 Mow

This part is mainly about how the lawnmower works, how to start and pause it during daily work, etc. Work settings related to mowing, such as: scheduled mowing, how to change cutting height, map management, etc.

How does iSward mow your lawn

Edge cut

Before mowing the work area, you can tap “Edge Trimming” to choose when or if you need to cut along the boundary.

Planned cut

Unlike most robotic lawnmowers, inside the work area, the lawnmower will mow the lawn along a planned path by an algorithm for maximum efficiency.

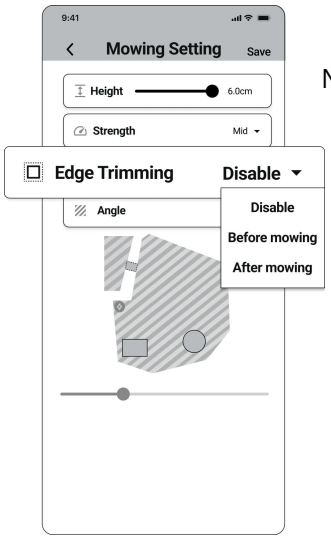

NOTE:

1. Before mowing for the first time, please cut your lawn to a height of no more than 6 cm.
2. During the working process, if the battery is low, the lawnmower will stop mowing and return to the charging station to charge. After fully charged, it will automatically return to the position where it previously stopped and continue mowing.

Start Mowing

There are two ways to start mowing:

a) On the lawnmower, press **MOW** and then **OK** to start mowing.

b) The lawnmower starts automatically according to the mowing schedule.

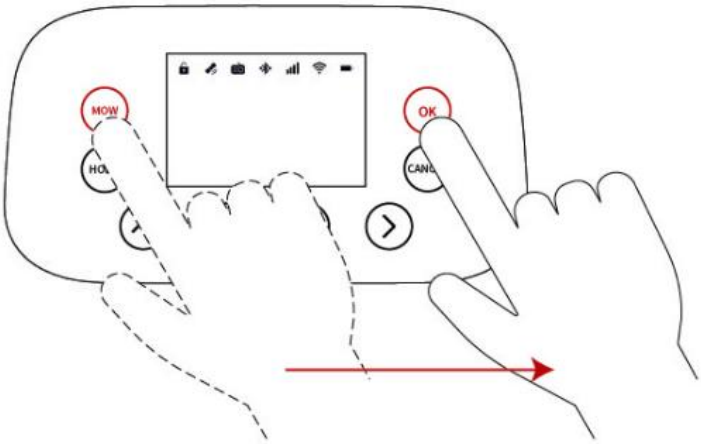

NOTE:

If the lawnmower is in lock status, first enter the PIN code to unlock the lawnmower.

Pause

a) Press the **STOP button** on the lawnmower.

b) In the app, tap "**Pause**".

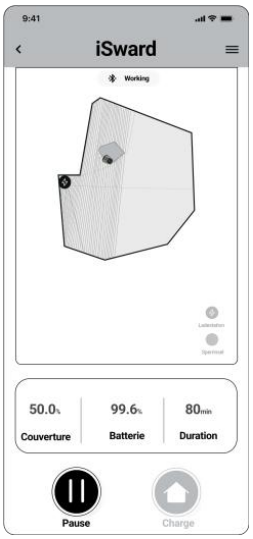

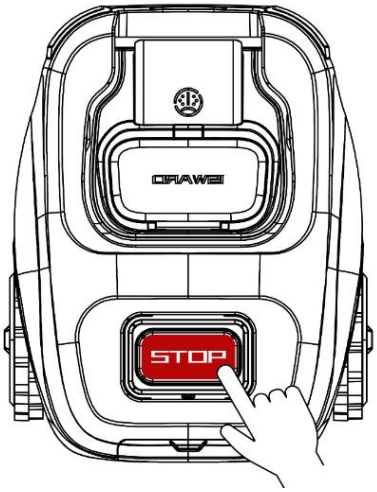

Resume Mowing

Continue mowing by pressing the **MOW** and then **OK** button on the control panel.

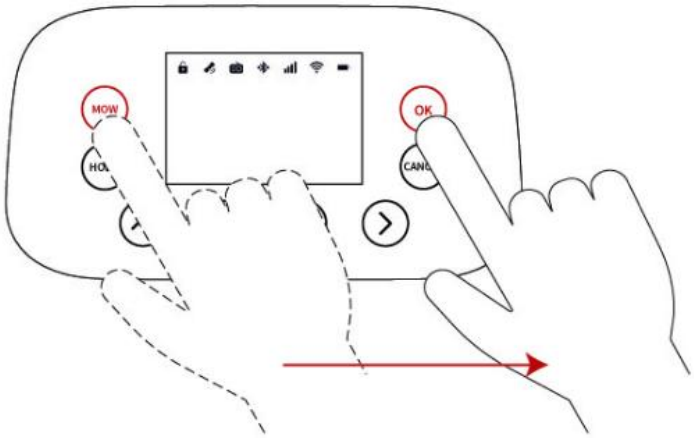

NOTE:

If a scheduled mowing task is paused and resumed later, iSward will still stick to the preset schedule.

Return to the Charging Station

Send the lawnmower back to the charging station in the app or press HOME and then OK button on the lawnmower.

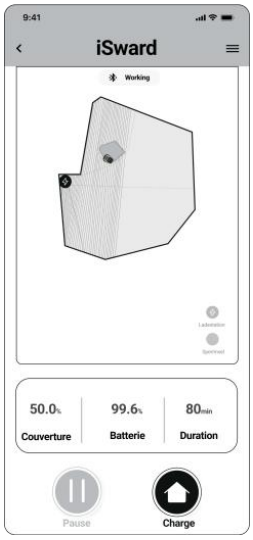

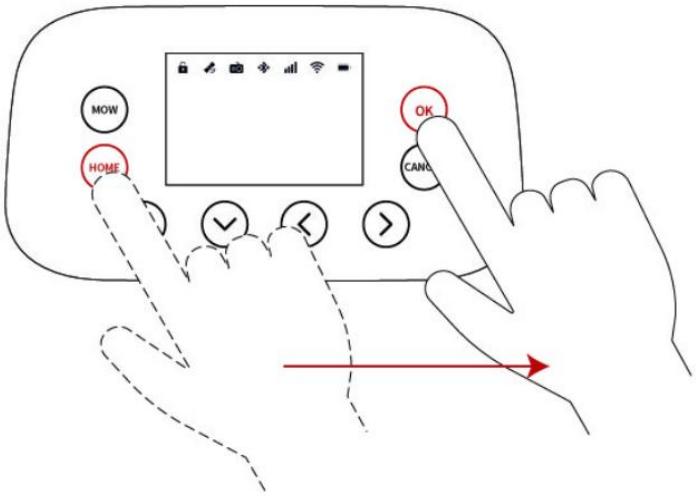

3.4 iSward app

NOTE:

The following illustrations regarding the app are for demonstration purposes only. Depending on software version, the options available may be different.

The iSward app is an important part of iSward, you can use the app to:

1. Bind and activate the lawnmower
2. Create a map (work area)
3. Check the status and work progress of the lawnmower, control the lawnmower stop or return to the charging station, etc.
4. View and change lawnmower work settings (Mowing schedule, Cutting height, Map management)
5. View and change lawnmower security/function settings (PIN, Anti-theft lock, etc.)
6. Update firmware
7. Unbind and add devices
8. Get help information and after-sales support

To Use the iSward App

1. Register and log in to your account.

2.Turn on your phone's Bluetooth function and make sure your phone has a network signal.

NOTES：

1. If you cancel your iSward account, all data related to iSward will be deleted.

2. During use, the iSward app will ask you for Bluetooth (iOS/Android), location (iOS/Android), and Wi-Fi access (iOS/Android). To ensure normal use, please grant the above accesses.

Activate your lawnmower

After registration and login, you will come to Device Activation Guidance, which will guide you to install, connect and activate your iSward. Tap "Add device".

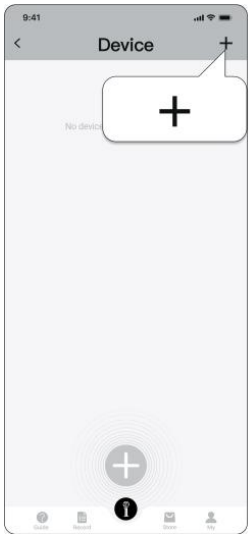

Create a map

Before mowing your lawn with iSward, you need to create a work area (map) using the iSward app. Go to **iSward Setting> Lawn Mapping**, and follow the instructions in the app.

You can tap and hold the appropriate button to edit the maps. Maps can be renamed or deleted on the settings page.

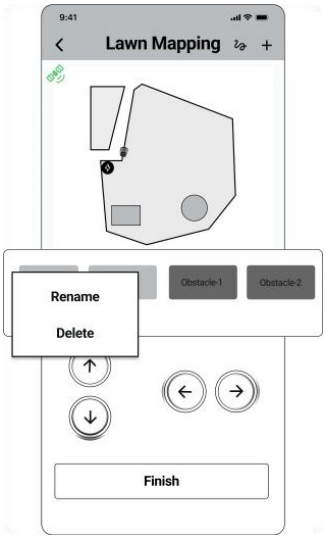

Check the signal

To check the signal distribution of the newly created map, you can view the signal icon at the top-left corner in the iSward app.

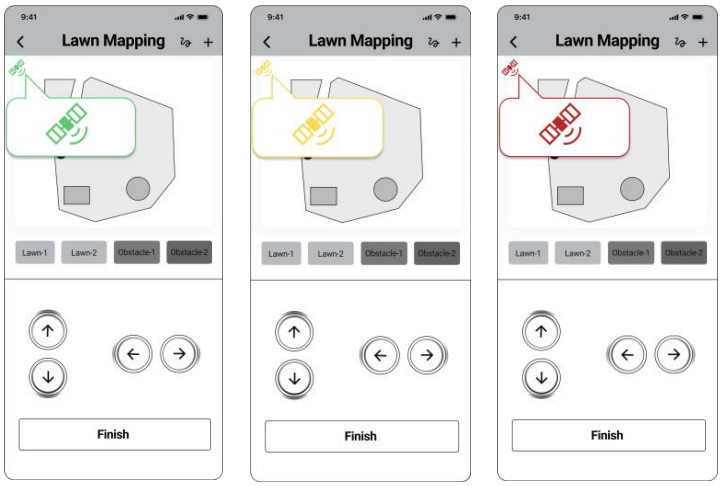

NOTE:

The signal icon is green means the signal is strong;

The signal icon is yellow means the signal is common;

The signal icon is red means the signal is poor.

Homepage

After mapping, you will come to the **Homepage**, where you can view the entire work area, the status of the lawnmower, remaining battery power(percentage), working hours, and the work progress (percentage). Settings and Notification pages can also be accessed from here.

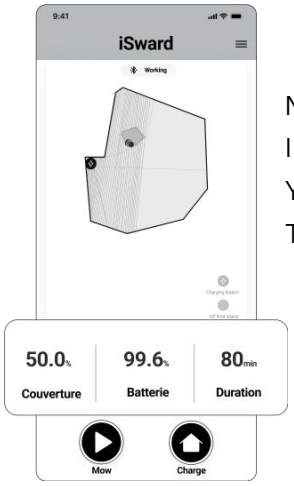

NOTE:

In the app, tap "**Start**" and the lawnmower will not start mowing.

You should first enter the PIN code on the lawnmower to unlock the lawnmower.

Then press **MOW** and then **OK** to start mowing.

3.5 Notifications

System notifications

Latest news and updates from iSward team.

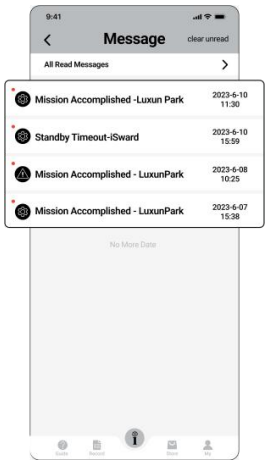

Device notifications

The lawnmower will send you device notifications in the following situations: work status update (such as mowing completed), blade replacement, unexpected behaviors, abnormal position, etc.

Pop-up messages

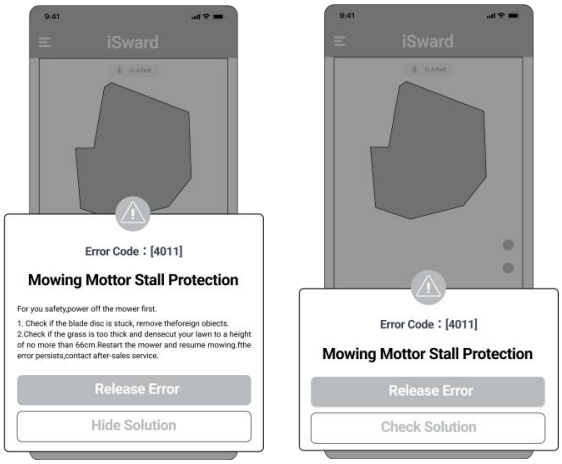

Pop-up messages appear at the bottom of the screen. For example, an error code message appears if an error has occurred.

3.6 Record (APP)

When your lawnmower finishes a grass cutting task, we will push the grass cutting record to the APP.

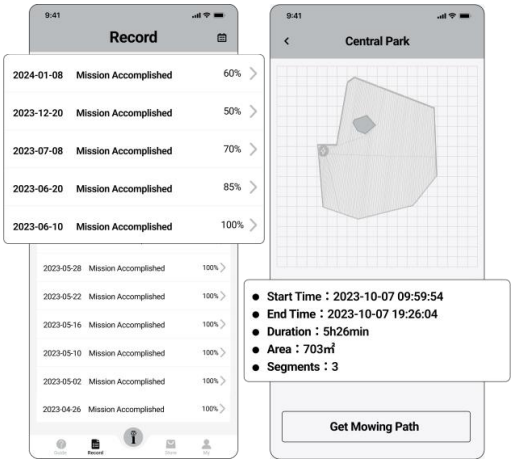

Tap "**Record**", you can get the information: Start time, End time, Duration, Area, Segments, etc.

Tap "**Get Mowing Path**", you can get the mowing path.

3.7 Settings (Lawnmower)

All lawnmower-related settings can be adjusted in the app. You can:

1. Change lawnmower work settings (mowing schedule, cutting height, map management, etc.)
2. Change lawnmower security settings and function settings (reset PIN code, etc.)

NOTE:

Setting adjustment requires the lawnmower to be online or connected to your phone via Bluetooth.

How to set mowing schedule

You can set the mowing schedule in the lawnmower settings. The lawnmower will work automatically according to the schedule.

The mowing schedule can be adjusted in **iSward setting > Schedule Setting**.

Choose a specific date and time period on the schedule page to set your mowing schedule:

- Tap the Hour bar on the page to add or delete working hours in the pop-up page.

- Tap a day of the week to toggle the mowing schedule on/off for that day.

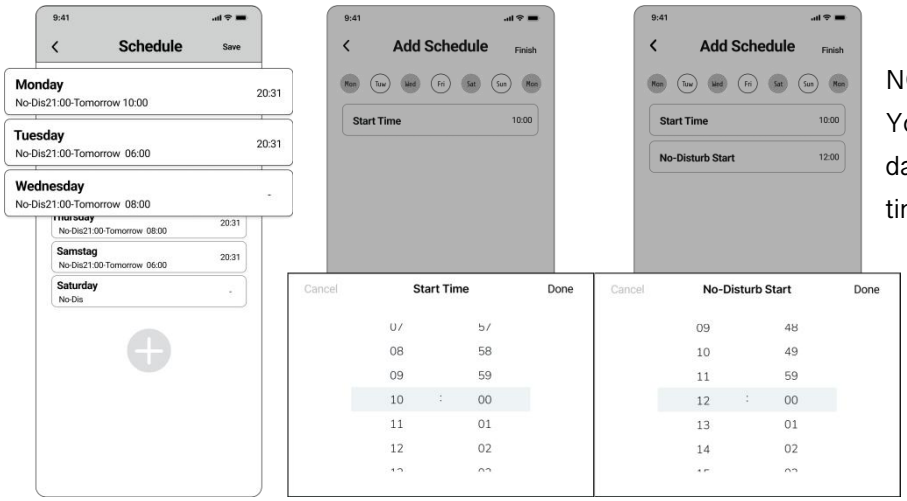

NOTE:
You need to set a time during the day to start mowing and multiple times when you can't mow. During the mowing process, set up non-mowing periods for you to use the lawn.

How to change the cutting height

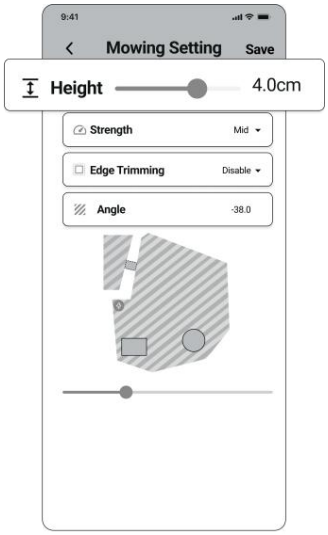

The cutting height can be adjusted in **Mowing Settings > height**, the adjustment range is 3~6cm, and the minimum adjustable segment is 1mm.

How to set the edge trimming

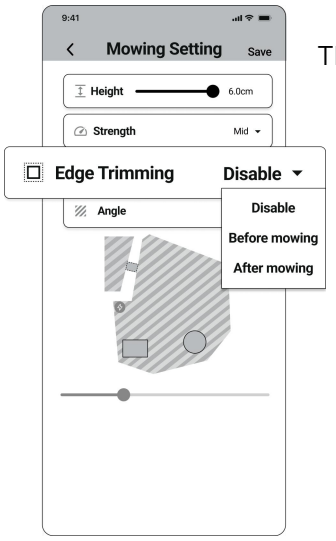

The edge trimming can be set in **Mowing Settings > Edge Trimming**, you can choose **"Disable"**, **"Before mowing"**, or **"After mowing"**.

How to edit the map

You can edit or delete the entire map in **iSward Settings>Lawn Mapping**. Make sure your phone is connected to the lawnmower via Bluetooth.

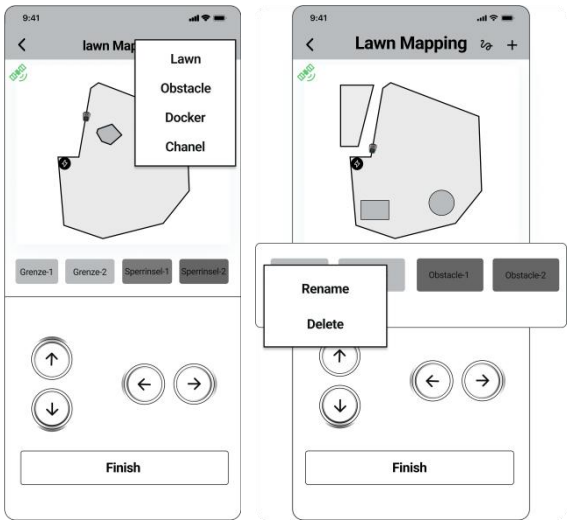

By tapping " **boundary**"," **off-limit island**", and "**channels**" you can: add or delete boundary, off-limit island, and channels.

NOTES:

1. When you delete a boundary, the element associated with the boundary (channel) is also deleted.
2. By tapping Delete you will delete the entire map. You need to create a new map before using the lawnmower.

Rain sensor

If it rains when mowing, the rain sensor will be triggered after receiving a certain amount of rainwater, and the lawnmower will automatically return to the charging station. After the water on the rain sensor dries, it will automatically resume the mowing task. Before the water dries, the lawnmower cannot be started via the buttons on the lawnmower. This is normal and not a malfunction of the lawnmower.

NOTES:

- For the best mowing results, it is recommended to mow in dry weather. Mowing in the rain can make the grass stick on the wheel and the lawnmower may slip.
- DO NOT mow in bad weather, such as heavy rain, thunderstorms or snow.

Anti-theft

Your mower has an anti-theft feature and you can effectively prevent accidents such as mower theft.
When moving out of a designated area, iSward will sound an alarm and you will receive a notification on the app simultaneously. At the same time, iSward team will send email alerts to your mailbox.

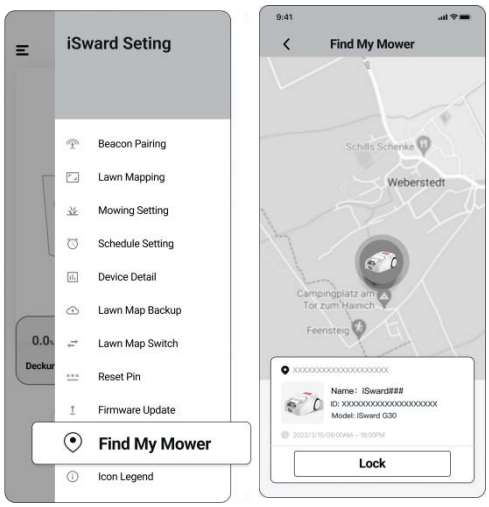

When you cannot find your mower, you can tap '**Find my mower**' on the app to check the location of the mower on the map. Then tap '**Lock**' to lock your mower.

NOTES:

1. If you want the Anti-theft unlock, you need to enter PIN on the APP.
2. Anti-theft is only available with 4G connection.

How to reset PIN code

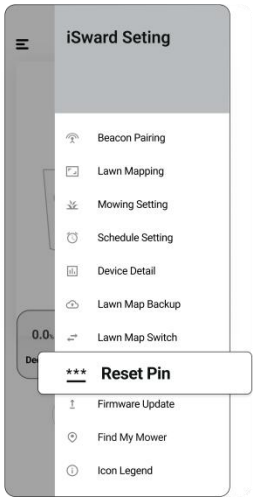

In factory settings, the default PIN code ^ ^ ^ ^ You can reset the PIN code in **iSward Setting> Reset Pin**.

NOTE:
It is recommended that you reset the PIN code after activating your lawnmower.

How to unbind a lawnmower

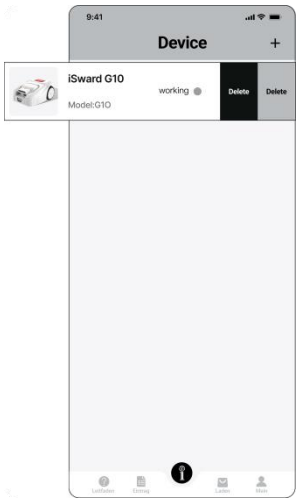

Each lawnmower currently supports binding to multi-app account. You can share it with family or friends.

NOTE:
Only one person can bind at a time.
You can unbind the lawnmower in the app. When unbinding, you need to be on the device home page slide your model button left and tap "**Delete**".

Firmware version

We will update the functions and firmware of iSward from time to time. In order to better experience the functions of iSward, it is recommended that you regularly check and update the firmware to the latest version.
Go to **iSward Setting> Firmware Update**.

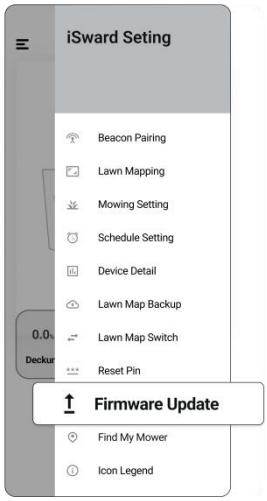

3.8 Related Settings (app)

Go to **My** to browse and adjust the related settings.

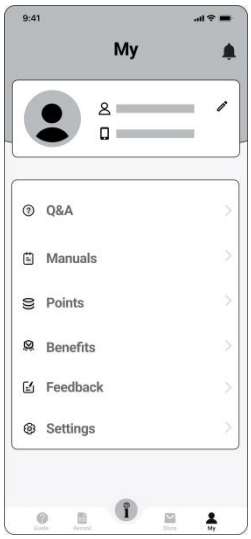

Q&A : You can view Common problems and solutions here.

Manuals : You can view the detailed installation instruction manual here.

Points : You can view your points here.

Benefits : You can view the benefits of your mower.

Feedback : You can describe the problems you have encountered with the iSward lawnmower.

Settings : You can view the iSward app related setting.

3.9 Obstacle Avoidance

Obstacle avoidance features are designed to increase the performance of your lawnmower and your safety.

Vision sensor

Vision sensor can significantly improve iSward's obstacle recognition and avoidance capability.

The Vision sensor is designed to achieve accurate obstacle avoidance by identifying grass and non-grass objects. Thanks to the advanced visual recognition algorithm, the sensor can identify obstacles and start avoiding obstacles when the lawnmower is about 0.3 m away from them. With the Vision sensor, the lawnmower can avoid some obstacles, such as trees and flowerpots, without setting them as off-limit islands. However, there is a certain probability that the Vision sensor will fail to recognize obstacles that are too small (less than 10 cm in length and width), too thin, tilted, dangling, or easily confused with lawn. For example , wire fences, moss, ornamental grass, bushes, dirt, roots, leaves, etc. Moreover, the vision sensor cannot recognize some pits, pools, pools, etc., and it is recommended that you set it as an off-limit island.

When the signal is weak, the lawnmower can still avoid obstacles through visual recognition.

NOTES:

1. In the case of insufficient light, the headlight of the machine will be lit to provide light for the Vision sensor, which can better avoid obstacles.
2. Clean the lens of Vision sensor by spraying water regularly, avoiding the lens being obscured by stains or mud.
3. For the best obstacle avoidance effect, we recommend that obstacles larger than 1 m and smaller than 0.1 m in diameter should be set as off-limit islands.

Bumper sensor

When the enclosure bumps into an obstacle and triggers the sensor, the lawnmower will back away from obstacles.

NOTES：
Your iSward is able to avoid objects after bumping into them. However, it is still recommended to remove excess clutter before mowing.

4.Maintenance

To achieve better mowing results and increase the service life, be sure to keep the lawnmower clean and the blades in good condition. Inspection and maintenance should be carried out by an adult every week. Any damaged or worn parts should be replaced.
DO NOT perform maintenance when wearing open sandals or barefoot. Always wear long trousers and work shoes when servicing the lawnmower.

4.1 Cleaning

Use a soft brush or cloth to clean the exterior of the lawnmower thoroughly. DO NOT clean with alcohol, gasoline, acetone, or other corrosive/volatile solvents. These substances may damage the appearance and internal structure of your lawnmower. For proper docking, periodically inspect and clean the charging station from debris and mud. Make sure all connecting parts of the charging station, the extension cable, and the power supply are not blocked.

A. Chassis and blade disc

If the chassis and blade disc are dirty, use a brush or a water hose to clean. DO NOT use a high-pressure washer. At the same time, make sure that the blade disc rotates freely and the blades can pivot freely.
CAUTION: High-pressure water can leak into the sealings and damage electronic and mechanical parts.

B. Blade fender

Check the blade fender regularly. If mud, grass clippings or other objects gather on the blade fender, remove them with a dry brush or scraper.

C. Wheels

Grass on the wheels can affect how the lawnmower performs when climbing slopes. Remove mud or other objects stuck in between to ensure strong grip.

D. Front wheels (universal wheels)

Inspect and clean universal wheels regularly. If the wheels are stuck, clean off the debris and lubricate the wheels.

E. Rain sensor

Check the rain sensor regularly and make sure the rain sensor is not covered by mud, grass clippings or other objects. You can either wash it or clean it with a soft brush. After cleaning, dry the sensor area.

F. Vision sensor

Check the Vision sensor regularly and make sure the Vision sensor is not covered by mud, grass clippings or other objects. You can either wash it or clean it with a soft rag.

WARNING

- Before cleaning, make sure the lawnmower is powered off.
- When the lawnmower is upside down, it must be powered off.

4.2 Replace Blade assembly

If the lawnmower is used on a regular basis, it is recommended to replace the blade assembly and screws to ensure safety and better mowing results. Replace the blade assembly and the screws at the same time for a safe cutting system.

NOTE:

When a blade component replacement prompt is displayed on the APP page, you need to replace the blade assembly as prompted.

WARNING

- Wear heavy gloves when you inspect or service the blade assembly.
- Only use the right type of screws and original blade assembly as approved by iSward.
- DO NOT reuse the screws. Doing so can cause serious injury.

How to replace the blade assembly

1. Turn off the lawnmower.
2. To avoid scratching, place the lawnmower on a soft and clean surface in an upside-down position.
3. Use a cross-tip screwdriver to loosen the screws on both sides of the guard.

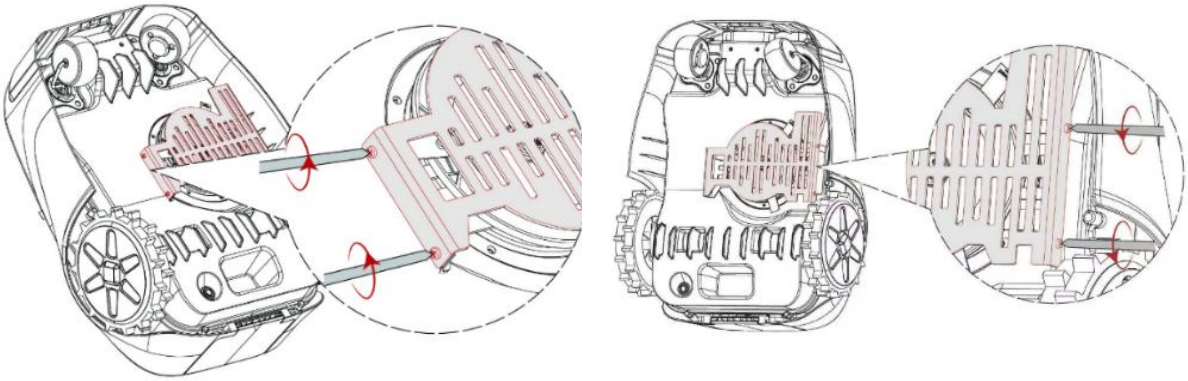

4. Set the removed shield aside
5. Use a cross-tip screwdriver to loosen the three screws.
6. Remove the screws and blade assembly.

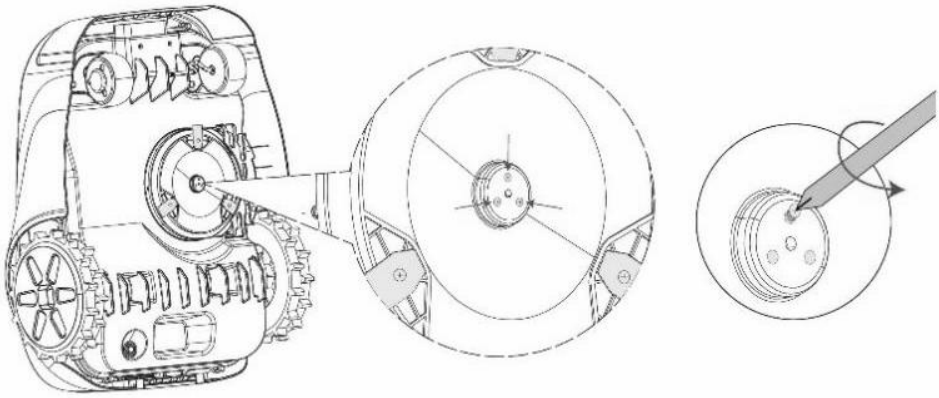

7. Fasten the new blade assembly and screws (Torque: 1 N · m). Make sure the blade assembly can pivot freely.

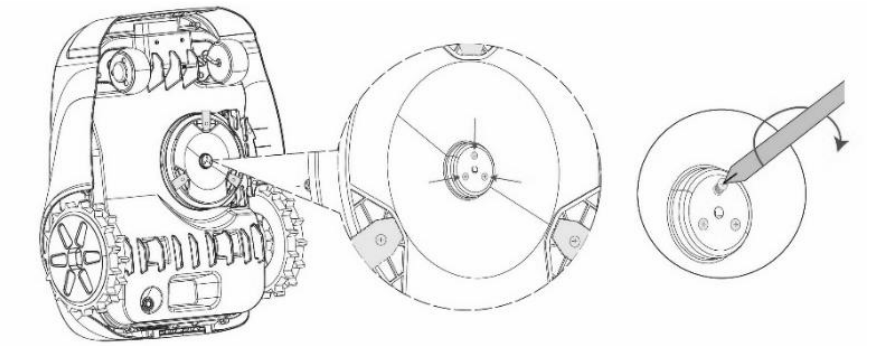

8. Install the removed shield.

4.3 Transportation

To protect the lawnmower, use the original packaging for long-distance transportation. Before lifting, moving, or transporting the product, turn it off. Handle with care and avoid violent force, such as throwing and heavy pressure. Never pick up or carry the lawnmower while the motor is running.

How to move or lift properly

Carry the lawnmower by the handle, with the blade disc facing away from your body.

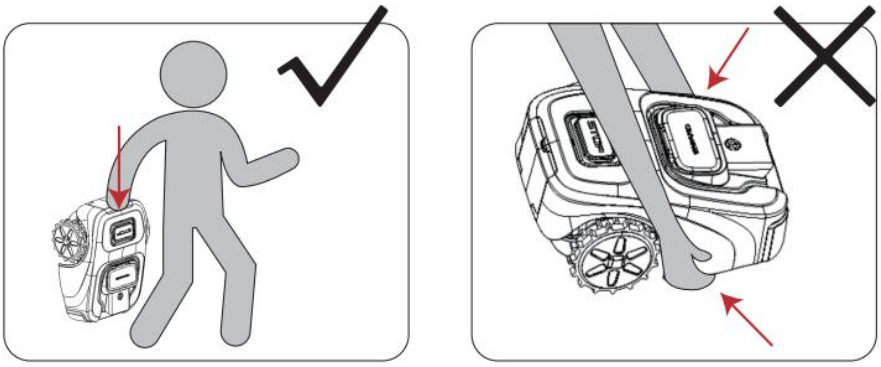

CAUTION:
To avoid damage to the lawnmower and/or the charging station, DO NOT lift the lawnmower by the handle when it's parked in the charging station. Remove the lawnmower from the charging station before lifting the lawnmower.

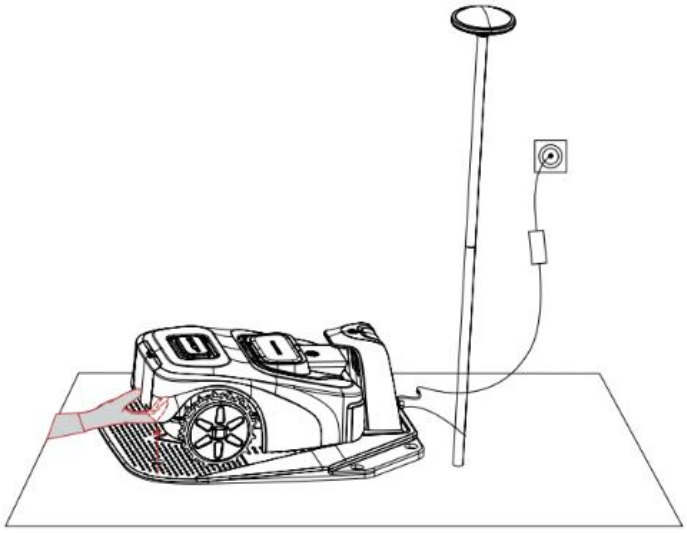

4.4 Battery

- Power off the lawnmower and keep the battery fully charged before storage to avoid over—discharge and damage to the electrical components. Charge the lawnmower every 120 days for long—time storage.
- Battery damage caused by over-discharge will not be covered by the Limited Warranty.
- DO NOT use the battery under extreme temperature conditions, i.e., above 60° C (140° F) or below -10° C (-4° F).
- DO NOT store the battery under extreme temperature conditions, i.e., above 30° C (86° F) or below -20° C (-4° F).
- Temperature protection will be activated at -10° C (14° F)/60° C (140° F), the battery won't be charged unless the temperature reaches 0° C (32° F) or reduces to 45° C (113° F) or below.

When the battery temperature is too high or too low, the lawnmower will not start mowing. You will also receive a push notification in the iSward app.

NOTE:

The battery life depends on how often the product is used and the total working hours. When the operation time is significantly shorter than usual per full charge or the lawn is not well-cut, consider replacing the battery.

How to replace the battery

1. Turn off the lawnmower.
2. Open the back cover of the lawnmower.
3. Turn the knobs on each side in the direction away from the center of the machine.
4. Take out the battery pack and replace it with the new one.
5. Pack the battery to the exact location and rotate the fixed button.
6. Close the back cover.

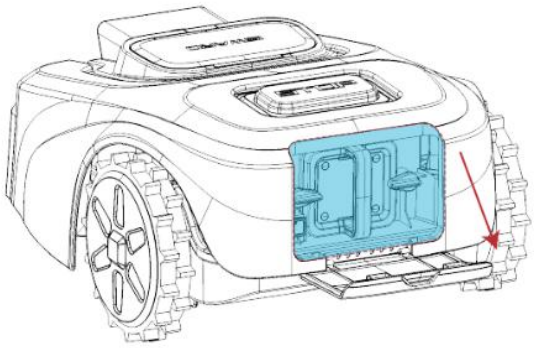

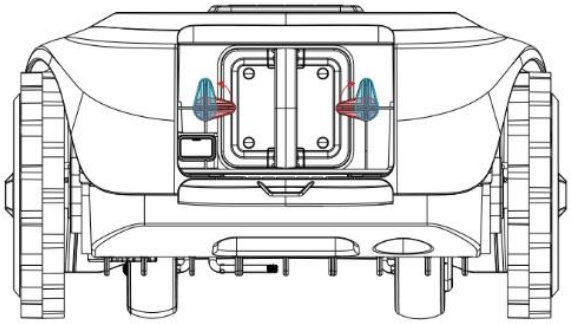

WARNING

Use only the original battery pack or that of the same model as specified by iSward. Each lawnmower contains one battery pack.

Do not use non-rechargeable batteries. For the purpose of recharging the battery, only use the detachable supply unit provided with this appliance.

DO NOT dismantle or puncture the battery casing. Keep away from metal objects to prevent short circuit. Keep away from fire, heat and direct sunlight.

For information about battery and electrical waste, please contact your household waste disposal service, your local or regional waste management office, or your point-of-sale.

The battery compartment is not supposed to be opened regularly. Only open the battery compartment when you need to change the battery.

The battery pack contains electrolytes. If the electrolyte leakage comes into contact with your skin, wash off

with soap and water immediately. Get medical help in case of eye contact and immediately flush the eyes with plenty of water for at least 15 minutes without rubbing.

4.5 Power Supply

- Disconnect the power supply:
  - Before clearing a blockage;
  - Before checking, cleaning or working on the machine;
  - After striking a foreign object to inspect the machine for damage.
- Regularly examine the cord, plug, enclosure and other parts. If any damage or signs of aging are found, stop using immediately.

WARNING

- DO NOT operate a damaged power supply. If the supply cord is damaged, it must be replaced by the manufacturer, its service agent or similarly qualified persons in order to avoid a hazard. If the extension cable is defective, please replace it with the long cable as approved by iSward.
- DO NOT connect a damaged cord to the power supply or touch a damaged cord or extension cable before it is disconnected from the power socket. Damaged cords can lead to contact with live parts.
- DO NOT use the power supply with any other product or battery, otherwise there will be risks of personal injury, fire or electrical shock. Product safety cannot be guaranteed with other than original batteries.
- DO NOT charge when the battery is leaking.
- Keep the extension cable away from moving hazardous parts to avoid damage to the cords which can lead to contact with live parts.

4.6 Storage

- Before storage, power off the lawnmower and charge its battery full to avoid over-discharge, which will cause permanent damage.
- Store in a cool and dry place indoors. Exposure to sunlight and temperature extremes (both hot and cold) will accelerate the aging process of the components and may permanently damage the battery.
- Keep the lawnmower, charging station and power supply away from heat sources (such as stoves, radiators, etc.) or chemicals. Protect the power supply from moisture and keep it in a well-ventilated place.

WARNING

When there is a risk of a thunderstorm, unplug the power supply from the power socket. Disconnect all cables and wires connecting to the charging station. Reconnect when there is no longer a risk of thunder.

Extra requirements for winter storage

- The lawnmower

Clean the lawnmower thoroughly before storage. Check the components subject to wear such as the blades. Repair or replace them if they are in poor condition. Store the lawnmower in a dry and frost-free place, while standing on all wheels, preferably in the original packaging.

- The charging station and RTK signal beacon

Unplug the power supply from the power socket and disconnect it from the charging station. Disconnect the RTK signal beacon from the charging station and take it down from the standing pole. Keep the charging station and RTK signal beacon indoors and out of direct sunlight.

4.7 Recycling and End-of-life Disposal

DO NOT treat this product as domestic waste. For recycling information, contact your domestic waste service, your municipality, or point of sale.

WARNING

DO NOT dispose of this product in a landfill, by incineration, or by mixing with household trash. Danger or serious injury can occur because of the electrical components.

4.8 Others

- Keep all screws, nuts and bolts tight to ensure normal and safe operation.
- To ensure good grip of the tread, keep the drive wheels (rear wheels) clean by removing any mud with a brush.
- The removal of the housing must be opened and resealed by authorized service technicians ONLY. Servicing by yourself can void the Limited Warranty.

NOTICE: INSURANCE

YOUR INSURANCE POLICIES MAY NOT PROVIDE COVERAGE FOR ACCIDENTS INVOLVING THE USE OF THIS PRODUCT. TO DETERMINE IF COVERAGE IS PROVIDED, PLEASE CONTACT YOUR INSURANCE COMPANY OR AGENT.

5.FAQ and Troubleshooting

The following chart offers a guide to help identify an issue, and if possible, repair by yourself. When the problem cannot be solved, consult an authorized dealer or repairer.

Issue	Possible Causes	Solutions
Abnormal vibration when the lawnmower is operating	A damaged blade disc	Check the blades and the blade disc. Replace if damaged or worn. The blade disc has to be replaced by an authorized technician.
Delayed lawnmower movement when laying the boundary via the app.	Unstable Bluetooth signal	Stay close to the lawnmower (within 5 meters) when laying the boundary.

The lawnmower cannot get accurate GPS location persistently	1. The RTK signal beacon on the lawnmower is covered or blocked 2. The RTK signal beacon or charging station is covered or blocked 3. The firmware version is too old	1. Make sure the lawnmower is not covered by anything. 2. Remove anything that is covering or blocking the charging station, or relocate the RTK signal beacon to a place with a good signal. 3. Update to the latest firmware
Shorter working hours per full charge	1. Aged battery pack 2. Lawn condition (long grass, changed garden layout, etc.)	1. Replace the battery pack. 2. This is normal.
It takes less time to fully charge the lawnmower	Aged battery pack	Replace the battery pack.
The lawnmower does not charge or it turns off automatically in the charging station	1. High/low battery temperature 2. The charging station is not connected to the power socket 3. The contact strip is unclean	1. When the lawnmower temperature returns normal, try charging again. 2. Connect the charging station to the power supply and plug it into the power socket. 3. Clean the contact strip.
The lawnmower does not work according to the schedule	1. The STOP button is pressed down or jammed and the lawnmower cannot start automatically 2. Low battery 3. Water on the rain sensor	1. Make sure the STOP button is completely released. Turn off the lawnmower and check if there is any foreign object stuck in the STOP button. If yes, remove the object and try mowing again. 2. Charge the lawnmower battery full. 3. If the rain sensor is triggered, the lawnmower cannot start working. Wait for the water to dry up.
The lawnmower does not go back to the charging station	1. The RTK signal beacon is blocked 2. The charging station is covered or blocked by obstacles 3. Items are blocking the upper surface of the lawnmower so that the built-in RTK signal beacon cannot receive the signal well	Remove all obstacles covering, blocking or surrounding the charging station and the beacon.
The lawnmower is stuck	1. The wheels lost traction because of mud or grass 2. Soft ground such as sand 3. Deep ditch	1. Remove anything that's stuck on the wheels. 2. Set soft areas as off-limit islands when necessary. 3. Fill in the gap and keep the lawn surface level and flat.
The lawnmower goes outside the boundary	1. The wheels lost traction because of mud or grass 2. The boundary is set on a slope 3. Weak satellite signal reception	1. Remove anything that's stuck on the wheels. 2. Change the location of the boundary. 3. Try to install the beacon in a relatively open space to allow the beacon to have a clear view of the sky, where at least 110° of the sky is unobstructed.
The lawnmower does not move in a regular pattern in certain areas	There are obstacles in the area	The lawnmower will automatically adjust its moving pattern and resumes to normal.

Uneven or patchy mowing	1.The preset mowing time is insufficient 2. The blades are blunt 3. The grass is too high 4. The blades cannot pivot normally	1. Adjust the mowing time so that it matches the mowing area and the lawnmower has enough time to finish the task. 2. Replace the blades. 3. Set the cutting height to a higher level and then lower to the desired height gradually. 4. Clean the blades.
The lawnmower cannot power on	The battery is over-discharged	Place the lawnmower in the charging station, fully charge it, and restart the lawnmower.
The lawnmower mows the lawn by itself without any manual operation	1. Manual mowing mode (start mowing either via the app or by pressing the lawnmower buttons) 2. Mowing schedule 3. Rain sensor	1. If you started manual mowing mode before, the lawnmower will keep working until 100% of the mowing task is completed. When the battery level is low, the lawnmower will return to the charging station. When the battery is charged full, the lawnmower will resume the previous mowing task automatically. When the mowing task is completed (100%), the lawnmower will exit the manual mowing mode. 2. If you have set a mowing schedule (and you didn't start manual mowing before), the lawnmower will automatically start the mowing task according to the schedule. When the battery level is low, the lawnmower will return to the charging station. When the battery is charged full, the lawnmower will resume the previous mowing task automatically until the mowing task is completed (100%). 3. When the rain sensor is triggered, the lawnmower will stop the task and return to the charging station. After the water on the rain sensor is dry, it will automatically continue until the mowing task is finished. However, if it's past the scheduled time, the lawnmower will not resume mowing.
Certain areas are not cut	1. Inaccurate positioning 2. Obstacle avoidance 3. Tall grass	1. The lawnmower's moving path depends on satellite positioning, occasionally inaccurate positioning may lead to missed cuts, and the missed area will be covered after a few more cuts. 2. If an obstacle is encountered during mowing, the lawnmower will avoid the obstacle, which can result in certain areas not being cut. This is normal and a new feature will be added to make the lawnmower cut the missed area with obstacles again. 3. If the grass is higher than 20cm, the ultrasonic sensor will be triggered and the lawnmower will avoid areas with high grass.
The lawnmower does not cut the	1. Cutting motor over-current protection	1. When the grass is too thick, the cutting motor will automatically enter self-protection and stop rotating

grass, or the blades stop rotating during the mowing process	2. Foreign objects 3. Obstacle avoidance 4. The lawnmower does not cut when going back to the charging station, or when going to the starting point of the mowing session. This is normal and the lawnmower will only cut on the planned cutting path.	when the current is too high. At this time, it is recommended to increase the mowing height, or use other mowing tools to trim the lawn to 6cm or lower first. 2. Please confirm whether there is any foreign object stuck in blade disc or blades, if any, please clean it in time. 3. When the lawnmower is avoiding an obstacle, the bump sensor will shut down the blades temporarily. When this protection mechanism is finished, the blades will continue rotating. 4. Normal

When there is an abnormality, an error code is shown in the app and the lawnmower display. Below is a list of the error codes, what they mean and what to do:

Error Code	Meaning	Solution
1001	Mowing motor stall protection	For your safety, power off the lawnmower first. 1. Check if the blade disc is stuck, remove the foreign objects. 2. Check if the grass is too thick and dense, cut your lawn to a height of no more than 6 cm. Restart the lawnmower and resume mowing. If the error persists, contact after-sales service.
1002	Cutting height motor stall protection	For your safety, power off the lawnmower first. Check if there are foreign objects above the blade fender, such as grass clippings, stones, etc., and clean it up. Restart the lawnmower, and adjust the cutting height to 6cm for testing. If the error persists, contact after-sales service.
2001	Battery temperature is too high	Place the lawnmower in the shade (operating temperature: -10~60 degrees Celsius), waiting half an hour. If the error persists, contact after-sales service. Do not disassemble the battery pack and make sure to use a genuine battery.
2002	Battery temperature is too low	Place the lawnmower in a warm environment (operating temperature: -10~60 degrees Celsius), waiting half an hour. If the error persists, contact after-sales service. Do not disassemble the battery pack and make sure to use a genuine battery.
2003	The battery is too low	Please move the lawnmower to the charging station to charge. Let the lawnmower charge for a while, then restart the lawnmower. If the error persists, contact after-sales service.
3001	Sensor system self-check failure	Please restart the lawnmower. If the error persists, contact after-sales service.
3002	IMU bias error	Please keep the lawnmower level and still, restart the lawnmower. If the error persists, contact after-sales service.
3003	Bluetooth link error	Please restart the lawnmower. If the error persists, contact after-sales service.
3004	IoT link error	
3005	Unable to connect the RTK signal beacon	1、 Check whether the light at the lower end of the beacon blinks slowly. 2、 If the lights are working, remove anything that is covering or blocking the RTK signal beacon.

		3、 Please waiting 30 minutes, when the robot is connected to the RTK signal beacon, the robot will automatically start cutting the grass. If the error persists, contact after—sales service.
3006	Lawn data loading failure	Please restart the lawnmower or rebuild the map. If the error persists, contact after-sales service.
3007	Lawnmower can't get out of the charging station	Please restart the lawnmower. If the error persists, contact after-sales service.
3008	Software node error	
4001	Lawnmower is outside the boundary	Please place the lawnmower on an open and flat surface within the boundary, and press your PIN code on the lawnmower, then press MOW+OK to resume mowing. If it fails, restart the lawnmower and then put it in the charging station. If the error persists in the same area, set the area as an off-limit island.
4002	Lawnmower has turned over	Please place it in the proper position and put it back in the boundary or charging station. Then press MOW+OK to resume mowing. Please set the area where the lawnmower turns over frequently as an off-limit island.
4003	Lawnmower cannot return to the charging station	Please confirm no obstacles in the path and the charging station is installed on a flat surface. Please restart the lawnmower and press your PIN code on the lawnmower, then HOME+OK to return. If the error persists, check if the charging station and the beacon have been moved since the previous mapping and rebuild the map. If it still cannot be solved, contact the after-sales service.
4004	Bumper sensors triggered	Please remove the obstacles or tap the sensor gently to release it, press your PIN code on the lawnmower and press MOW+OK to resume mowing. If it fails, restart the lawnmower and then put it in the charging station. If the error persists, contact after-sales service.
4005	Lawnmower is lifted	Please place the lawnmower on a flat surface and check if the front wheels are stuck, then press your PIN code and press MOW+OK to resume mowing. If it fails, restart the lawnmower and then put it in the charging station. If this happens frequently, contact after-sales service.
4006	Lawnmower gets stuck in obstacles	Please confirm no obstacles in the path and the charging station is installed on a flat surface. Press your PIN code on the lawnmower, then HOME+OK to return. If the error persists, check if the charging station and the beacon have been moved since the previous mapping and rebuild the map. If it still cannot be solved, contact the after—sales service.
4007	Lawnmower is shaking.	Please turn off the lawnmower and place the lawnmower on a flat surface and check to see if the cutter is stuck, then press your PIN code and press MOW+OK to resume mowing. If it fails, restart the lawnmower. If this happens frequently, contact after-sales service.
4008	Rain sensors triggered	After the water on the rain sensor is dry, the lawnmower will automatically continue until the mowing task is finished. However, if it's past the scheduled time, the lawnmower will not resume mowing.
4009	Control Board error	Please restart the lawnmower. If it still cannot be solved, contact the after-sales service.
4010	Display error	Please restart the lawnmower. If it still cannot be solved, contact the

		after-sales service.
4011	STOP button is pressed	Please press your PIN code on the lawnmower and press MOW+OK to resume mowing. If the error persists, contact after-sales service.
5001	Vision sensor system error	A system error occurred in Vision sensor. Please restart the lawnmower. If the error persists, contact after-sales service.
5002	Stained camera	Please clean the camera lens, then press your PIN code on the lawnmower and press MOW+OK to resume mowing. If the error persists, contact after-sales service.
5003	Vision sensor disconnected	Please check if the Vision sensor is disconnected from the lawnmower. If you intended to do so, please disable the Vision sensor in APP setting. If the error persists, contact after-sales service.
5004	Emergency stop module fault	Please restart the lawnmower. If it still cannot be solved, contact the after-sales service.
5005	Bumper sensors & Lift sensors fault	Please restart the lawnmower. If it still cannot be solved, contact the after-sales service.
5006	Drive motor fault	Please restart the lawnmower. If it still cannot be solved, contact the after-sales service.
5007	Driver board communication fault	Please restart the lawnmower. If it still cannot be solved, contact the after-sales service.
5008	Sensor board communication fault	Please restart the lawnmower. If it still cannot be solved, contact the after-sales service.
5009	GPS module fault	Please restart the lawnmower. If it still cannot be solved, contact the after-sales service.
500A	Radio module fault	Please restart the lawnmower. If it still cannot be solved, contact the after-sales service.
FFFF	Unknown	Please restart the lawnmower. If it still cannot be solved, contact the after-sales service.

6.Important Information

6.1 Certifications

Supplier's Declaration of Conformity
Compliance Information

Unique Identifier	
Product Description	
Model Number	G10/G20/G30
Trade Name	Robotic lawnmower
FCC Compliance Statement	
This device complies with part 15 of the FCC Rules. Operation is subject to the following two conditions: (1)	

This device may not cause harmful interference, and (2) this device must accept any interference received, including interference that may cause undesired operation.	
Responsible Party – U.S. Contact Information	
Company:	Shanghai Xiaojia Data & Technology Co.,LTD
Address:	2F, No. 979 Yunhan Road, Lingang New Zone, China (Shanghai) Pilot Free Trade Zone, 201306
Telephone or internet contact information:	service@isward-tech.com

Warning:

Any changes or modifications to this unit not expressly approved by the party responsible for compliance could void the user's authority to operate the equipment.

NOTE:

This equipment has been tested and found to comply with the limits for a Class B digital device, pursuant to part 15 of the FCC Rules. These limits are designed to provide reasonable protection against harmful interference in a residential installation. This equipment generates, uses and can radiate radio frequency energy and, if not installed and used in accordance with the instructions, may cause harmful interference to radio communications. However, there is no guarantee that interference will not occur in a particular installation. If this equipment does cause harmful interference to radio or television reception, which can be determined by turning the equipment off and on, the user is encouraged to try to correct the interference by one or more of the following measures:

—Reorient or relocate the receiving antenna.

—Increase the separation between the equipment and receiver.

—Connect the equipment into an outlet on a circuit different from that to which the receiver is connected.

—Consult the dealer or an experienced radio/TV technician for help.

6.2 FCC CAUTION

This device complies with part 15 of the FCC Rules. Operation is subject to the following two conditions: (1) This device may not cause harmful interference, and (2) this device must accept any interference received, including interference that may cause undesired operation.

Any changes or modifications not expressly approved by the party responsible for compliance could void the user's authority to operate the equipment.

Note: This equipment has been tested and found to comply with the limits for a Class B digital device, pursuant to part 15 of the FCC Rules. These limits are designed to provide reasonable protection against harmful interference in a residential installation. This equipment generates, uses and can radiate radio frequency energy and, if not installed and used in accordance with the instructions, may cause harmful interference to radio communications. However, there is no guarantee that interference will not occur in a particular installation. If this equipment does cause harmful interference to radio or television reception, which can be determined by turning the equipment off and on, the user is encouraged to try to correct the interference by one or more of the following measures:

—Reorient or relocate the receiving antenna.

—Increase the separation between the equipment and receiver.

—Connect the equipment into an outlet on a circuit different from that to which the receiver is connected.

—Consult the dealer or an experienced radio/TV technician for help.

The equipment complies with FCC radiation exposure limits set forth for an uncontrolled environment. The

equipment should be installed and operated with minimum distance 20cm between the radiator and your body.

6.3 ISED WARNING

This device complies with Innovation, Science and Economic Development Canada licence-exempt RSS standard(s). Operation is subject to the following two conditions: (1) this device may not cause interference, and (2) this device must accept any interference, including interference that may cause undesired operation of the device.
Le présentappareilestconforme aux CNR d'Industrie Canada applicables aux appareils radio exempts de licence. L'exploitationestau-torisée aux deux conditions suivantes : (1) l'appareil ne doit pas produire de brouillage, et (2) l'utilisateur de l'appareildoit accepter tout brouillageradioélectriquesubi, mêmesi le brouillageest susceptible d'encompromettre le fonctionnement.

This Class B digital apparatus complies with Canadian ICES-003.
Cetappareilnumérique de la classe B estconformeà lanorme NMB-003 du Canada. Les communications effectuées au moyen de cetappareil ne sont pas nécessairement protégées des indiscrétions.
The equipment complies with ISED radiation exposure limits set forth for an uncontrolled environment. The equipment should be installed and operated with minimum distance 20cm between the radiator and your body.
Déclarationd'exposition aux radiations: Cetéquipementestconforme aux limitesd'exposition aux rayonnements ISEDCanada établies pour unenvironnementnon contrôlé. Cetéquipementdoitêtreinstalléetutilisé avec un minimum de20cm de distance entre la source de rayonnement et votre corps.

6.4 Limited Warranty

Limited Warranty and Arbitration Agreement (EMEA)
NOTICE:
PLEASE READ THIS LIMITED WARRANTY AND ARBITRATION AGREEMENT AND KEEP THIS AGREEMENT FOR FUTURE REFERENCE. THIS AGREEMENT CONTAINS LIMITED WARRANTY CLAUSES FOR CONSUMERS IN EUROPE, MIDDLE EAST AND AFRICA (“EMEA”) AND ARBITRATION CLAUSES WITH RESPECT TO ISWARD (“PRODUCT”) AND ANY AND ALL TRANSACTION AND CLAIM RELATED TO AND/OR ARISING OUT OF THE PRODUCT.

THIS IS A BINDING LEGAL AGREEMENT (“AGREEMENT”) BETWEEN YOU (EITHER AN INDIVIDUAL OR ENTITY) AND THE MANUFACTURER (“SUNRAY”), ISWARD, AND THEIR AFFILIATES (INCLUDING BUT NOT LIMITED TO THEIR PARENT COMPANY, SUBSIDIARY, AFFILIATED COMPANIES, PREDECESSOR, SUBSEQUENT COMPANY, ADMINISTRATORS, SUCCESSORS, ASSIGNS, OFFICERS, DIRECTORS, MANAGERS, EMPLOYEES, MEMBERS, SHAREHOLDERS, AND AGENTS, ATTORNEYS, INSURERS OR REINSURERS) (COLLECTIVELY “ISWARD PARTIES”), ISWARD DEALERS (AS DEFINED BELOW) AND THEIR AFFILIATES (COLLECTIVELY “ISWARD DEALERS”).

PURCHASING THE PRODUCT, OPENING THE PRODUCT PACKAGING, USING THE PRODUCT, RETAINING THE PRODUCT, EXPLOITING THE BENEFITS OF THIS AGREEMENT, OR ELECTRONIC

ACCEPTANCE OF THIS AGREEMENT SHALL CONSTITUTE ACCEPTANCE OF THIS AGREEMENT. IN AN EVENT YOU, AS A PARENT(S) OR LEGAL GUARDIAN(S), PURCHASE THIS PRODUCT ON BEHALF OF OR FOR YOUR CHILDREN, YOU HEREBY CONSENT TO AND APPROVE IN ALL RESPECTS THE TERMS AND CONDITIONS OF THE AGREEMENT AND AGREE THAT BOTH YOU AND YOUR CHILDREN SHALL BE BOUND BY THIS AGREEMENT. YOU ACKNOWLEDGE AND AGREE THAT YOU RECEIVE SUFFICIENT NOTICE OF THIS AGREEMENT AND YOU AGREE TO THIS AGREEMENT.

6.4.1 Limited Warranty

This Limited Warranty covers only defects of any material or quality of the Product and components when the Product and components thereof are being used under normal and ordinary conditions. In the event that a defect covered by this Limited Warranty occurs, iSward and/or other iSward Parties in its sole discretion will repair or replace the defective Product or components thereof in accordance with this Limited Warranty. The applicable Limited Warranty Period for the Limited Warranty commences on the date of the original purchase of the Product from either of iSward, iSward's authorized reseller, iSward's authorized distributor, or an authorized Dealer (each a "iSward Dealer" or collectively the "iSward Dealers").

Product covered by this warranty	Limited Warranty Period
G10	2 years
G20	2 years
G30	3 years
Battery pack and power adaptors	1 years

Blade assembly is seen as disposable and are not covered by this warranty.

THIS LIMITED WARRANTY HEREIN IS THE ONLY EXPRESS WARRANTY APPLICABLE TO PRODUCT AND ITS COMPONENT PARTS, ACCESSORIES, AND SERVICE REPAIR. ISWARD AND ISWARD PARTIES DISCLAIM ALL OTHER EXPRESS WARRANTIES. ISWARD AND OTHER ISWARD PARTIES LIMIT THE DURATION AND REMEDIES OF ALL IMPLIED WARRANTIES, INCLUDING WITHOUT LIMITATION TO THE WARRANTIES OF MERCHANTABILITY AND FITNESS FOR A PARTICULAR PURPOSE, WHETHER ARISING BY LAW, COURSE OF DEALING, COURSE OF PERFORMANCE, USAGE OF TRADE OR OTHERWISE, TO THE DURATION OF THIS EXPRESS LIMITED WARRANTY.

THIS LIMITED WARRANTY DESCRIBES THE SERVICE AVAILABLE TO YOU IN THE EVENT YOUR PRODUCT REQUIRES WARRANTY SERVICE. THIS LIMITED WARRANTY IS AN ADDITIONAL WARRANTY, THAT DOES NOT IN ANY WAY AFFECT OR LIMIT THE STATUTORY RIGHTS YOU MAY HAVE AS A CONSUMER, FOR EXAMPLE, WITH RESPECT TO CONFORMITY, AND YOU MAY HAVE ADDITIONAL PROTECTIONS UNDER YOUR LOCAL LAWS.

6.4.2 Limited Warranty Service Process

iSward's online services are available at https://www.isward-tech.com. During your use of the Product, you believe the Product or its component is defective and/or does not work correctly. PLEASE IMMEDIATELY STOP USING THE PRODUCT, AND STORE THE PRODUCT PROPERLY. YOUR CONTINUED USE OF

THE PRODUCT UNDER SUCH CIRCUMSTANCE MAY CAUSE SEVERE BODILY INJURY OR EVEN DEATH TO YOU OR THE OTHERS AND/OR CAUSE PROPERTY DAMAGES. Thereafter, please immediately contact iSward at **service@isward-tech.com**. iSward's technical support personnel are available to assist you online or over the phone in diagnosing the defect, and if any, and providing further instructions. In the event the warranty services are required, please prepare for the following materials, including (i) proof of the original purchase of the Product from iSward Dealers, (ii) the Product's serial number, and (iii) a description of the defect if applicable. Upon the verification of your eligibility for the Limited Warranty protection and/or services, you should provide your name, email address, mailing address, and contact phone number to us, we will guide you to get our service.

If you want to return the defective unit to service, you shall be responsible for the cost of shipping and risk of loss and damage that may occur during the shipment from you to iSward and (ii) from iSward to you. You must include your defective Product or component within the original or iSward-approved packaging, which will be provided at your cost, for shipment of the Product to iSward. You shall defend, indemnify, and hold iSward harmless any loss and/or damages that may be caused by your improper packaging or shipment of the Product or component to iSward.

An authorized service provider or iSward Dealer will inspect your returned Product. If iSward reasonably determines that the problem is not covered by the Limited Warranty, iSward will notify you and inform you of service or replacement alternatives that are available to you on a fee basis, or iSward will return your Product to you unrepaired, and in such instance, you will be responsible for the cost of shipping and insurance for shipment of your Product from iSward to you. In an event that any services are not covered by the limited warranty and you reject a paid service recommended by iSward Parties and/or iSward Dealer, you understand and acknowledge that failure to repair and/or services the Product may increase the risk of fall and/or Product failure which may result in severe property damages, severe bodily injury or death, and you agree that this is your informed consent to take such risk.

For a return eligible for the warranty protection and/or services, iSward will serve defective Products with new or reconditioned parts of the same or similar style at no cost to you for the service. Parts replaced by iSward will be retained by and become the property of iSward. In such a situation, iSward will pay reasonable return shipping charges for the return of the Product to you.

6.4.3 Limited Warranty Eligibility

6.4.3.1 Your service request must be received by iSward within the Limited Warranty Period as described above, and iSward must receive your Product in accordance with the Limited Warranty Service Process defined above.
6.4.3.2 Your Product must be purchased from an authorized iSward Dealer.
6.4.3.3 You must provide the original purchase receipt.
6.4.3.4 Your Product must have serial number legible, unobscured, untampered, and unmodified.
6.4.3.5 All tamper-resistant seals must be intact, in place, and unmodified.

6.4.4 Limited Warranty Exclusions

This Limited Warranty describes the service available to you if your product requires warranty service, and you

may have additional protections under your local laws. This Limited Warranty does not cover and excludes damage to your product or any component thereof caused by:

6.4.4.1 Abuse, misuse, recklessness, negligence, or commercial use.
6.4.4.2 Improper charging, storage, maintenance, or operation of the Product not in compliance with instructions or limitations as provided in the user materials.
6.4.4.3 Use of the Product not in compliance with applicable laws and regulations.
6.4.4.4 Use of the Product by persons with inadequate experience.
6.4.4.5 Accident, collision, fire damage, water damage, chemical damage, use of the product outside of the product's working temperature range, high-pressure water spray, earthquake, dropping.
6.4.4.6 Modifications to mechanical parts, modification of electronic parts, or modifications to software embedded in the Product.
6.4.4.7 Service, repair, and maintenance by unauthorized providers.
6.4.4.8 Cosmetic damages.
6.4.4.9 Use of the Product with third party product, component, or accessory.
6.4.4.10 The normal deterioration of wear and tear parts.
6.4.4.11 Use of the Product with overdue wear and tear parts.

6.4.5 LIABILITY DISCLAIMER AND LIMITATION

6.4.5.1 ISWARD PARTIES DO NOT ASSUME OR AUTHORIZE ANYONE TO ASSUME ON ITS BEHALF, ANY OTHER OBLIGATION OR LIABILITY 65 IN CONNECTION WITH THE PRODUCT, ITS COMPONENT PARTS, ACCESSORIES, SERVICE REPAIR, OR THIS LIMITED WARRANTY.
6.4.5.2 ISWARD PARTIES AND ISWARD DEALERS ARE NOT RESPONSIBLE FOR ANY LOSS OF USE OF A PRODUCT, ITS COMPONENT PARTS, ACCESSORIES, OR FOR ANY INCONVENIENCE OR OTHER LOSS OR DAMAGE WHICH MIGHT BE CAUSED FROM ANY DEFECT IN A PRODUCT, ITS COMPONENT PARTS, ACCESSORIES, SERVICE REPAIR, OR FOR ANY OTHER INCIDENTAL OR CONSEQUENTIAL DAMAGES YOU MAY HAVE AS A RESULT OF ANY DEFECT IN A PRODUCT, ITS COMPONENT PARTS, ACCESSORIES, OR SERVICE REPAIR. SOME COUNTRIES DO NOT ALLOW THE EXCLUSION OR LIMITATION OF INCIDENTAL OR CONSEQUENTIAL DAMAGES, SO THE ABOVE LIMITATION OR EXCLUSION MAY NOT APPLY TO YOU TO THE EXTENT THAT IT IS DISALLOWED BY APPLICABLE LAW.
6.4.5.3 IN NO EVENT, ISWARD PARTIES AND ISWARD DEALERS' TOTAL AND AGGREGATE LIABILITY FOR ALL CLAIMS UNDER ANY AND ALL APPLICABLE LAW OR THEORY, JOINTLY OR SEVERALLY, ARISING OUT OF OR RELATED TO THE PURCHASE OF THE PRODUCT, USE OF THE PRODUCT, BREACH OF CONTRACT, TORTS (INCLUDING NEGLIGENCE) OR OTHERWISE, EXCEEDS THE DUTY TO REPAIR OR REPLACE ANY DEFECTIVE PRODUCT, FURTHER SUBJECT TO ISWARD'S SOLE AND EXCLUSIVE DISCRETION. IN NO EVENT SHALL BE ISWARD PARTIES AND ISWARD DEALERS BE LIABLE TO ANY PERSON FOR CONSEQUENTIAL, INDIRECT, INCIDENTAL, SPECIAL, EXEMPLARY, PUNITIVE OR ENHANCED DAMAGED ARISING OUT OF, OR RELATING TO, AND/OR IN CONNECTION WITH THE PURCHASE OF THE PRODUCT, ANY BREACH OF THIS AGREEMENT OR MANUFACTURER'S DUTIES REGARDLESS OF (A) WHETHER SUCH DAMAGES WERE FORESEEABLE, (B) WHETHER OR NOT ISWARD OR OTHER ISWARD PARTIES WERE ADVISED OF THE POSSIBILITY OF SUCH DAMAGES, AND (C) THE LEGAL OR EQUITABLE THEORY (CONTRACT, TORT OR OTHERWISE) UPON WHICH THE CLAIM IS BASED UNLESS SUCH

LIMITATIONS AND EXCLUSIONS ARE PROHIBITED BY APPLICABLE LAW. THE FOREGOING LIMITATIONS OR EXCLUSIONS APPLY EVEN IF AN AGGRIEVED CUSTOMER OR ANY OTHER PERSON'S (WHO MIGHT HAVE RIGHT OR CLAIM UNDER THIS AGREEMENT BY OPERATION OF LAW OR EQUITY) REMEDIES UNDER THIS AGREEMENT FAIL THEIR ESSENTIAL PURPOSE. IN THE EVENT SOME COUNTRIES DO NOT ALLOW THE EXCLUSION OR LIMITATION OF CERTAIN OR ALL OF THE FOREGOING DAMAGES, SO TO THE EXTENT THAT SUCH LIMITATIONS OR EXCLUSIONS ARE NOT ALLOWED BY LAW, THEY MAY NOT APPLY TO YOU. SOME COUNTRIES DO NOT ALLOW THE EXCLUSION OR LIMITATION OF INCIDENTAL OR CONSEQUENTIAL DAMAGES, SO TO THE EXTENT THAT SUCH LIMITATIONS OR EXCLUSIONS ARE NOT ALLOWED BY LAW, THE ABOVE LIMITATION OR EXCLUSION MAY NOT APPLY TO YOU.

6.4.5.4 To the extent permitted by applicable law, ISWARD PARTIES and ISWARD DEALERS hereby DISCLAIM any liability and thereby shall not be responsible for any damages, including but not limited to death, bodily injury, or damages to property, arising out of or related to any conduct (including misconduct), action, inaction, act (including failure to act), omission or negligence by any authorized or unauthorized dealer, distributor, wholesaler, retailer, service provider or third party that involves into the distribution of Product or the services thereto. To the extent permitted by applicable law, the explicit representations and warranties, if any, provided herein, shall be the only warranties and representations made by ISWARD PARTIES to YOU, any consumer, and/or end-user. and ISWARD PARTIES shall not be responsible for any other warranties and/or representations that may be given and/or provided by another person unless ISWARD PARTIES have in a written form explicitly authorized such additional warranty and/or representation to be given to consumer or end-user.

6.5 About the Manual

Please update the iSward app for the latest version to get the latest User Manual. The content entry can be found in the app via My>Manual. The functions and contents mentioned in this manual are related to the product model you purchase, the markets and the software version. Refer to the release NOTE for the latest feature updates.

6.6 Contact Us

Manufacturer: Shanghai Xiaojia data & Technology Co., LTD.
Address: 2F, No. 979 Yunhan Road, Lingang New Zone, China (Shanghai) Pilot Free Trade Zone, 201306
Contact us if you experience issues relating to the operation, maintenance and safety, or errors/faults with your lawnmower.
Europe Authorized representative:
CALLE RIO TORMES NUM. 1, PLANTA 1, DERECHA, OFICINA 3, Fuenlabrada, Madrid, 28947 Spain

Website: https://www.isward-tech.com
E-mail Sales: info@isward-tech.com
E-mail Service: service@isward-tech.com

The manufacturer reserves the right to make changes to the product, release firmware updates, and update this manual at any time. Illustrations of the product, accessories, and app interface in the User Manual are for reference purposes only. Actual product and functions may vary. Go to https://www.isward-tech.com/ for the latest user materials.