Datawell Waverider Manual

DWR4

Datawell
Zomerluststraat 4
2012 LM Haarlem
The Netherlands
T: +31 23 531 4159
E: sales@datawell.nl
www.datawell.nl

February 14, 2024

The state of the art transmitter used in our Waveriders is fully similar with our transmitter tested by the Notified Body in 2013 and therefore compliant with our Declaration of Conformity.

IMPORTANT

- **In case a transmitter is used within territorial waters a radio permit from the local authorities is obligatory.**
- **The transmitting frequency band 28.0 MHz – 29.7 MHz is reserved for amateur radio operators and must be avoided.**

Declaration of conformity

(According to EN ISO/IEC 17050-1:2004)

Document No.: Datawell_DoC_DWR_Mk4_1_2

Manufacturer's name: Datawell B.V.
Manufacturer's address: Zomerluststraat 4
2012 LM Haarlem
The Netherlands

Declares under sole responsibility that the product:

Product name: Waverider
Trade name: Datawell
Model: DWR4

complies with the essential requirements of the following applicable European Directives, and carries the CE marking accordingly:

RE Directive (2014/53/EU)
ROHS Directive (2011/65/EU)

and conforms with the following product standards:

RED EN 300 220-1/EN 300 220-2
EN 300 390-1/EN 300 390-2
EN 301 489-1/EN 301 489-3
EN 55022
EN 55024
EN 61000-6-1/EN 61000-6-3

Supplementary Information:

This DoC applies to above-listed products placed on the EU market after:

June 13, 2017
Date

Eric Stoker
Quality Assurance Manager

Contents I

General
1 Introduction
2 Quick Start/Installation Guide
3 Specifications
4 Location of components
5 Transportation
6 Storage

Measurements
7 Wave Height And Direction
8 Acoustic Current Meter (ACM)
9 Sea surface water temperature
10 Compact Air Temperature
11 GPS position

Communication
12 HF communication
13 GSM-internet communication
14 Iridium-SBD satellite communication
15 Iridium-internet satellite communication
16 Argos satellite communication
17 Data logger

Operational
18 Starting the buoy
19 Hull and hatchcover
20 Batteries and power
21 Solar power option
22 External switch
23 LED flashlight
24 Painting, anti-fouling and corrosion protection
25 Mooring
26 Deployment and recovery

Service
27 Consumables
28 Inspection and maintenance
29 Trouble Shooting
30 Buoy Tester Application
31 Calibration and repair
32 Contact
33 References

Contents II

1 Introduction 11

2 Quick Start/Installation Guide 13

2.1 Items required for wave measurement 13
2.2 Dangers and warnings 14
2.3 Starting the buoy 15
2.4 Buoy tester application 15
2.5 Receiving antenna installation 15
2.6 RX-C4 receiver 15
2.7 Software 16
2.8 Mooring preparation 21
2.9 Buoy Deployment 21
2.10 Buoy Recovery 22

3 Specifications 25

4 Location of components 27

4.1 Hull 27
4.2 Hatchcover 30
4.3 Antennas 33

5 Transportation 35

5.1 Transport frame 35
5.2 Weights and dimensions 36

6 Storage 37

6.1 Sensor fluid temperature 37

7 Wave height and direction 39

7.1 Principle of measurement 39
7.2 Wave motion sensors 39
7.3 Buoy axes and references 40
7.4 Data processing 41
7.5 Mooring influence 45
7.6 Specifications 46

8 Acoustic Current Meter (ACM) 47

8.1 Measuring currents with your DWR4 47
8.2 Acoustic transducers and electronics 48
8.3 Measured parameters 50
8.4 Timing 52
8.5 Simplified measurement principle 52
8.6 Corrections for salinity and temperature 53
8.7 Specifications 53

9 Sea surface water temperature 55

10 Compact Air Temperature 57

10.1 Correction for absorption- and emission of radiation 58
10.2 Detection of solar-induced uncertainty and evaporation 58
10.3 Specifications 59

11 GPS position ... 61
11.1 GPS position antenna ... 61
11.2 GPS position specifications ... 61
12 HF communication ... 63
12.1 Transmitter frequencies ... 63
12.2 HF antenna ... 63
12.3 Specifications ... 63
13 GSM-internet communication ... 65
13.1 Choosing a GSM network provider ... 65
13.2 Preparing the SIM-card ... 65
13.3 GSM antenna ... 65
13.4 Internet communication ... 66
13.5 Specifications ... 66
14 Iridium-SBD satellite communication ... 67
14.1 Iridium satellite system ... 67
14.2 Iridium SBD service and email ... 67
15 Iridium-internet satellite communication ... 71
15.1 Iridium-satellite system ... 71
16 Argos satellite communication ... 79
16.1 Installing the Argos antenna ... 79
16.2 Configuring the Argos transmitter ... 80
16.3 Argos message ... 80
16.4 Email ... 80
16.5 Argos specifications ... 80
17 Data logger ... 81
17.1 Removing the compact flash card ... 81
17.2 Compact flash card ... 81
17.3 Logger file format ... 81
17.4 Preparing the logger ... 82
17.5 Retrieving logger files ... 82
17.6 System log file ... 83
18 Starting the buoy ... 85
18.1 Start-up sequence ... 85
19 Hull and hatchcover ... 87
19.1 AISI316 and Cunifer10 ... 87
19.2 Mooring eye ... 87
19.3 Fender ... 87
19.4 Anti-spin triangle ... 87
19.5 Handles ... 88
19.6 Flange and FS direction ... 88
19.7 Drying agent bags, plywood ... 89
19.8 Hatchcover and option ports ... 89
19.9 Console setup ... 92
19.10 Buoy options setup ... 95

20 Batteries and power 101
20.1 Datacell primary cells 101
20.2 Battery replacement and wiring 0.9m DWR4/ACM 101
20.3 Battery replacement and wiring 0.7m DWR4/ACM 104
20.4 Battery replacement and wiring 0.9m DWR4 106
20.5 Battery replacement and wiring 0.7m DWR4 108
20.6 Power consumption and operational life 110
21 Solar power option 111
21.1 Solar panel 111
21.2 Power storage pack 112
21.3 Operation 112
22 External switch 113
23 LED flashlight 115
24 Painting, anti-fouling and corrosion protection 117
24.1 Painting instructions 117
24.2 Anti-fouling 119
24.3 Anodes 120
25 Mooring 121
25.1 Stainless steel 121
25.2 Anchor weight 121
25.3 Shackles and split pins 121
25.4 Polypropylene (PP) rope 122
25.5 Sinker 123
25.6 Floats 124
25.7 Rubber cords 124
25.8 Solution for twisted mooring line 125
25.9 Chain coupling and swivel 126
25.10 Standard mooring layout 127
25.11 Applicability of the standard mooring layout 133
25.12 Custom-made mooring 133
26 Deployment and recovery 135
26.1 Preparation 135
26.2 Buoy deployment 135
26.3 Buoy recovery 136
27 Consumables 139
27.1 Logger 139
27.2 Batteries 139
27.3 Sacrificial anodes 139
27.4 Bags of drying agent 139
28 Inspection and maintenance 141
28.1 Service parts kit 141
28.2 Opening the buoy and sealing rings 141
28.3 Mooring 141
28.4 Corrosion 141
28.5 Marine growth 142
28.6 HF/LED/CAT4 antenna whip 142

28.7 GPS antenna 142
28.8 Accelerometer fluid level 142
28.9 Acoustic transducers 144

29 Trouble Shooting 151

29.1 Buoy diagnosis 151
29.2 Batteries 151
29.3 Wave motion sensors 151
29.4 GPS position 152
29.5 HF transmitter 152
29.6 LED flashlight 153
29.7 Sea surface temperature sensor 153
29.8 Compact Air Temperature sensors 153
29.9 Acoustic current meter 154

30 Buoy Tester Application 157

30.1 Installation and preparations 157
30.2 Buoy tester 157
30.3 Data file 162

31 Calibration and repair 165

31.1 Calibration 165
31.2 Repair 165
31.3 Assistance and training 165

32 Contact 167

32.1 Serial number 167

33 References 169

1 Introduction

This manual describes the Directional Waverider 4 series (DWR4). It covers the following models, standard features and options.

- DWR4, stabilized platform accelerometer-based wave motion sensor
- Stainless steel hull (AISI316)
- Cunifer10 hull
- 0.9m buoy
- 0.7m buoy
- Power switch
- Painted hull

- Sea surface temperature
- Compact Air temperature (CAT4)
- HF communication
- Data logger
- GPS position
- LED flash light
- Primary cells

- Acoustic Current Meter (ACM)

- GSM-internet communication
- Iridium-SBD satellite communication
- Iridium-internet satellite communication
- Argos satellite communication
- Solar Power System

2 Quick Start/Installation Guide

2.1 Items required for wave measurement

In the purchasing phase Datawell Sales has collected all information necessary to provide you with the most suitable choice of instruments and options, including a tailor-made mooring (on request, based on your specified local conditions).
This document assumes you have a complete set of wave measuring equipment, consisting of the following items:

- Mooring; ready-made and fit to your local conditions, consisting of polypropylene rope, possible sinker weights, rubber cord(s), floats and terminals packed in a blue container and carton
- All shackles needed, with bolts, nuts and split pins, some spare split pins
- Datawell Waverider buoy including hatchcover, packed in a transport frame
- GSM or Argos antennae are packed inside the buoy.
- Stabilizing chain including anodes are pre-mounted at the bottom end of the buoy hull. Cunifer buoys do not require anodes on the stabilizing chain
- Separate HF/CAT4/LED flasher antenna
- Receiving ground-plane antenna or portable antenna
- Antenna coaxial cable
- RX-C4 receiver
- This Installation Guide and Reference Manuals of the Waverider buoy and receiver

Datawell does not supply the following items, which you have to provide for yourself:

- Mooring weight; recommended is a scrap steel chain of 500 Kg weight for 0.9 m buoys and approximately 300 Kg for 0.7 m buoys
- Subsurface float if needed, at depth as communicated by Datawell Sales
- Receiving antenna mast
- PC or laptop
- Power cable for receiver

2.2 Dangers and warnings

Datawell distinguishes dangers, threatening your life and warnings, threatening your equipment. Below you will find a summary of dangers and warnings related to the present product.

2.2.1 Dangers

- Waverider buoys must be handled and serviced by qualified personnel only.
- Never deploy the anchor weight first, always deploy the buoy first followed by the mooring line, and finally deploy the anchor weight.
- Never stand within loops in the mooring line, never stand between mooring and the ship board. Lines may pull you overboard.
- Elongated rubber cords represent considerable elastic energy; do not stand in line with or near tense rubber cords. Snapping lines may cause injury.
- Prevent the batteries from being short-circuited. Despite the low voltage large currents may flow.
- While transporting the buoy either by car or by boat, tie it down firmly. A buoy moving uncontrolled is dangerous.
- Use Datawell supplied or recommended batteries (Datacell) only. Non-original batteries may produce hydrogen gas.
- A reversed battery in a series of cells produces hydrogen gas which constitutes a risk when servicing the Waverider. Strictly observe the battery replacement procedure in this manual. Ingression of water can also lead to gas formation through electrolysis. Handle your buoy with care. Delay manipulating electrical connections and do not allow any ignition source until you have removed the hatchcover and allowed for 10 minutes of natural ventilation.
- Do not use empty batteries as ballast in the buoy. Dispose the empty batteries immediately after use.

If one or more bolts are broken and as a result you can't remove the hatchcover, make sure to tighten all bolts again and make the buoy water/air tight. Now you must first remove the broken bolts with (for instance) a grinder. Because the buoy is airtight, there is no risk of leaking hydrogen gas and thus ignition.

2.2.2 Warnings

- Do not spin your DWR4 buoy more than 10 turns at once or faster than 1 turn/10 s. This may damage the motion sensor inside. Apply an anti-spin triangle if you expect vessels to graze along or against your buoy.
- Do not expose your DWR4 buoy to temperatures below −5 ºC for longer periods, the fluid in the sensor could be permanently altered.
- Do not insert magnetic materials in the DWR4 buoy as this will affect the magnetic compass readings. Use original Datawell parts.
- Safeguard the GPS antenna from collisions, paint and dirt. GPS signals are shielded by certain types of paint, dirt, etc.
- Protect the rubber cords from being cut, leave them in their blue plastic containers whenever this is possible.
- Use of non-original mooring line parts may cause galvanic corrosion, early wear, etc. and may result in disruption of the mooring line and consequential buoy loss.
- Close the hatchcover whenever the buoy is not in use. Otherwise the bags of drying agent inside the buoy will take up moisture and become saturated. Particularly for a cold buoy (out of the water) placed in a humid environment, saturation will set in very fast.
- Avoid corrosion of your stainless steel buoy. Apply anodes.
- Always cover unused option ports with a blind flange and rubber sealing ring.
- Prolonged use of the Argos satellite communication unit without an Argos antenna may damage the unit.

2.3 Starting the buoy

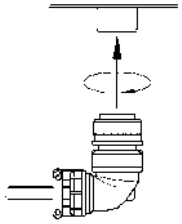

Before switching ON the buoy, unscrew the hatchcover from the hull, connect the plug at the end of the main hatchcover connector cable between the hull and the electronics unit as shown on the right and put the hatchcover back in place. In case of under-pressure in the hull use the lifting hole to open the hatchcover. Clean the o-ring groove beforehand. Take care that the rubber sealing ring completely resides in the circular groove otherwise water will enter the buoy. Fasten the 24 hexagon socket screws.

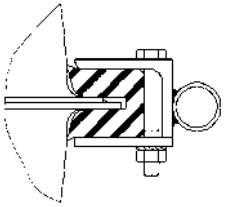

If you ordered an anti-spin triangle on your Waverider buoy, you can apply it now. In case of an Acoustic Current Meter, please refer to the reference manual for correct orientation of the triangle. If you expect difficulties in transporting the buoy with the triangle in place, you may delay mounting it until the buoy is on board the ship. Lift the triangle over the buoy and lower it on to the fender. Use two screw bolts and one plate on all three touching sides to attach the triangle.

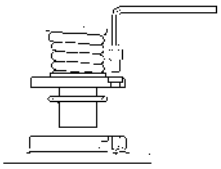

Place the HF/CAT4/LED flasher antenna on the port flange designated 'HF'. Clean the groove beforehand. Take care that the rubber sealing ring completely resides in the circular groove otherwise water will enter the buoy. Fasten the 6 hexagon socket screws.

Power the buoy by flicking the switch. Check if the buoy has started by observing the flash lights. An even better way is to set up the receiving equipment and to monitor the buoy output on your PC. Datawell has also developed the Buoy Tester application to check whether all sensors on your buoy are working properly.

2.4 Buoy tester application

In order to troubleshoot your Waverider buoy before it is deployed we have developed the Buoy Tester application.
This application is free to download from the Datawell website:
https://datawell.nl/support/software/

2.5 Receiving antenna installation

Datawell supplies standard ground-plane antennas to receive all its models of wave buoys. These antennas are able to withstand strong winds and are protected against corrosion. The user should provide an antenna mast with the same properties. For optimum reception the antenna should overlook all surrounding buildings and have a direct line of sight to the sea. Consult local companies for lightning protection. Feed the antenna signal to the RX-C4 receiver through the high quality coax cable that is included in the GP antenna set. In less demanding circumstances a portable antenna can be used. If the portable antenna is used, the maximum range decreases to line of sight. It has a magnetic foot for easy fixation.

2.6 RX-C4 receiver

Connect the antenna coax cable to the connector on the back panel. Once you have applied power, the receiver will inform you of the buoy readings on the LCD display.
Datawell will tune the receiver to the transmitting frequency of the buoy.

2.7 Software

Measuring oceanographic parameters does not solely involve gathering data and logging it. To get a complete view of the governing conditions at sea, it is desirable to post-process and present the data as well. The oceanographic parameters measured with a Waverider are made available to the user by data transfer options like the HF-transmitter, GSM- and satellite links and data processing, storing and presentation software. The latter is taken care of by Waves5, the Microsoft Windows based software package developed by Datawell.

2.7.1 Waves5

Waves5 is compatible with any Datawell instruments listed below:

- Directional Waverider-MkIII (DWR-MkIII), stabilized platform accelerometer-based wave motion sensor (firmware versions 43M02B40, 43M02E40, and later).
- Non-directional Waverider-SG (WR-SG), stabilized platform accelerometer-based wave motion sensor (firmware versions 56M02B40, 56M02E40, and later).
- Directional Waverider 4 (DWR4), stabilized platform accelerometer-based wave motion sensor.
- Wave Unit, stabilized platform accelerometer-based wave motion sensor.

The receivers that Waves5 is compatible with are listed below:

- RX-C (HXV and HVA modes, both serial and Ethernet connections).
- RX-D (III-series instruments, HXV).

Furthermore, Waves5 is able to communicate with instruments via the telemetry options listed below:

- Iridium SBD.
- Iridium Internet and GSM Internet. IV-series can currently only acquire data and save it. Waves5 is not able to display the received data yet.

2.7.2 Quick-start guide

In this section, several quick-start guides can be found. They will guide the user through setting up the software such that it is ready for use.

2.7.2.1 Adding an instrument

Waves5 allows for multiple instruments to be configured. Adding an instrument is the first step required to start collecting data from your Datawell instrument. All configured instruments can be found in the navigation menu on the left hand side of Waves5.

In order to add an instrument, one can click the `Add instrument` item on the bottom of the navigation menu on the left hand side of Waves5, or navigate to `Instrument > Add instrument`. In both cases, the `Add Instrument Wizard` will be opened in a new window.

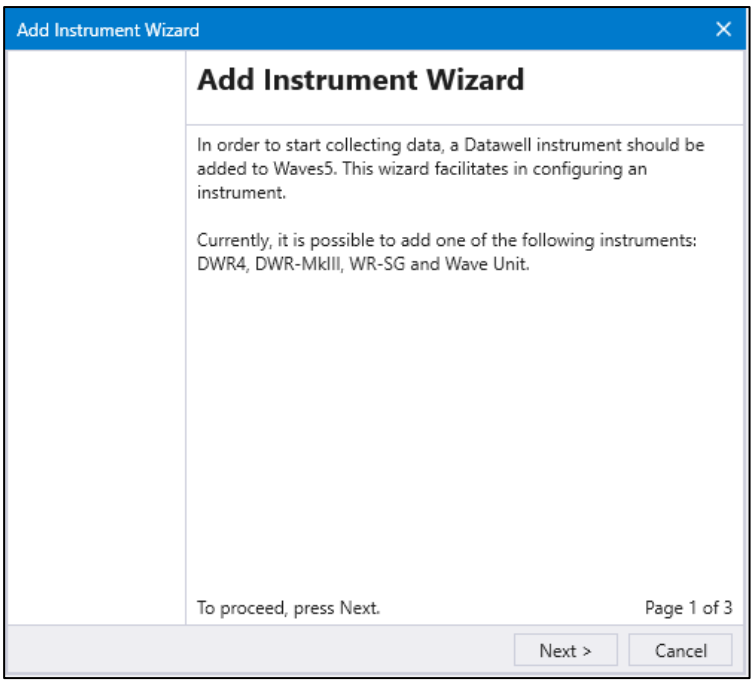

Figure 2.1 The splash screen of the Add Instrument Wizard.

Click Next. The wizard will ask for an instrument type. Currently it is possible to configure types of instruments:

- DWR-MkIII,
- DWR4,
- WR-SG,
- Wave Unit.

Furthermore, a display name will be required as an input. Waves5 uses this to distinguish between instruments. Files which are created will contain this identifier and a separate directory for each instrument will be created in the `Output` directory. It is advised to pick a name with high distinguishing power. If no display name is selected, the name will default to `Default Instrument`.

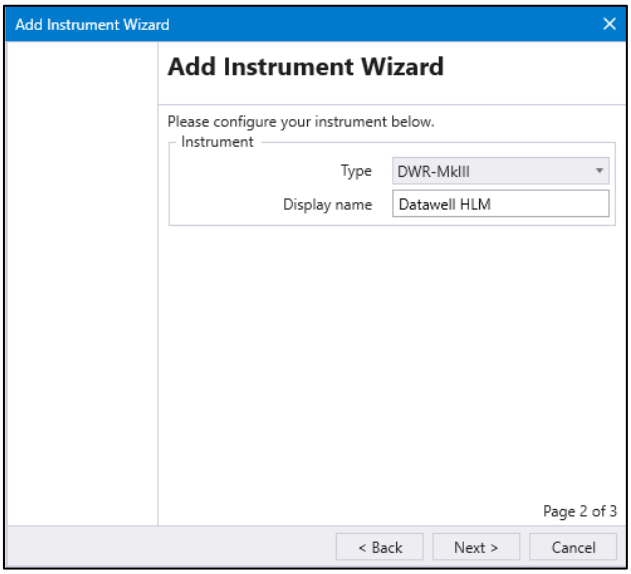

Figure 2.2 Select a type of instrument and a display name to distinguish between different instruments.

After adding an instrument, it should be connected to (a) receiver(s). This is explained in the next Section. The `Add Receiver Connection Wizard` will automatically be opened by clicking the `Add receiver` button in the wizard completion page. If the `Finish` button is clicked, the wizard will be closed.

2.7.2.2 Adding a receiver connection

On first start-up, Waves5 does not make a connection to a receiver. The connection should be configured in Waves5. In order to facilitate setting up a connection to a receiver, Waves5 includes an `Add Receiver Connection Wizard` which can be used after adding an instrument. Please note that when adding an Iridium SBD connection, mail accounts have to be added first. In this quick-start guide, an RX-C (Ethernet) receiver is added.

To access the wizard, select the instrument to which the receiver connection should be added in the left hand side menu, click `Instrument > Add receiver connection` in the menu bar. Additionally, after adding an instrument the `Add receiver` button can be pressed to automatically open the `Add Receiver Connection Wizard`. A dialog window will open. After a splash screen which explains what the purpose of the wizard is, information about the receiver which is to be connected is requested.

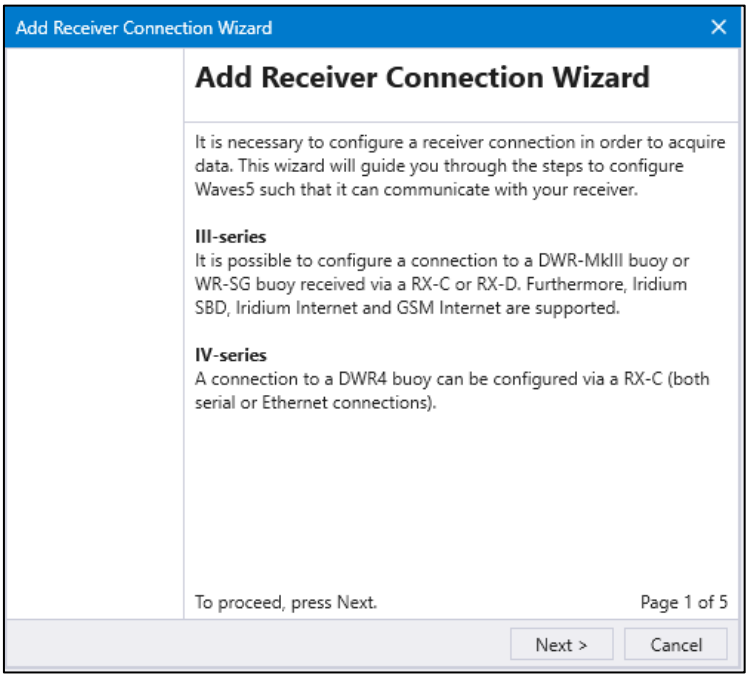

Figure 2.3 The splash screen of the Add Receiver Connection Wizard.

By clicking “Next” the receiver connection wizard will start. First, the type of receiver used to receive data with has to be selected from the dropdown menu. Only types of receivers which have not been added to the selected instrument can be added using this wizard, as an instrument can only be connected through one of each type of receiver. When a type of receiver is selected, the “Next” button is activated. The wizard will now prompt for some more information about the receiver, such as the serial port or IP address which is used to connect to the receiver.

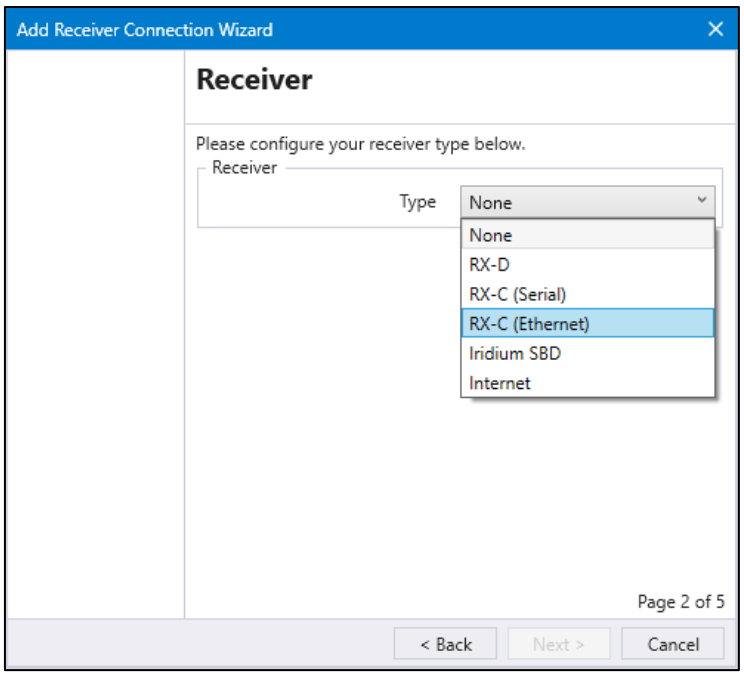

Figure 2.4 Selecting a receiver type in the Add Receiver Connection Wizard.

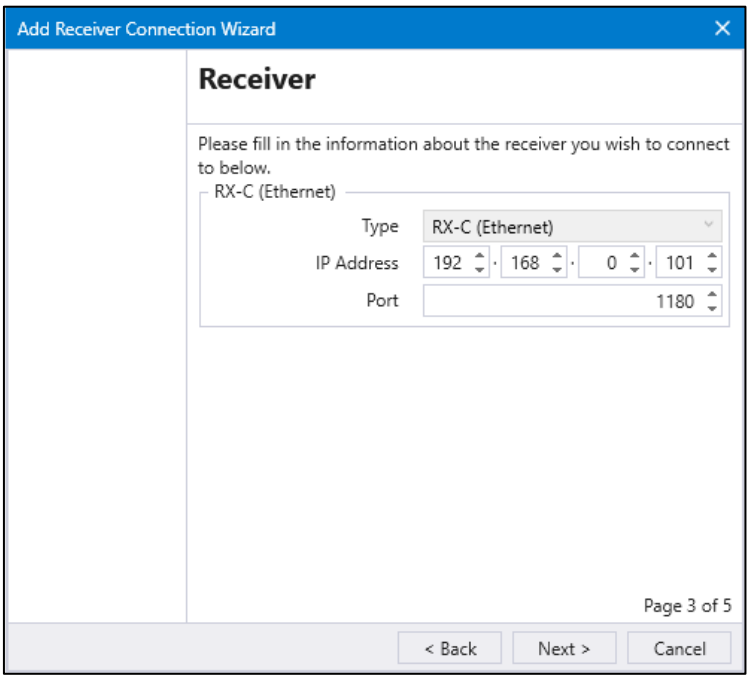

Figure 2.5 Selecting an IP address and Port in the Add Receiver Connection Wizard.

After selecting the IP address and Port, the receiver connection has been configured. The default values when configuring a receiver connection over Ethernet correspond to the default settings of the RX-C (Ethernet).

After clicking “Next”, the user will have the possibility to change the path used by Waves5 to save the files to which it generates as output. Clicking the folder icon opens a File Explorer window which can be used to select a folder on the user’s computer.

If the textbox is left empty, the default location to save data to is used. It can be found in the Application Data special directory on your computer. Navigating to it can be done by typing `%APPDATA%/Datawell/Waves5/Output` in a File Explorer window. The directory is only created when the first file is written to it. This is the case as soon as a connection over Ethernet is established, as a .HXV- or .HVA-file will be created upon receiving the first vector.

The files that are created will be stored in a subfolder `yyyy/MM`. If the default folder is used, files created in March 2021 will be stored in the `%APPDATA%/Datawell/Waves5/Output/`**`instrumentname`**`/2021/03` folder, where `instrumentname` is the name of the instrument.

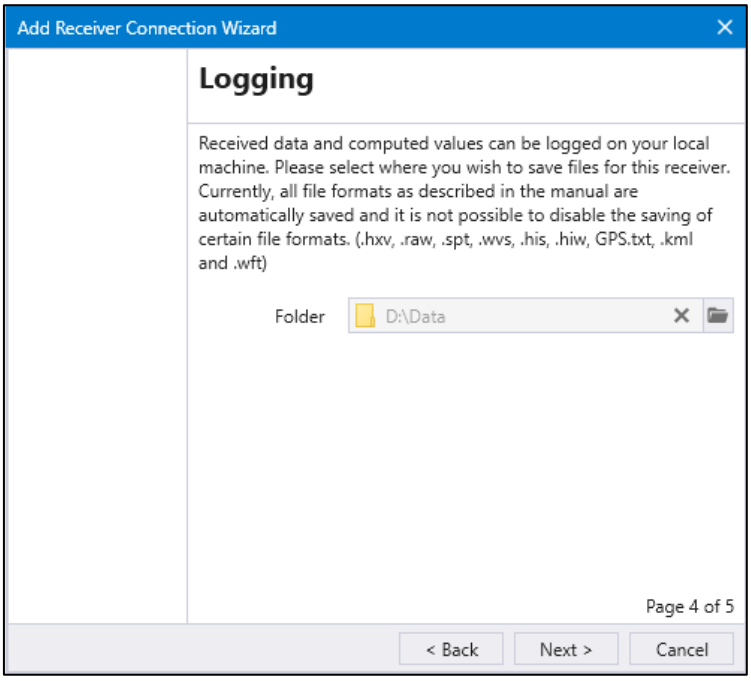

Figure 2.6 Selecting the (optional) path to the output directory in the Add Receiver Connection Wizard.

Thereafter, the wizard is completed. Clicking the "Finish" button will add the new connection and start the receiving of data using the new connection. If the added receiver type is RX-C or RX-D, the `Operational`, `Displacements` and `HF Receiver Status` panes will be opened upon completing of the wizard, such that the user can start working with their new receiver connection configuration immediately.

For further detailed information, please consult the Waves5 reference manual: https://datawell.nl/support/manuals/

2.8 Mooring preparation

Even though the mooring is no sensor by itself, it is a crucial part of a wave measuring system. It solves the paradox of keeping the buoy on its location while at the same time allowing the buoy to follow the orbital wave motion.
Your mooring has been shipped to you pre-assembled as far as possible. The only things you have to do are:

(1) adjust the Polypropylene line to the correct length and attach the yellow float according manual and connect the terminals
(2) attach the mooring weight or chain to the PP- rope according manual
(3) connect the PP- rope end with the yellow float to the anchor weight using the 25 mm shackle provided and connect the other end to the rubber cord.
(4) connect the rubber cord to the buoy chain
(5) connect orange float(s) if required (only for mooring depth 8-34 m DWR or 8-17 WR)

After fastening the nut on the shackle bolt it must be secured from unscrewing by applying a split pin. Push both legs of the split pin through the hole in the bolt and bend them back, one leg round each side of the bolt. Bring a suitable pair of pliers and a few spare split pins (included).

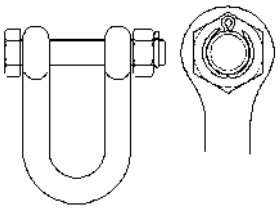

To avoid entangling the mooring line, lay it out on the deck of the ship as a stack of ‘eights’. To keep everything in place you may tie a rope around the waist, leaving one loop of the ‘eight’ on either side, and two ropes through the two loops itself. If you are taking off rope or wire from a reel, do not slide off loops on the side but unroll the reel. Sliding off line will build up a torque that may set the buoy spinning and damage the sensors of the Waverider buoy.
In practice, all these actions will be taken when the ship has already left the port. However, to avoid problems at sea please inspect the mooring once before you actually deploy the buoy. If this is your first buoy deployment, lay out the mooring on land at ease as an exercise, study it and pack it into the blue containers again.

2.9 Buoy Deployment

Now that you have set up and checked the equipment on land, it’s time to deploy the buoy. A safe and successful deployment requires the right equipment and a well-thought out procedure. Bring a few ropes and a knife, they always come in handy. Also bring a used car-tire to support the buoy while on deck. Still the buoy must be roped to the railing. If you have a Buoyfinder you can use it to monitor the buoys outputs. Alternatively you can radio contact your receiving station during deployment. The best time to do this is after the buoy is deployed on its location and before the ship will return to port. To handle the mooring weight, either a ship with a hoisting crane or U-frame or a ship with a removable railing should be chartered. For comfortable deployment a day with small waves is best waited for. The procedure below, see pictures, is suggested for a small vessel with a hoisting crane or removable railing in the front. Users should adapt the procedure to size and outfit of their ship and according to their own experience. Before the actual deployment lay out the mooring line on deck and connect it to mooring weight and buoy using the shackles and split pins. Never stand inside the loops of the mooring line or between the mooring line and the ship sides. Hoist the mooring weight on the side of the ship and hang it overboard on a rope or push it towards the removable railing. Release the mooring weight from the hoisting crane and leave it hanging overboard. Once you are at the intended location steer the ship in reverse backing up slowly against the current. This manoeuvre will keep the mooring line out of the screw propeller. Deploy the buoy by hoisting or pushing it overboard, keep in mind that the buoy should not spin more than 10 times as this may cause damage to the sensor inside the buoy. If you hoist the buoy use an extra piece of rope

to keep the crane hook at a distance from the antennas and sensors mounted. To release, cut the rope. Feed the mooring line loop by loop while the buoy drifts away from the ship and finally cut the rope that carries the mooring weight or push the mooring weight overboard. Continue to back up until the ship has gained enough distance to steer clear of the buoy and mooring line.

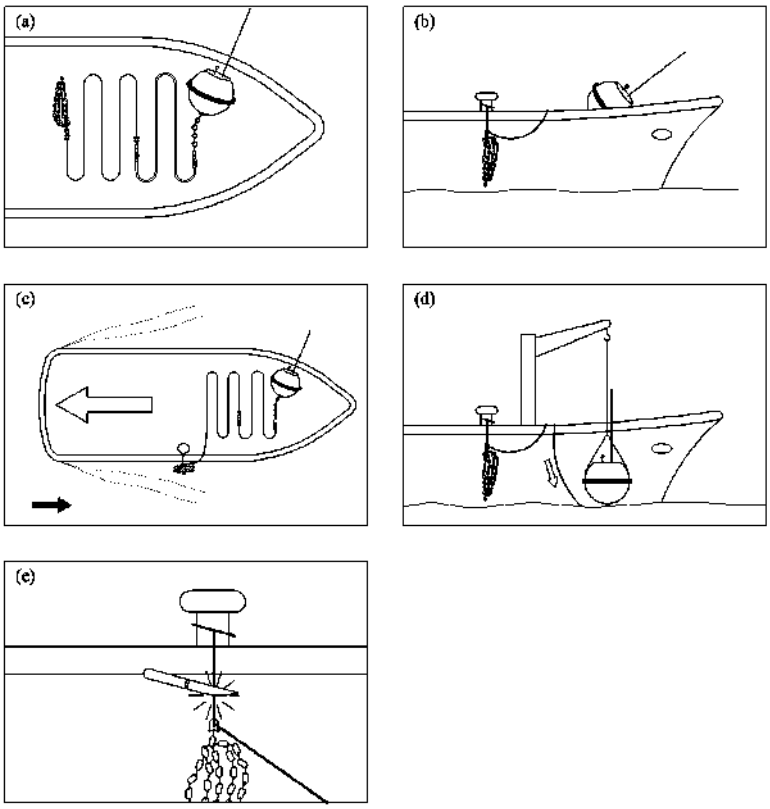

Should anything go wrong, do not recover the buoy by pulling on the rubber cords. This is dangerous. If you can reach the polypropylene rope, you may pull directly at this point. If you necessarily have to recover the buoy and you can only reach the rubber cords, cut the rubber cord.

2.10 Buoy Recovery

IMPORTANT – During the recovery process the most dangerous item is the rubber cord(s). Stretching the cord(s) increases the level of danger and should be avoided whenever possible.

There are several techniques for recovering a Waverider buoy. The most suitable method on any particular occasion will depend on the location, the weather, the sea state, the type/size of vessel being used, the availability of substitute equipment and, sometimes, operator experience/preference.

The general methodology is to recover the buoy first, then the rubber cord(s) and finally the mooring weight, which should be lifted via the polypropylene rope. **Do not lift the mooring with the rubber cord(s).**

The rubber cord is a valuable item. Minimise the risk of damage after recovery by handling it carefully and stowed away from operating areas as soon as practically possible.

(a) Method - Exchanging Waverider buoys at the same location

If the operating vessel has the ability to maintain its position in relationship to the Waverider mooring **without extending** the rubber cord during the recovery process, this is the quickest method of exchanging a buoy deployed at the same mooring:

Lift the buoy from the water using a rope bridal, connected between the two handles fitted to the upper half of the Waverider buoy hull, do not use the handles on the hatchcover as these are not

designed for lifting the entire weight of the buoy. Steady or anti-spin lines can be attached to the safety triangle during the lifting procedure. Stow and secure the buoy on the vessel deck. Secure the mooring to the deck at the upper end of the Polypropylene rope.
Disconnect the mooring between the chain coupling of the buoy and the rubber cord terminal.
Connect the mooring to the chain coupling of the replacement buoy, ensuring that the safety shackle is correctly fitted and securely locked with nut and split pin.
Free all securing lines to the mooring and the Waverider buoy, lift the buoy and lower back onto the water.
During the above operation a member of the recovery team, equipped with a knife, should be stationed close to the secured rubber cord. Should any sudden vessel movement increases the tension in the rubber cord and endanger the recovery personnel, the rubber cord must be severed.
It should be noted that this mode of operation may only be used where the ship is able to maintain its exact position within a couple of meters. Additionally this method does not allow all the mooring to be fully inspected (the rubber cord(s) for cuts and polypropylene rope for wear). If this method is regularly used, increased inspections of the complete mooring must be undertaken.

(b) Method - Recovery using a dummy buoy
Where there is no replacement Waverider buoy, a dummy buoy can be deployed to support the mooring thus avoiding the need to retrieve the complete mooring. An old Waverider equipped with an operating flashlight may be used as a dummy buoy. In this instance the exchange procedure described in a) above has to be applied twice.

(c) Method - Recovery using a small work boat, rib or dingy
The Waverider cannot be lifted onto a small workboat or rib. However, such a vessel may be used to tow the Waverider buoy to a larger vessel or ashore. Mooring recovery will be by hand, ensuring that no tension is placed on the rubber cord(s). Recovery of the mooring clump weight must only be achieved by using the polypropylene rope.
If the mooring clump weight cannot be recovered, the polypropylene rope may be cut below the rubber cord leaving the clump weight and residue rope on the seabed.
<u>The Waverider should not be towed at speeds greater than 2 m/s (4 kn).</u>
By using this recovery method, the cost of the loss of a section of mooring line and clump weight would be more than offset by the savings made in not chartering a ship. However, leaving the PP line and mooring weight on the seabed could potentially cause damage to the environment.

3 Specifications

Table 3.1 contains the specifications of the DWR4 buoy.

Table 3.1. Specifications of the DWR4.

Parameter	Value
Heave	
Range	−20-+20 m
Resolution	variable, 1 mm smallest step
Scale accuracy (gain error)	< 0.5 % of measured value after calibration < 1.0 % of measured value after 3 year
Zero offset	< 1 cm
Period time	1.0 s-30 s
Direction	
Range	0º-360º
Resolution	0.1º
Reference	magnetic north
Buoy heading error	0.4º-2º depending on latitude, typical 0.5º
Period time in free floating condition	1.0 s-30 s
Period time in moored condition	1.0 s-20 s
Filter	
Sampling frequency	5.12 Hz
Digital filtering type	phase-linear digital FIR filter
Measurement to HF data output delay (includes all filter and buffer delays)	130 s +/− 10 s
Data output rate	2.56 Hz
Bandwidth	0.037-0.997 Hz (-3dB)
Passband flatness	better than 0.005dB
Stopband suppression	better than 70dB
Extreme temperatures	
Operating (in water)	−5 ºC-+35 ºC (water temperature)
Long term storage (indefinite)	−5 ºC-+40 ºC
Short term storage (days) min	See **section 6.1**
Short term storage (days) max	55 ºC max

Table 3.2 lists the specifications of the Acoustic Current Meter.

Table 3.2. Specifications of the Acoustic Current Meter.

Parameter	Value	
General	Algorithm:	Doppler
	Sensors:	three 2 MHz acoustic transducers
	Ping power:	17.5W
	Ping duration:	1ms
	Cell size:	0.4 m - 1.1 m from sea surface
	Update rate:	every 10 minutes
	Avg. interval:	64 seconds
Current velocity	Range:	0 - 300 cm/s, resolution: 1 mm/s
	Accuracy:	1% of measured value +/- 2 cm/s
	Std. (1σ):	1 - 3 cm/s
Current direction	Range:	0° - 360°, resolution 0.1°
	Accuracy:	1.4° - 3° (depending on latitude) typical 1.5°
	Std. (1σ):	<5° for velocities >0.2m/s

4 Location of components

This chapter presents an overview of the components of your wave measuring system and their location. It's subdivided into two sections about the hull and the hatchcover. A brief description is given.

4.1 Hull

The DWR4 hull is either available as AISI316 or Cunifer10. The hatchcover is always made of AISI316. On the outside of the hull you will find, from the bottom up: the mooring eye, three acoustic transducers (in case of the ACM option), temperature sensor, fender fitted with anti-spin triangle, handles and flange with groove and rubber sealing ring and forward ship (FS) reference. The FS reference corresponds to the compass heading and is in fact a small planed face on the side of the flange See Figure 4.1 on the next page.

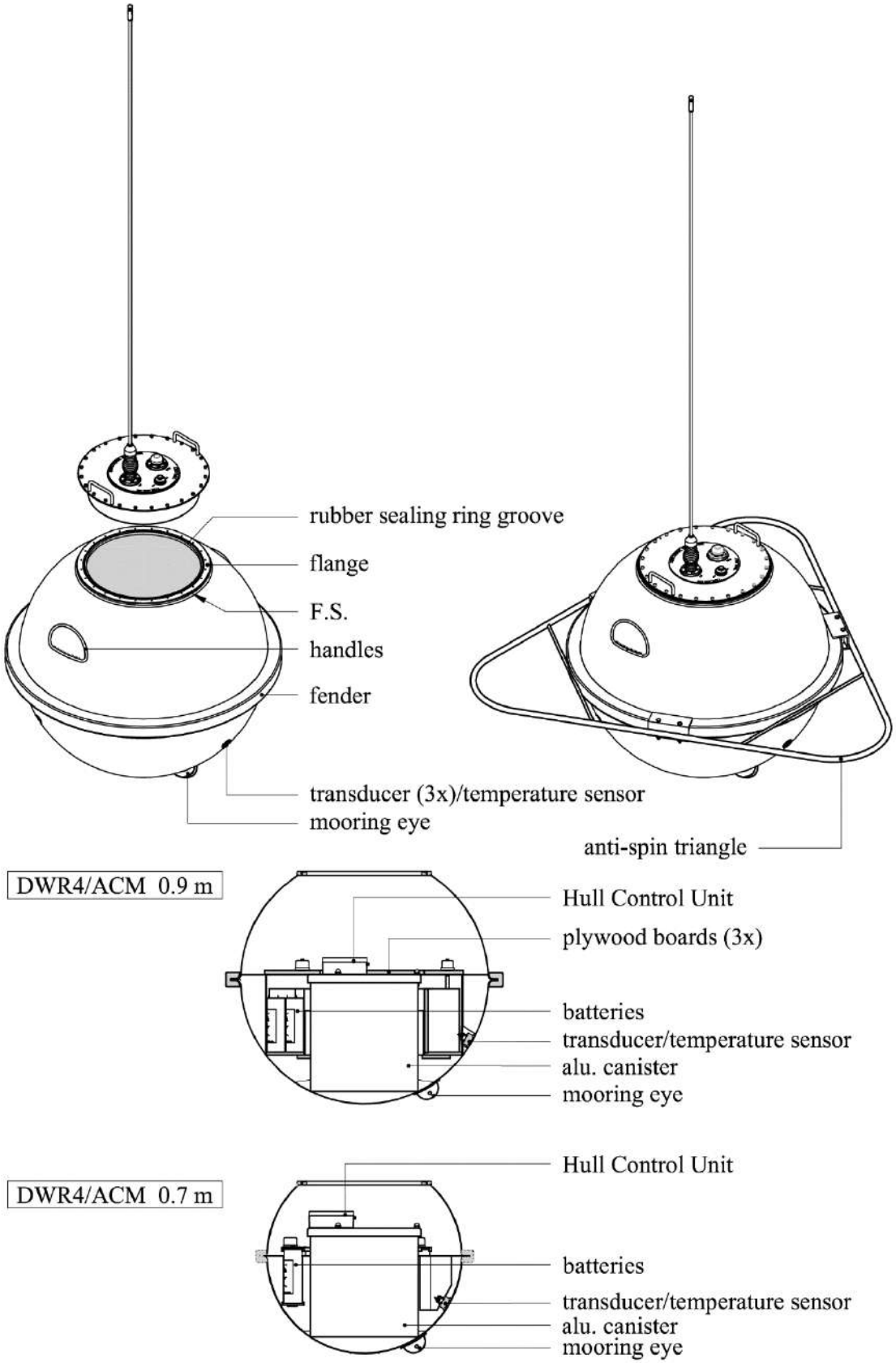

Figure 4.1 Rendering of the hull components.

In general the hull contains several compartments of batteries surrounding an aluminium can, an aluminium lid, plywood or PVC boards to keep everything in place, bags of drying agent, the hull control unit for testing each battery section, and finally a main cable with the hatchcover connector, to connect to the electronics unit. The DWR4 buoy has a 14-pin connector. The functionality of each part is explained below:

Mooring eye	Placed eccentrically to keep the buoy horizontal during high currents so that the three acoustic transducers are always measuring in the horizontal plane and preferred orientation.
Transducer (3x)	The acoustic transducers all face 30 degrees down and are 120 degrees laterally apart. Each transducer measures the projection of the current velocity along its axis.
Temperature sensor	Temperature sensitive resistor (NTC) which measures the water temperature. Located next to transducer 1 (if applicable) near the mooring eye.
Fender	Rubber fender which protects the hull from small collisions and damages.
Hull control unit	The hull control unit has several functions. The battery voltage of each section installed can be measured at this unit. Also the three acoustic transducers are connected to this unit (if an ACM option is installed) and the seawater temperature sensor is connected to this unit.
Anti-spin triangle	Prevents the buoy from spinning. Spinning can damage the vertical accelerometer beyond repair. It also protects the three acoustic transducers from external damage.
Handles	The handles on the hull are used to lift the buoy. Use both handles to lift the buoy. Never lift the buoy using the handles on the hatchcover!
Serial number	One serial number identifies the buoy. It is printed on top of the Hull Control Unit inside the buoy (as well as on top of the hatchcover).
Flange	Contains 24 screw holes to close the buoy with hatchcover.
Rubber sealing ring groove	This groove must contain a rubber O-ring to seal the buoy and make it watertight.
Aluminium canister	The aluminium canister houses the motion sensor package. The motion sensor package consists of electronics boards, a fluid-filled sphere with the stabilized platform and vertical accelerometer, a two-axial accelerometer and a three-axial fluxgate compass, see Figure 4.2.
Batteries	Non-magnetic Alkaline batteries of 270 Wh each (RC27B).
Plywood boards (DWR4/ACM 0.9m)	Keeping the batteries in place.
PVC boards (DWR4/ACM 0.7m)	Keeping the batteries in place.

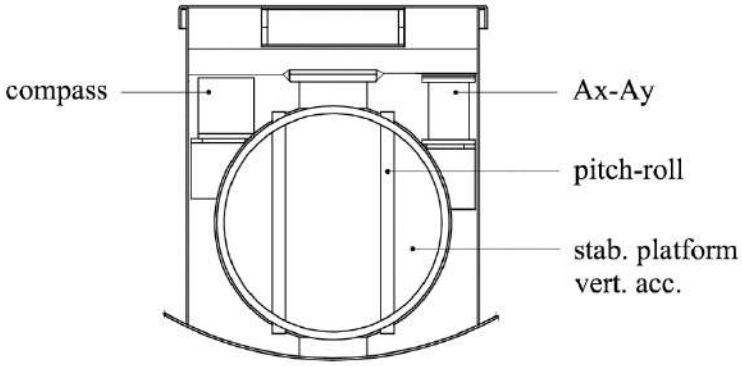

Figure 4.2 Contents of the aluminium canister inside the DWR4.

4.2 Hatchcover

The electronics unit has been designed from the point of view of modularity. A range of printed circuit boards each with its own functionality and its own location will fit in the unit. Figure 4.3 schematically shows the location of the boards; the interconnecting ribbon cables and coaxial cables are not shown.

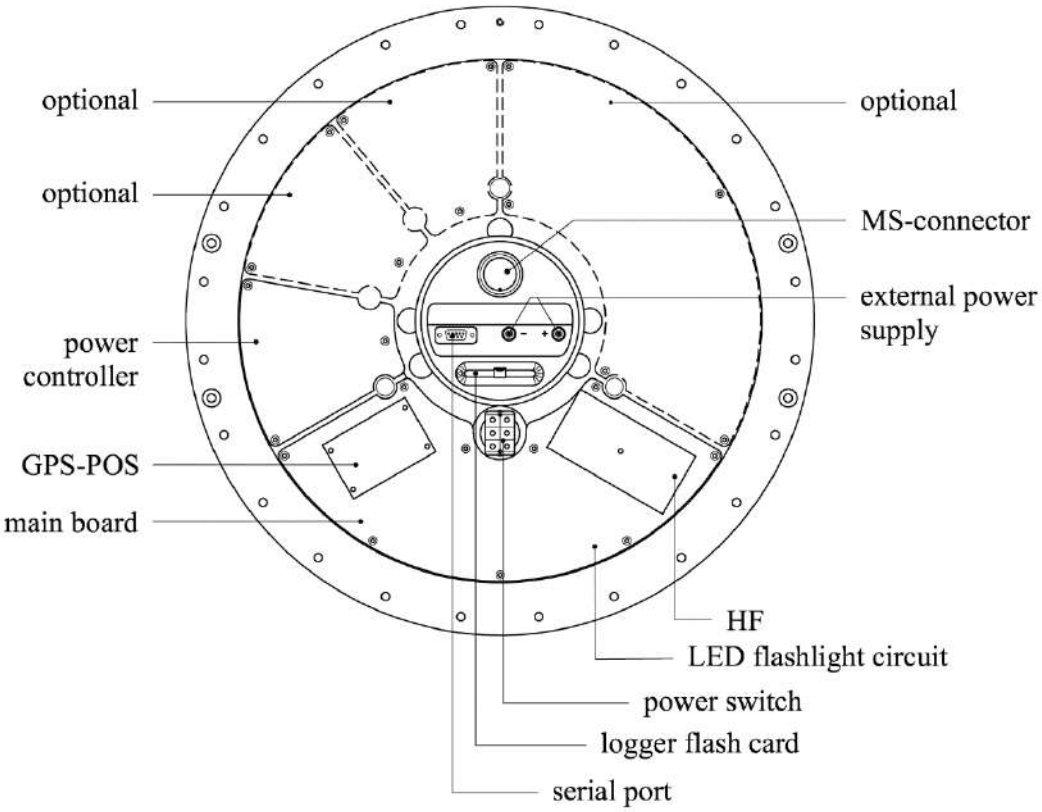

Figure 4.3 Schematic drawing of the printed circuit boards (pcb) on the inside of the electronics unit and the connector block in the middle.

The functionality of each part is explained below:

Main board	Main pcb which contains the HF transmitter, GPS receiver, processor and electronics for the flashlight (HF) antenna.
GPS-position	GPS receiver pcb for global positioning.
LED	Electronics section for the flasher of the HF antenna.
HF	HF transmitter module adjusted to the customers preferred frequency.
MS-connector	Connection between hatchcover (electronics) and hull (electronics) and powers up the buoy.
External power supply	External power supply of 10 – 30 VDC can be connected to these plugs. Is used for testing purposes. The external supply will also take over from the internal battery source if its voltage exceeds that of the batteries.
Serial port	RS-232 connection. Used for fault finding and testing.
Data logger	2 Gb flashcard which stores the recorded data (BVA files).
Drive activity LED	Lights up whenever data is written to the data logger. Power may only be removed when the drive activity LED is switched off.

Two hatchcover versions exist: one with two and one with three ports. These ports are designated HF (whip antenna with LED flasher), GPS (GPS antenna) and, in case of three ports, the third port is designated either Iridium or Argos, consistent with prefixed cabling below. All ports require a rubber sealing ring for waterproof sealing. The ports are centred on the hatchcover leaving enough separation to avoid contact and interference between the antennas, Figure 4.4.

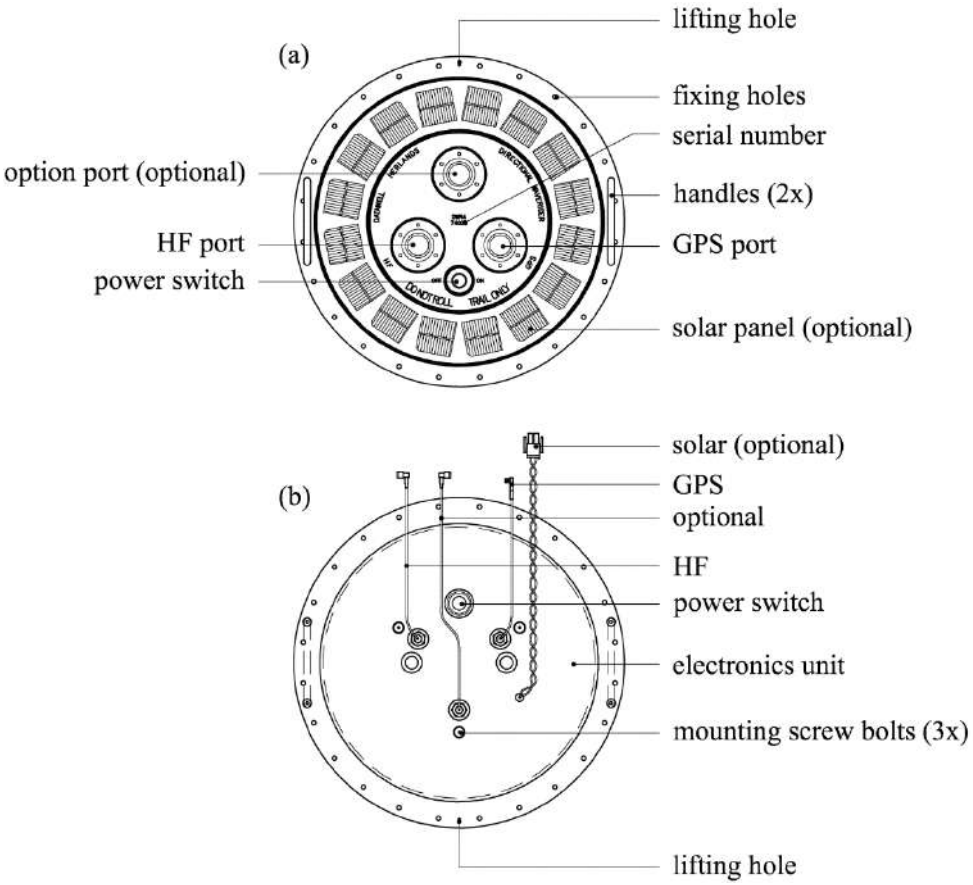

Figure 4.4 Drawing of the hatchcover components, (a) top side and (b) bottom side.

To close the hatch 24 hexagon socket screws are used. When opening in case of under pressure, the hatchcover can be lifted by using the threaded hole and one of the screws. See Figure 4.5.

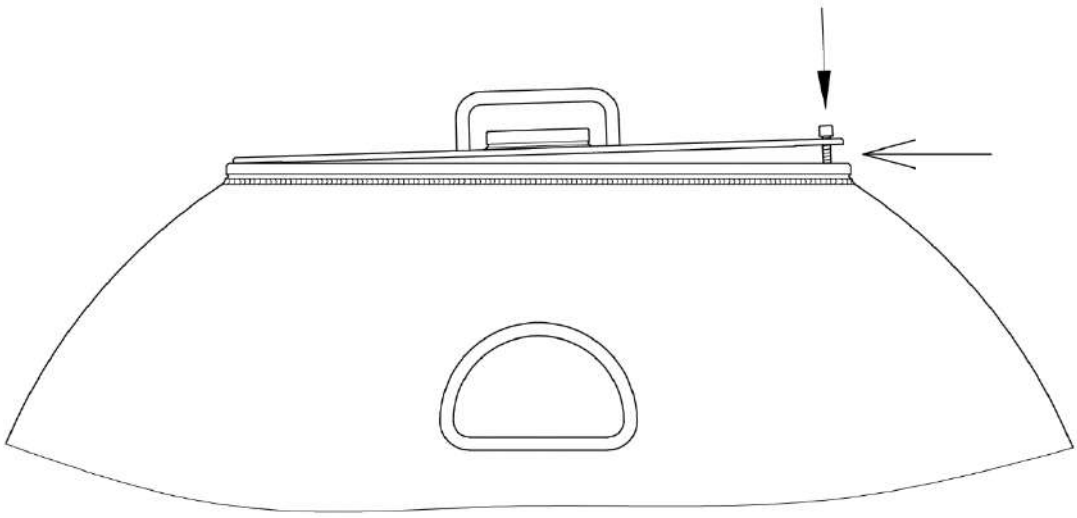

Figure 4.5 Opening the hatchcover by using a screw in the lifting hole.

4.2.1 Orientation hatchcover DWR4(/ACM) 0.7m

Since the lack of space inside the hull of the DWR4(/ACM) 0.7m, the hatchcover can't be installed with 360° freedom. Therefore, it is important to mount the hatchcover as shown in Figure 4.6. Make sure to align the hatchcover handles with the handles of the hull, and the power switch is opposite of the forward ship (F.S.) reference on the small planed face on the side of the flange.

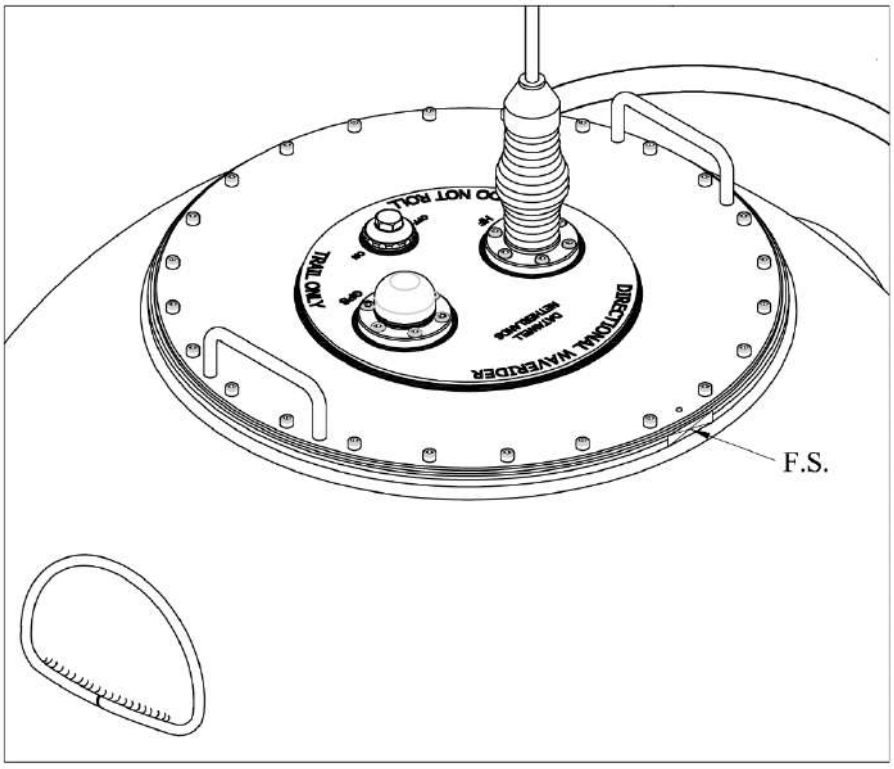

Figure 4.6 Correct orientation of the hatchcover.

4.3 Antennas

The antennas are also part of the modular design of the DWR4. Not only will it be possible to replace antennas with upgraded versions, but you may also extend buoy functionality with future option. Figure 4.7 shows the antennas that are currently available.

Mounting an antenna on a port is straightforward. Make sure antenna and port are clean and dry. Check if the rubber sealing ring is in place and lower the insert in the port, allowing the connectors to centre. A slight tolerance on the antenna connector will accommodate small misalignment. The connector inside the port is waterproof. This means that water will not enter the buoy if your antenna is leaking (after a collision or if the rubber sealing ring is absent). Nevertheless, electrical short-circuits may stop the buoy from functioning. Blind covers are available to cover unused ports. Use the 6 hexagon socket screws to fasten the antenna, see Figure 4.8 on the next page.

The port labelled GPS is intended for a GPS position antenna. Argos, Iridium and the GSM antenna will be mounted on the unlabelled option port, see Figure 4.4.

The modular design of the electronics unit and the ports on the hatchcover already provides for these options and allows easy upgrading of your wave measurement equipment.

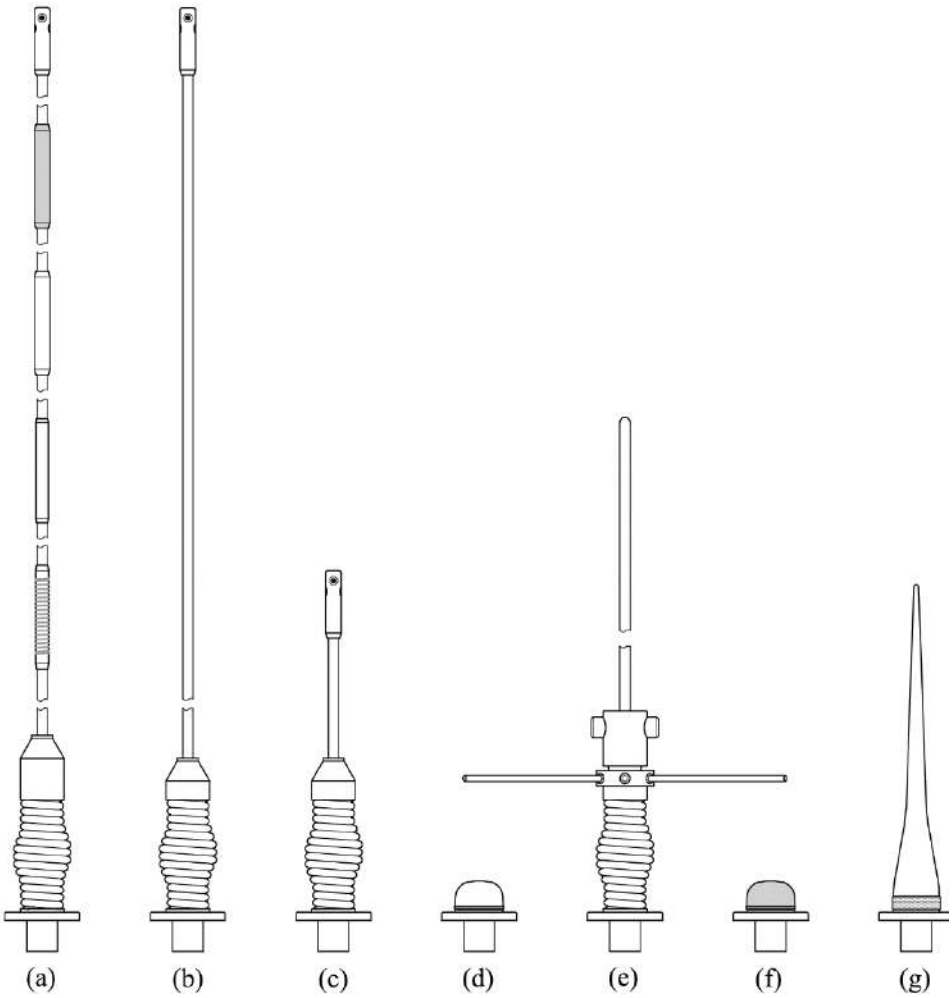

Figure 4.7 Different types of antennas: CAT4/HF whip including LED flasher(a), HF whip including LED flasher(b), LED flasher only whip(c), GPS position(yellow)(d), Argos(e), Iridium(black)(f), GSM(g)

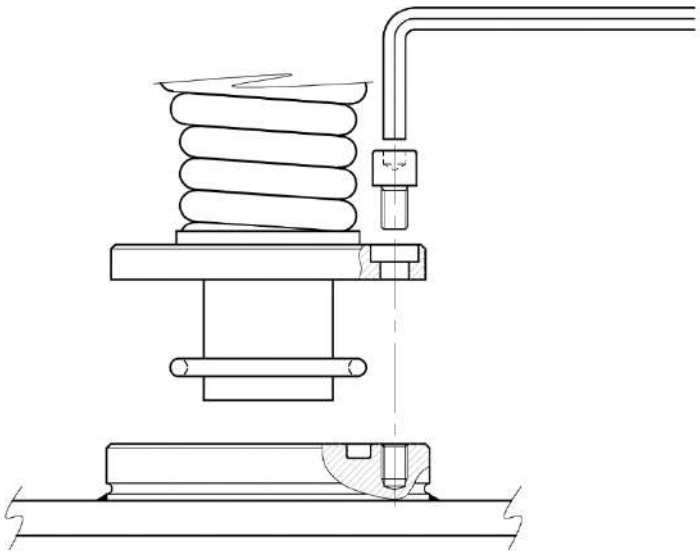

Figure 4.8 Illustration of how to fix an antenna or sensor option to a port. Please make sure the rubber sealing ring is in place.

5 Transportation

5.1 Transport frame

For protection and handling, the buoy should always be shipped in a transport frame. The transport frame holds the complete buoy and the stabilizing chain including anodes (anodes only on stainless steel buoys). Small option inserts, such as the Argos antenna, service parts kit and manual are packed in the hull of the DWR4 0.9m during transport. For the DWR4/ACM 0.7m these parts are packed separately in a carton.
The long HF/LED whip antenna and the anti-spin triangle must be packed separately for transport. The corresponding option ports are covered with blind flanges. Figure 5.1 depicts the transport frame with a DWR4(/ACM) 0.9m.

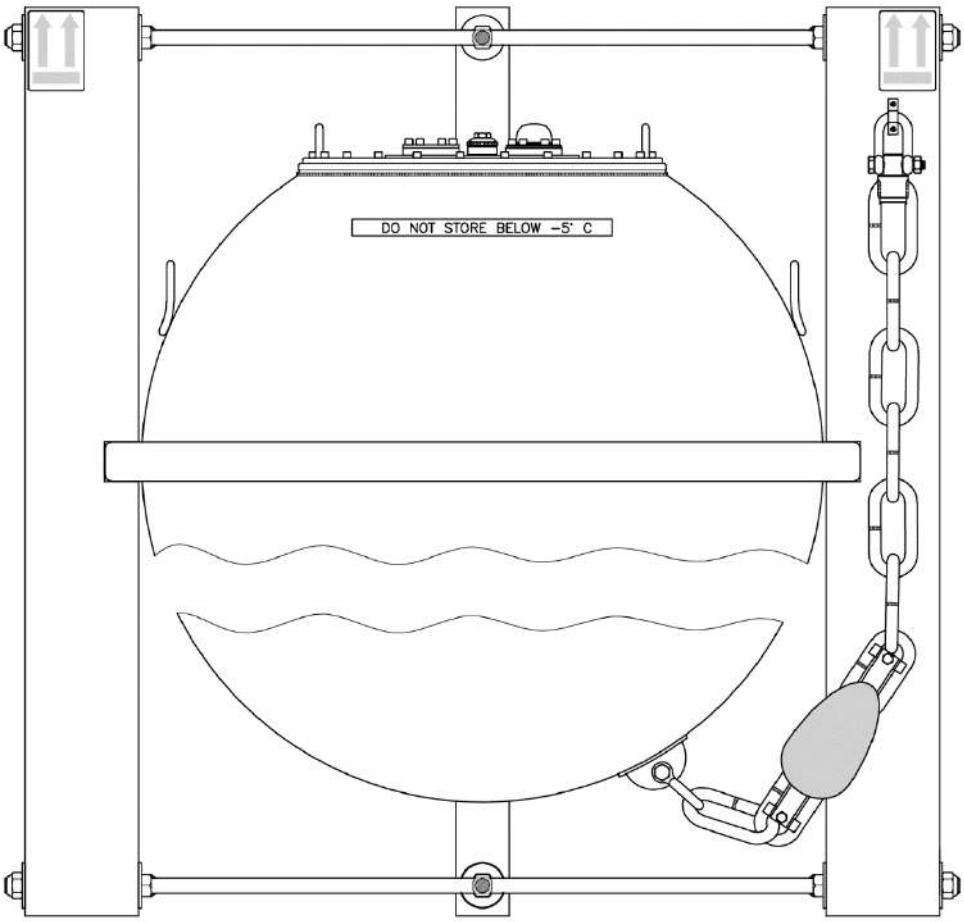

Figure 5.1 Datawell transport frame with DWR4/ACM 0.9m buoy

5.2 Weights and dimensions

For safe transportation the buoy must be packed in the packing frame in which it originally arrived. It is advisable to leave the buoy in its packing frame during all transport. To take the buoy out of the frame, just remove one of the poles and slide the buoy out of the frame. Use a hoisting crane to support the buoy. For handling and transport see Table 5.1 with dimensions and weights.

Table 5.1. Buoy and packing frame weights and dimensions.

Buoy	0.7m		0.9m		0.7m		0.9m	
	DWR4/ACM		DWR4/ACM		DWR4		DWR4	
Approximate buoy weight including batteries, antennas and chain	110 Kg AISI316	116 Kg Cunifer10	188 Kg AISI316	199 Kg Cunifer10	112 Kg AISI316	118 Kg Cunifer10	261 Kg AISI316	270 Kg Cunifer10
Packing frame weight	35 Kg		45 Kg		35 Kg		45 Kg	
Frame height	1.20 m		1.42 m		1.20 m		1.42 m	
Frame width/buoy width (including fender)	0.78 m		1.0 m		0.78 m		1.0 m	
Buoy height (as transported,south pole-hatchcover handles)	0.73 m		0.95 m		0.73 m		0.95 m	

6 Storage

6.1 Sensor fluid temperature

A Datawell accelerometer based buoy must not be stored below temperatures of −5 ºC. This is determined by the freezing temperature of the fluid surrounding the stabilized platform and vertical accelerometer sensor. While the buoy is deployed at sea, the temperature of the sensor fluid mainly depends on the water temperature and to a small extent on the air temperature, thus preventing the sensor fluid to freeze.

However, during handling, storage or transport, it may be inevitable to expose the buoy to temperatures lower than −5 ºC. On a short time scale this is acceptable as long as you consider the following: The time constant τ of heat transfer from the sensor to the outside is about τ = 70 hours. Therefore, it takes a considerable amount of time (depending on the initial temperature of the sensor and the ambient temperature) for the sensor to cool down to the critical temperature of −5 ºC. The following equation can be used to calculate the maximum storage time

$$t_{\max storage} = \tau \ln\left(\frac{T_{so} - T_a}{-5\ ^oC - T_a}\right)$$

where

$t_{max\ storage}$	= time it takes for the sensor to cool down to −5 ºC (hours)
τ	= time constant of 70 hours
T_{so}	= initial temperature of the sensor (ºC)
T_a	= ambient temperature (ºC)

For example if the buoy has not been below T_{so} = +2 ºC, it can be safely stored at temperatures down to T_a = −20 ºC for up to 24 (26.8) hours.

7 Wave height and direction

7.1 Principle of measurement

7.1.1 Wave height

The DWR4 measures wave height by means of a single accelerometer. The sensitive axis of this accelerometer points in the vertical direction. After filtering and double integration of the acceleration signal the motion of the buoy, hence the wave motion is obtained. The strength of the Datawell principle is its gravity-stabilized platform. This patented principle is unique and we will come to the advantages below. Essentially, the platform is formed by a suspended disk in a fluid of equal density. By means of a very small metal weight the disk is made gravity sensitive. The large mass of the fluid in combination with the small force of the metal weight makes a pendulum with a natural period of 40 s, corresponding to a pendulum length of 400 m. This platform remains almost horizontal under any movement which can be expected at sea. Mounting the accelerometer on this stabilized platform makes the measurement of wave height through vertical acceleration straightforward.

7.1.2 Wave direction

Wave direction is determined by measurement of the horizontal motion of the buoy and correlating this motion with the vertical motion of the buoy. Two mutually perpendicular accelerometers are mounted in the DWR4 which measure the horizontal buoy motion in case the buoy is in the upright position. In case of tilt, the pitch and roll angles are determined by coils around the sensor sensing the electromagnetic coupling with a coil on the stabilized platform. With the help of the pitch and roll sensors the measurements of the above mentioned acceleration sensors are transferred to real horizontal acceleration. With the help of a fluxgate compass the acceleration in buoy-coordinates is recalculated to north-west-coordinates.

The strength of the Datawell principle is that it has kept the vertical acceleration out of all the transformations, thus ensuring that you get the best wave heights possible.

7.2 Wave motion sensors

As mentioned the three dimensional wave motion is essentially measured by three accelerometers. Tilt angles in two directions are measured for levelling and a three-axial compass is used for referencing to the local magnetic north. In total 8 motion sensors are employed, contained in three instruments. They are described separately below.

7.2.1 Vertical accelerometer

Instead of an orthogonal set (x,y,z) fixed to the buoy axes, the set (x,y,v) is used where the vertical is 'fixed' to direction of gravity. To 'fix' the vertical accelerometer it is mounted on a stabilized platform suspended in a fluid-filled sphere. This design assures that the platform remains horizontal under pitch and roll and even under horizontal accelerations.

The accelerometer itself consists of a thin lever having its tip between two electrode pads. The volume between the electrodes is filled with a conducting fluid. A voltage difference is applied over the electrodes and results in a voltage gradient in the fluid. Depending on the acceleration the lever bends and its tip senses the local voltage. The voltage is proportional to the excursion, which is proportional to the accelerations. This design resembles a potentiometer.

7.2.2 Horizontal accelerometers

Both x- and y-accelerometers are contained in a small stainless steel can. Their axes are fixed to the buoy. The accelerometer design is identical to that of the vertical accelerometer.

7.2.3 Pitch and roll

As described, pitch and roll are measured through magnetic coupling between the pick-up coil on the platform inside the sphere and the respective pair of pick-up coils outside the sphere. Also these sensors hardly require service ever.

7.2.4 Magnetic compass

The fluxgate compass measures the components of the earth magnetic field in three perpendicular directions referenced to the buoy frame: x-, y- and z-axis. The compass consists of an aluminium cube with three holes in three mutually perpendicular directions. In each hole a magnetic field sensor is placed. This part requires hardly any service ever.

7.3 Buoy axes and references

The DWR4 motion sensor package measures 8 observables: 3 accelerations A_x, A_y, A_v, 3 magnetic field strengths H_x, H_y H_z, and pitch and roll. Figure 7.1 defines the directions of x, y, z and vertical axes. All directions are referenced to the buoy FS plane (y) and normal (x), the axis of rotation (z) fixed to the buoy and the vertical axis (v) determined by the force of gravity.

Suppose you were facing the buoy FS plane. Tilting the buoy towards you would result a positive pitch and a negative x-acceleration or A_x output. Note that an accelerometer sensor actually is a force sensor and that with a tilted buoy the force of gravity will act as an inertial force. If you add that the direction of acceleration is opposite to the direction of the inertial force or gravity force, you can see why A_x is negative. Similarly, tilting the buoy towards the left would result in a positive roll and a positive y-acceleration or A_y output. Considering an upright buoy, if the positive A_x direction would point towards the north then the positive A_y direction would point westward and the positive z-axis would be directed upward. Double integration would yield north, west and vertical motion.

The signs of the compass outputs correspond to the positive x-, y-, but negative z-direction. Directing the FS plane towards the north will yield a positive H_x and zero orientation. Looking from above a right angle clockwise rotation yields +90º orientation and a positive H_y. Note that the H_z-axis is fixed to the hull whereas the A_v-axis always points up and is fixed to the stabilized platform.

For a tilted buoy the orientation is the same as for an upright buoy, which may be verified by tilting the buoy.

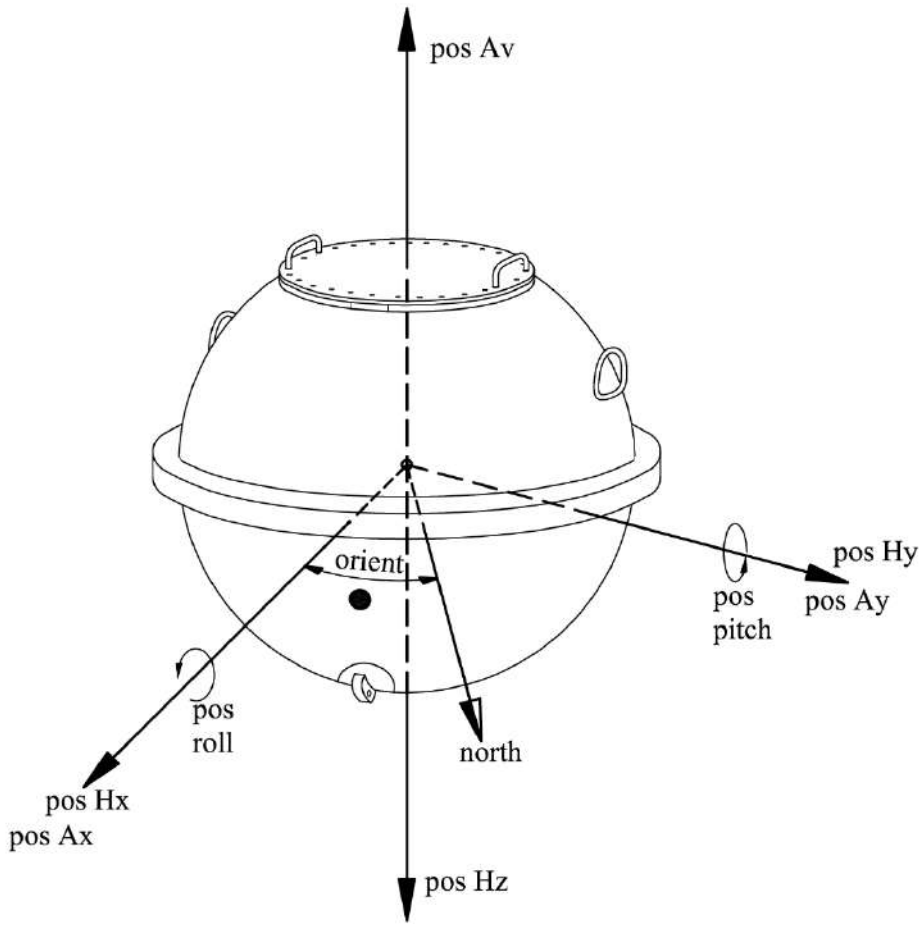

Figure 7.1 Definition of the axes and signs of the DWR4 motion sensors.

7.4 Data processing

The DWR4 generates raw north, west and vertical displacements at a rate of 2.56 Hz (internal sampling is done at 5.12 Hz). Displacements refer to excursions from the average position and should not be mistaken for position changes relative to the previous position. The raw data is stored on the logger flash card (BVA files) and output through the radio link (HVA files). However, the buoy also outputs processed data through the radio link or via communication satellite. Processed data are much more compact, nevertheless they still give a good impression of the sea state. Especially for the limited data transmission capacity of satellites, the processing and compressing is essential. The processing method is the topic of this section.

In oceanography the use of Fourier spectra of the vertical displacements to represent the wave conditions is wide-spread. The power spectral density PSD thus obtained quickly shows what wave amplitudes occur at what frequencies. The first part of this section is devoted to this straightforward Fourier spectrum calculation and applies to all Waveriders. In the second part we will deal with a more sophisticated Fourier analysis that also incorporates the horizontal motion. Now also information on wave ellipticity, wave direction, direction spread, etc. becomes available.

7.4.1 Wave height spectrum

In the DWR4, the internal wave spectrum is calculated as follows. At a sampling rate of fs = 2.56 Hz, every 200 seconds a total number of N=512 heave samples hk are collected

$$hk = h(k\Delta t),\ \ k=0..N-1 \tag{7.5}$$

where $\Delta t=1/fs$ is the sampling time. A fast Fourier-transform (FFT) is applied to obtain a spectrum in the frequency range 0 to $fs/2$ = 1.28 Hz, having a resolution of fs/N = 0.005 Hz. The FFT yields Fourier coefficients according to:

$$H_l = H(f_l) = \sum_{k=0}^{N-1} w_k h_k \exp(2\pi i kl/N) \quad f_l = l/N\Delta t \quad l = 0\ldots N-1 \tag{7.6}$$

with $i = \sqrt{(-1)}$. The w_k indicates the window coefficients. Datawell applies a Hann window

$$w_k = \frac{1}{2}\left(1-\cos\left(\frac{2\pi k}{N}\right)\right) \quad k = 0\ldots N-1 \tag{7.7}$$

For normalization all window coefficients must be divided by

$$w_{norm} = \sqrt{f_s \sum_{k=0}^{N-1} w_k^2} \tag{7.8}$$

The power spectral density is obtained from the Fourier coefficients

$$PSD(f_0) = |H_0|^2 \tag{7.9a}$$

$$PSD(f_l) = |H_l|^2 + |H_{N-l}|^2 \quad l = 1\ldots N/2-1 \tag{7.9b}$$

$$PSD(f_{N/2}) = |H_{N/2}|^2 \tag{7.9c}$$

where frequencies range from 0.0 Hz to 1.28 Hz in steps of 0.005 Hz.

Finally, 17 half-overlapping spectra covering exactly 1800 s are averaged and used to compute the half-hourly wave spectrum. Each half-integral hour (1800 s) a new cycle starts.

7.4.2 Wave direction spectrum

So far only the vertical displacements have been processed to give the wave power spectral density. When north and west displacements are included into the processing, much more wave information can be obtained. Starting from the time-series of north, west and vertical (n, w, v) displacements, the three associated Fourier series may be calculated. Each Fourier series consists of a number of Fourier coefficients, which in turn consist of a real and imaginary part. Thus six Fourier components per frequency f are obtained α_{nf}, β_{nf}, α_{wf}, β_{wf}, α_{vf} and β_{vf} or in vector notation:

$$A_{nf} = \alpha_{nf} + i\beta_{nf} \tag{7.10a}$$

$$A_{wf} = \alpha_{wf} + i\beta_{wf} \tag{7.10b}$$

$$A_{vf} = \alpha_{vf} + i\beta_{vf} \tag{7.10c}$$

Building on this, co- (C) and quadrature-spectra or quad-spectra (Q) may be formed, e.g. (we shall omit the frequency subscript hereafter)

$$C_{nw} = \overline{A_{nf}} \cdot \overline{A_{wf}} = \alpha_{nf}\ \alpha_{wf} + \beta_{nf}\ \beta_{wf} \tag{7.11}$$

$$Q_{vn} = \overline{A_{vf}} \times \overline{A_{nf}} = \alpha_{vf}\ \beta_{nf} - \beta_{vf}\ \alpha_{nf} \tag{7.12}$$

In total 9 components arranged in a 3x3 matrix will be obtained for both co- and quad-spectra. However, not all components need to be calculated. By definition we have

$$Q_{nn} = Q_{ww} = Q_{vv} = 0 \tag{7.13}$$

Furthermore, Q represents rotation. To give an example, a wave rolling eastward will have a rotation component directed to the north (right-handed screw) and hence $Q_{vw} \neq 0$ and $Q_{wv} \neq 0$. The rotation in the waves is particularly clear for breaking waves in the surf zone. A rotation component directed vertically would represent eddy currents which are not part of the physics of waves, therefore we also have

$$Q_{wn} = Q_{nw} = 0 \tag{7.14}$$

Thus, one obtains:

$$\begin{pmatrix} C_{ww} & C_{wn} & C_{wv} \\ C_{nw} & C_{nn} & C_{nv} \\ C_{vw} & C_{vn} & C_{vv} \end{pmatrix} \tag{7.15}$$

and

$$\begin{pmatrix} 0 & 0 & Q_{wv} \\ 0 & 0 & Q_{nv} \\ Q_{vw} & Q_{vn} & 0 \end{pmatrix} \tag{7.16}$$

Given these components a whole set of informative wave parameters such as: wave direction, direction spread, wave ellipticity can be obtained. Before discussing their meaning in more detail, first, all formulas will be given.

$$a_1 = \frac{Q_{nv}}{\sqrt{(C_{nn} + C_{ww})C_{vv}}} \tag{7.17}$$

$$b_1 = \frac{-Q_{wv}}{\sqrt{(C_{nn} + C_{ww})C_{vv}}} \tag{7.18}$$

$$a_2 = \frac{C_{nn} - C_{ww}}{C_{nn} + C_{ww}} \tag{7.19}$$

$$b_2 = \frac{-2\,C_{nw}}{C_{nn} + C_{ww}} \tag{7.20}$$

These are the first four Fourier coefficients of the normalized directional distribution $G(\theta, f)$

$$G(\theta, f) = \frac{1}{\pi}\left\{\frac{1}{2} + a_1 \cos\theta + b_1 \sin\theta + a_2 \cos 2\theta + b_2 \sin 2\theta + \ldots\right\} \tag{7.21}$$

alternatively cast as

$$G(\theta, f) = \frac{1}{\pi}\left\{\frac{1}{2} + m_1 \cos(\theta - \theta_0) + m_2 \cos 2(\theta - \theta_0) + n_2 \sin 2(\theta - \theta_0) + \ldots\right\} \tag{7.21}$$

where

$$\theta_0 = \arctan(b_1, a_1) \tag{7.22}$$

$$m_1 = \sqrt{a_1^2 + b_1^2} \tag{7.23}$$

$$m_2 = a_2 \cos 2\theta_0 + b_2 \sin 2\theta_0 \tag{7.24}$$

$$n_2 = -a_2 \sin 2\theta_0 + b_2 \cos 2\theta_0 \tag{7.25}$$

The *m*- and *n*- coefficients are known as the centred Fourier coefficients [Kuik88] or the second harmonic of the directional energy distribution recalculated to the mean wave direction.

Wave direction

$$D = \theta_0 = \arctan(-Q_{wv}, Q_{nv}) \tag{7.26}$$

Directional spread

$$S = \sqrt{2 - 2m_1} \tag{7.27}$$

Wave ellipticity or 1/*K* where *K* is the check factor

$$\varepsilon = 1/K = \sqrt{\frac{C_{vv}}{C_{nn} + C_{ww}}} \tag{7.28}$$

Power Spectral Density

$$PSD = C_{vv} \tag{7.29}$$

In the present context parameters a_i and b_i are just helpful intermediate variables. In terms of this more intricate Fourier analysis we again arrive at the power spectral density. Its value and meaning already have been mentioned.

Wave ellipticity indicates the shape of the wave. For wavelengths much smaller than the depth, waves describe circular orbits and the ellipticity is near 1. However, if the wavelength becomes comparable to or larger than the depth, the vertical displacements are smaller than the horizontal ones and the ellipticity is smaller than 1. The variation of the ellipticity with wave frequency is indicative of the local depth. Historically, Datawell refers to its reciprocal as check factor. When testing the buoy in a Ferris wheel the 'wave ellipticity' should yield 1 of course. In the case of stabilized platform accelerometer-based motion sensors, however, the ellipticity is seen to deviate by a small factor at the lower frequencies. This serves as a check on platform stability and the parameter, the reciprocal of the wave ellipticity is named accordingly.

Wave direction and spread speak for themselves. By a close look at the simultaneous north and west motion the wave direction can be determined. For clarity the Datawell wave direction is the direction *from* which the waves arrive. Both are expressed in radians.

In this analysis we have followed the analysis in [Long63].

7.4.3 Filtering

The final goal is to measure the waves. Now there are two limitations that will keep the buoy from accurately measuring the waves. At higher frequencies, the wave wavelength becomes comparable to the buoy dimensions and the buoy will not be able to follow the particular waves anymore (geometric attenuation). As higher frequency measurements can only introduce noise, all analog outputs of the DWR4 sensors are filtered by applying a low-pass filter with a cut off frequency of 1.5 Hz. The filtered sensor outputs are then sampled and transformed to north, west and vertical accelerations all at a rate of 5.12 Hz

Another limitation comes from the sensors themselves. At the low frequency end accelerations become very small and disappear in the sensor noise. Therefore, for the DWR4, a digital high-pass filter with a cut off at 30 s is applied to the 5.12 Hz samples. At the same time it converts the sample rate to 2.56 Hz. Finally, these accelerations are doubly integrated to give the three-dimensional buoy motion in the frequency range of 0.033-1 Hz.

7.5 Mooring influence

7.5.1 Wave height

Waves at sea are the result of orbital motions of the water particles, characterized by their frequency f, amplitude A and direction. The water forces at the hull of the buoy cause a mass equal to the displaced water volume to follow the orbital motion. Since the mass of the buoy m equals the mass of the displaced water volume, the buoy will follow the orbital motion as well. Measuring the vertical motion of the buoy yields the wave height.

The high frequency response of the wave buoy is limited by the dimensions of the buoy. For wavelengths smaller than the buoy's circumference, the wave motion is not followed anymore by the buoy. On the other side, the horizontal low frequency response is determined by the combination of the buoy and the mooring forces. The mooring forces hinder the following of the waves. The extra mooring force on the buoy in an orbit of amplitude A is

$$F_{moor} = CA \tag{7.1}$$

where C is the spring constant of the rubber cord in the horizontal direction. Introducing the mass spring resonance frequency

$$f_0 = \frac{1}{2\pi}\sqrt{\frac{C}{m}} \tag{7.2}$$

(m including the added mass of the buoy) and the wave forces being

$$F_{wave} = m(2\pi f)^2 A \tag{7.3}$$

we find the ratio of the forces to be

$$\frac{F_{moor}}{F_{wave}} = \frac{CA}{m(2\pi f)^2 A} = \left(\frac{f_0}{f}\right)^2 \tag{7.4}$$

For wave frequencies higher than f_0, the buoy rides the waves perfectly, whereas for wave frequencies lower than f_0 the horizontal motion is hindered by the mooring forces. In case the buoy does not follow the horizontal motion of the wave, the orbital energy will be spread over different frequencies [Rad93].

7.5.2 Wave direction

Measuring the direction of the waves by means of an orbital following buoy (like the DWR4) requires the buoy to precisely follow the two dimensional horizontal part of the orbital motions. Mooring forces cause the dynamic response tangent to the mooring line to differ from the dynamic response normal to the mooring line. As a result, the direction of motion of the buoy will deviate from the direction of motion of the water particles. To meet the directional specifications a large resilience of the mooring line is required.

For further information on measuring waves Datawell suggests [Tuck01].

7.6 Specifications

Table 7.1 contains the specifications of the wave measurements.

Table 7.1. Specifications of the wave measurements.

Parameter	Value
Heave	
Range	−20-+20 m
Resolution	variable, 1 mm smallest step
Scale accuracy (gain error)	< 0.5 % of measured value after calibration < 1.0 % of measured value after 3 year
Zero offset	< 1 cm
Period time	1.0 s-30 s
Direction	
Range	0º-360º
Resolution	0.1º
Reference	magnetic north
Buoy heading error	0.4º-2º depending on latitude, typical 0.5º
Period time in free floating condition	1.0 s-30 s
Period time in moored condition	1.0 s-20 s
Filter	
Sampling frequency	5.12 Hz
Digital filtering type	phase-linear digital FIR filter
Measurement to HF data output delay (includes all filter and buffer delays)	130 s +/− 10 s
Data output rate	2.56 Hz
Bandwidth	0.037-0.997 Hz (-3dB)
Passband flatness	better than 0.005dB
Stopband suppression	better than 70dB
Extreme temperatures	
Operating (in water)	−5 ºC-+35 ºC (water temperature)
Long term storage (indefinite)	−5 ºC-+40 ºC
Short term storage (days) min	See **section 6.1**
Short term storage (days) max	55 ºC max

8 Acoustic Current Meter (ACM)

The Directional Waverider is extended with an optional surface current meter. This Acoustic Current Meter, or ACM for short, combines a robust measuring principle, Doppler shift, with a mechanical design that avoids vulnerability. This results in a coherent oceanographic instrument that meets the challenges at sea.

Note: Please refer to *section 19.10.7* for the console `setup` options.

8.1 Measuring currents with your DWR4

By integrating 3 acoustic transducers in the hull of the DWR4, the surface water velocity can be measured. The current is determined at roughly one metre water depth, by measuring the Doppler shift of reflected 2 MHz pings. This robust and reliable method accords well with the Hippy 40 wave sensor. Every 10 minutes, the magnitude and direction of the surface current are measured by three acoustic transducers. The transducers all face 30 degrees down and are 120 degrees laterally apart. Each transducer measures the projection of the current velocity along its axis.

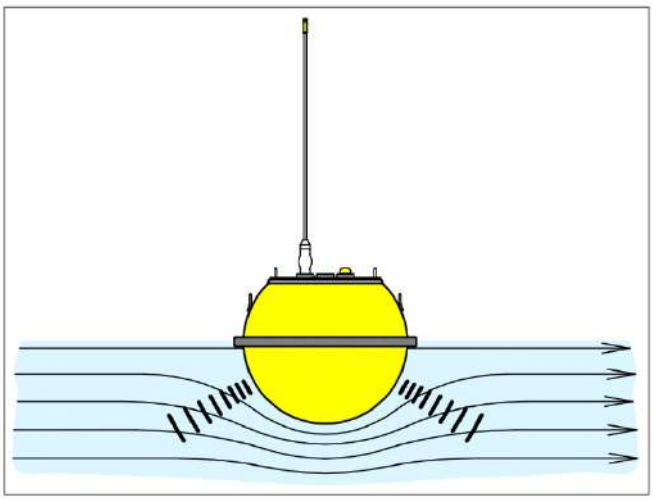

Figure 8.1. Illustration of the current flow affected by the buoy.

By time-gating the sensitive distance for the water velocity measurement is between 0.5 and 1.75 m from the hull. The current flow is affected by the presence of the Directional Waverider, see Figure 8.1. Close to the hull, the radial component of the velocity will be small, as opposed to the azimuth and inclination components. Potential theory predicts thus an underestimation of a few percent. No compensation for this effect is applied. The velocities as measured by the transducers are converted into a north-west-vertical water velocity by means of the pitch-roll sensor and the compass of the DWR4. During one minute each transducer fires 150 acoustic pings. The velocity measurements are quality-controlled and averaged.

8.1.1 Impact of waves on current measurement

Due to the orbital nature of the wave motion, the horizontal velocity is not a constant over time and place. Different ranges of wave periods have a different impact on the water velocity measurement.

Short waves, up to 1 second (1.5 m wavelength) average out in the volume over which the velocity is measured. Due to the size of the DWR4, the wavelength is too short to make the buoy follow the waves and introduce artificial water velocity.

Waves which have a period smaller than 30 seconds (wavelength smaller than 1.5 km) can affect the velocity measured by the individual pings. Being moored flexibly, the Waverider buoy is able to follow the wave motion, which reduces the impact by the horizontal wave velocity significantly.

Wave periods beyond 30 seconds (wavelength longer than 1.5 km) will affect the individual water velocity measurements in the case of a moored buoy.

8.1.2 Impact of tidal motion on current measurement

At the change of tide, the direction of the current typically changes by some 180 degrees and the buoy traverses from one stable position to another one. During the crossing, the actual water velocity is the vector-sum of the current as measured by the buoy plus the velocity of the buoy itself. The velocity of the buoy when moving from one location to the other is typically small, up to a couple of centimetres per second, depending on the location and mooring line length. At some locations however, the buoy velocity can amount to one or more decimetres per second every change of tide. Every acoustic current measurement the GPS position change over 2 minutes is monitored to obtain a calculated buoy velocity. In order to avoid contamination from one velocity measurement to the other, this buoy velocity is kept separate from the current velocity measurement by the acoustic transducers.

8.2 Acoustic transducers and electronics

The three acoustic transducers are connected to the hull control unit. Transducer numbering increases clockwise when viewed from above. Each transducer is labelled with a colour. Transducer 1 is labelled red, transducer 2 is labelled green and transducer 3 is labelled blue. It is important to connect the transducers to the corresponding colours after you removed the transducers for maintenance or replacement. See Figure 8.2 and Figure 8.3.

Figure 8.2 DWR4/ACM 0.9m - ACM electronics inside the hull control unit and coaxial cables of the three acoustic transducers.

Figure 8.3 DWR4/ACM 0.7m - ACM electronics inside the hull control unit and coaxial cables of the three acoustic transducers.

8.3 Measured parameters

The principal parameters measured by the ACM are current speed and current direction. In addition to these parameters, the ACM produces parameters which are used to evaluate the condition of the ACM transducers and hardware. All measured parameters are summarized in Table 8.1.

Table 8.1. Overview of all measured ACM parameters.

Parameter	Description	Unit
Velocity	This is the measured current velocity in the north-west plane.	m/s
Direction to	This is the direction in the north-west plane to where the current is heading. Current is defined as "flowing to" the given direction.	°
Sigma (Velocity)	This is the standard deviation of the measured current velocity. Normal values are between 0.01..0.03 m/s.	m/s
Sigma (Direction to)	This is the standard deviation of the measured current direction. The standard deviation of the direction depends strongly on the current velocity, see Figure 8.4.	°
RSSI (T1,T2,T3)	These are the strengths of the received echoes for transducer T1, T2 and T3. The strength of the echoes are given in a logarithmic scale. Typical values are: above 0dBr = very strong echoes 0dBr…-51dBr = normal echoes below -51dBr = too weak echoes (see text)	dBr
Tw	This is the water temperature that is used to calculate the speed of sound in water. The water temperature is measured at the start of every measurement interval by the sea surface water temperature sensor.	K
'W'	This parameter is the vertical component (speed) of the measured current. This component is a result of the performed calculations and not used to calculate current velocity or direction. This is a "quality factor" (see text).	m/s
Sigma ('W')	This is the standard deviation of the vertical component of the measured current.	m/s

8.3.1 Current velocity and current direction

Current velocity and current direction are the principal parameters measured by the ACM. Current velocity and direction are measured in the horizontal north-west plane. Current velocity and direction are fully compensated for (and thus independent of) buoy tilt angle and buoy orientation.

8.3.2 RSSI

The RSSI (Received Signal Strength Indicator) values of the three transducers T1, T2 and T3 give an indication of the strength of the received echoes. Typically RSSI ranges from 0 to −50 dBr. It varies with the amount and type of scatterers in the water. It also depends on biofouling that attenuates both the transmitted ping and received echo. Biofouling is a gradual process, going from invisible films of microorganisms to soft seaweeds, to hard mussels and barnacles. As a result RSSI commonly shows a downward trend until it reaches the electronics noise floor at about −50 dBr. While the RSSI trend is above −30 dBr measurements are normally correct. When it drops down to the noise floor cleaning is definitely necessary.

Initially biofouling only reduces the RSSI, but ultimately the current measurements themselves will also be compromised. RSSI is provided as one of the parameters to trigger timely cleaning

of the buoy and transducers. However, there is no general rule and other parameters may be considered as well. A low RSSI value alone does not imply erroneous measurement, e.g. in water with few scatterers. Rather, the onset of excessive hard fouling must be detected in the downward trend. For this the divergence of the three RSSI signals may be a useful parameter.

At the start of the deployment, the RSSI signals are all very similar, which is to be expected as far as they are determined by the reflectivity of the water and the condition of the transducers. An explanation for the divergence is that biofouling is a natural process, not likely to take place in an identical fashion on all three transducers. The exact moment in time when a mollusc or mussel occupies a transducer may differ between transducers. In the end the amount of biofouling will be very similar for the three transducers. So the divergence will only signal the onset of biofouling and, even so, not guaranteed. This is a useful trigger, although cleaning need not be done immediately.
The velocity itself is also an important parameter. The measured value may become increasingly lower than the true value as biofouling accumulates. Once this becomes evident, by comparing current with initial timeseries or comparing readings just before and after cleaning, this trigger is long overdue. However, by relating to the RSSI trend, that may be a useful trigger for the next deployment.

8.3.3 'W' parameter

The 'W' parameter contains the vertical component (speed) of the measured water current. This component is an extra result of the calculations performed by the ACM. It is not used to calculate current velocity or direction. Ideally, this component should be zero. However, any imperfections in the stabilized platform sensor, alignment of the transducers or non-uniform current flow around the buoy can cause the 'W' parameter to have a non-zero value. The 'W' parameter can therefore be considered as a quality factor for the ACM hardware.

In practice, 'W' is never zero but will vary a bit with measured current velocity and tidal movements. However, if 'W' becomes too large, there may be a problem with the transducer alignment (caused, for example, by a dented hull), the mooring or the stabilized platform sensor.

8.3.4 Other parameters

In addition to the above parameters, the ACM also measures the standard deviation of the current velocity, current direction and the 'W' parameter. These standard deviations give an indication of the noise levels (or spreads) of the measured parameters.

For the current velocity and the 'W' parameter, the sigma is usually around 0.01...0.03 m/s, depending on sea state and wave height. For the current direction, the sigma is strongly dependent on the measured current velocity. The reason for this is that it's more difficult to calculate the direction for small current velocities. (For example, for 0 m/s current velocity, the direction is not defined hence the standard deviation is very high). Figure 8.4 shows the typical standard deviation of the current direction versus the current velocity.

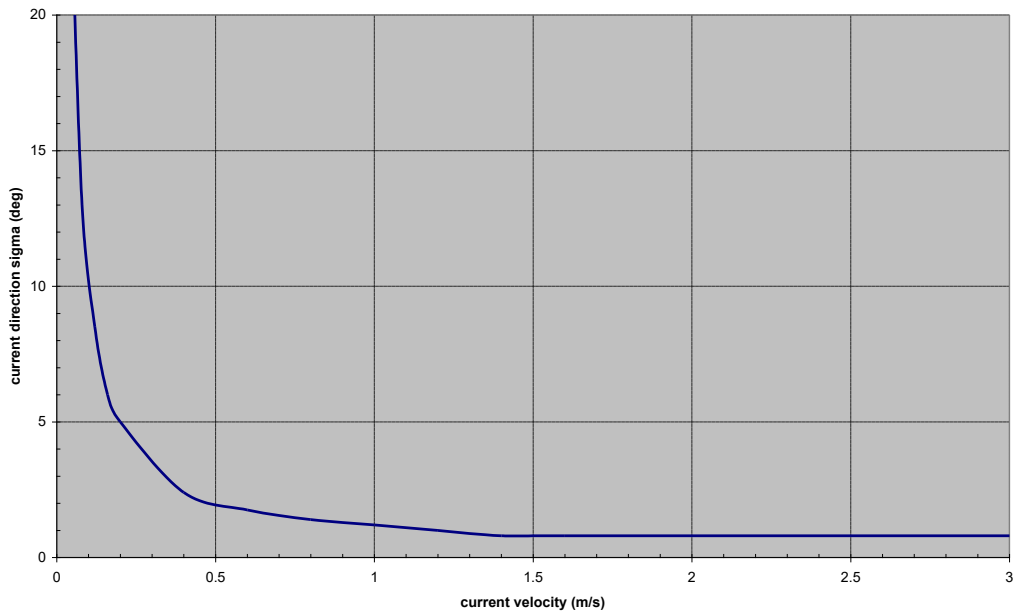

Figure 8.4 Sigma of the current direction versus the current velocity.

8.4 Timing

The ACM is controlled by the internal, GPS synchronized, clock. Every 10 minutes (at exactly 00:00 hours, 00:10 hours, etc), the ACM takes a measurement, transmits the results over the HF link and logs the results to the logger. When the internal clock is not set (due to a bad GPS signal), the ACM will continue to measure in a 10 minute rhythm but the 10 minute intervals will not be synchronized to GPS time.

8.5 Simplified measurement principle

The ACM uses the Doppler principle to measure the velocity and direction of the sea surface water current. The ACM consists of three acoustic transducers mounted in the hull and an electronic control unit. The acoustic transducers transmit and receive acoustic pulses. The control unit generates and processes the acoustic pulses and passes the results to the hatch cover electronics.

The Doppler principle works by transmitting acoustic pulses (pings) into the water. These pings create echoes by reflecting on small particles (scatterers) that flow with the current. These scatterers may be small bubbles, algae, etc. The movement of the scatterers will cause the echoes to have a slightly shifted frequency when compared to the original (transmitted) ping. This is the so-called Doppler shift. By measuring the Doppler shift for each of the three transducers, the ACM is able to calculate current velocity and current direction.

To yield accurate results with low noise, the ACM uses two methods to improve the quality of the measurement:

- First, every single ping is corrected for the instantaneous pitch, roll and heading of the buoy. The instantaneous pitch, roll and heading readings are taken from the stabilized platform and other sensors in real-time.
- Second, the ACM does 165 pings per transducer (this amounts to 495 pings in total) to average out any noise caused by sea waves and by the Doppler method itself. Pings are performed approx. every 0.39 second. Therefore, a complete measurement of 165 measurements takes about 64 seconds.

The final, averaged results are transmitted over the HF link and stored on the logger.

8.6 Corrections for salinity and temperature

To be able to accurately determine the water velocity, the ACM uses the international standard UNESCO equation to calculate the speed of sound in water. The principal variables in this equation are salinity, pressure and temperature. The values used by the ACM are:

salinity = 35 ppt (typical value for sea water)
pressure = 10 kPa (corresponds to a depth of 1 m)
temperature = measured by buoy before every measurement.

The current velocity changes approx. 0.74 % for every 10 ppt change in salinity. As the salinity is fixed, the velocity measurements of the ACM must be corrected if the buoy is deployed in freshwater or, for example, in front of a river mouth. In these cases, the actual salinity can be significantly less and the measured velocity must be corrected using the following approximation:

$$Velocity_S = Velocity_{ACM} \cdot \left(0.974 + S \cdot 740 \cdot 10^{-6}\right)$$

Where:

$Velocity_S$ = Velocity at actual salinity S
$Velocity_{ACM}$ = Velocity as measured by the ACM
S = Actual salinity in ppt (0..40)

This approximation is accurate to about 0.4 % for water temperatures between 0 °C and 40 °C. For a more accurate correction, use the full UNESCO equation.

8.7 Specifications

Table 8.2 lists the specifications of the acoustic current meter.

Table 8.2. Specifications of Acoustic Current Meter.

Parameter	Value	
General	Algorithm:	Doppler
	Sensors:	three 2 MHz acoustic transducers
	Ping power:	17.5 W
	Ping duration:	1 ms
	Cell size:	0.4 m - 1.1 m from sea surface
	Update rate:	every 10 minutes
	Avg. interval:	64 seconds
Current velocity	Range:	0 - 300 cm/s, resolution: 1 mm/s
	Accuracy:	1 % of measured value +/- 2 cm/s
	Std. (1σ):	1 - 3 cm/s
Current direction	Range:	0° - 360°, resolution 0.1°
	Accuracy:	1.4° - 3° (depending on latitude) typical 1.5°
	Std. (1σ):	<5° for velocities >0.2 m/s

9 Sea surface water temperature

A sea surface water temperature sensor is standard on the DWR4 buoy. The temperature sensor is located next to transducer 1 (in case of the ACM option). It is fixed inside an aluminium housing on the inside of the hull, see Figure 9.1. The temperature sensor inside the DWR4 is connected to the electronics of the hull control unit and digitalized. An optimum thermal contact with the metal hull is ensured by metal-to-metal joints and thermally conducting paste. Heat conduction from the interior is minimized by thin wires and foam insulation. The effect of marine growth is small due to the large contact area of the bottom half of the hull. Nevertheless, marine growth around the temperature sensor should be removed for optimal measurements. Specifications are listed in Table 9.1.

Table 9.1. Sea surface water temperature measurement specification.

Parameter	Value
Output range	sufficient
Output resolution	0.01 ºC
Sensor range	−40-125 ºC
Sensor accuracy	0.1 ºC (0-70 ºC)
Measurement accuracy	0.2 ºC
Update rate	every 5 min

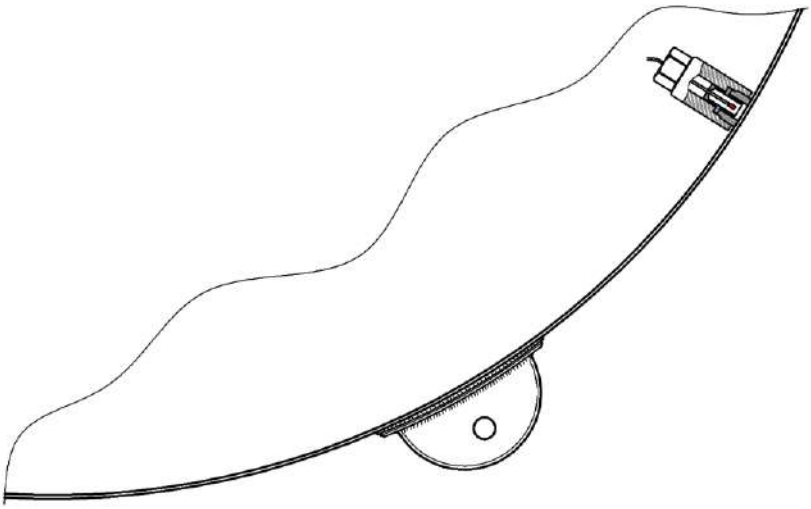

Figure 9.1 Temperature sensor above the mooring eye next to transducer 1(in case of ACM option).

10 Compact Air Temperature

The Compact Air Temperature (CAT4) is a meteorological air temperature sensor integrated in the HF-antenna (chapter 12) of the Directional Waverider. It consists of four individual sensors that have different radiative properties and will therefore measure different temperatures. The actual air temperature is derived from these different temperatures. External influences that might affect the measurements, such as evaporative cooling, are detected for validation.

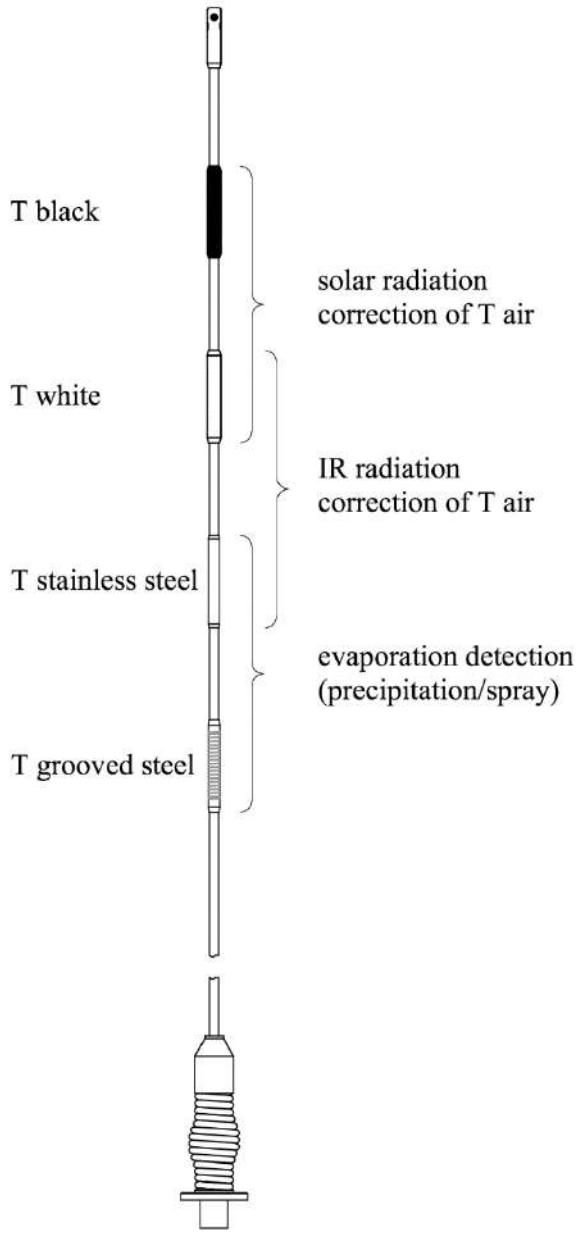

Figure 10.1. Schematic drawing of CAT4 antenna.

10.1 Correction for absorption- and emission of radiation

Absorption of solar radiation by an object will increase its temperature. At equilibrium the absorbed energy equals the lost energy to the passing, colder, air. For small objects and wind velocities as can be expected at sea, the temperature increase is proportional to the radiation intensity and the absorption coefficient of the material. By measuring the temperature of two mechanically equivalent objects with different absorption coefficients for solar radiation, the temperature of a hypothetical sensor protected against solar radiation can be calculated.
When no other disturbing phenomena are present this last temperature is the air temperature. On the Waverider this concept is implemented by incorporating two thermistors in the HF-antenna, one covered with a polymer having a low coefficient of absorption for solar radiation (white), and the other one covered with a polymer having a high coefficient of absorption for solar radiation (black).

Thermal emission from the sensor to the cold sky takes place in the far infrared, nicely distinct from the maximum power peak of the solar radiation. The correction method for this emission is similar to the correction for absorption. Two materials are selected that have different emission coefficients. The materials used for the correction of absorption have high emission coefficients. A distinct material with a low emission coefficient (stainless steel) is added to compensate for the heat loss due to emission.

Dynamics
Since all three sensors are both mechanically and thermally equivalent they have the same thermal dynamics, allowing an energy balance algorithm to calculate the air temperature corrected for absorption and emission on the basis of the three thermistor measurements.

Exposed accuracy
Applying the aforementioned corrections yields calculated temperature data within ±0.5°C accuracy, as long as the data are validated. When a solar-induced uncertainty is detected temperature data will be within ±1°C accuracy. When evaporation is detected measurement accuracy cannot be guaranteed.

10.2 Detection of solar-induced uncertainty and evaporation

If the weather conditions are windless and sunny the correction method is no longer sufficient to guarantee accurate measurements. However, thanks to the applied principle the CAT4 sensor is able to detect these weather conditions by monitoring the temperature difference between the aforementioned black and white sensors. When a solar-induced uncertainty is detected the measurement accuracy decreases from ±0.5°C to ±1°C.

Like radiation, precipitation and spray can disturb the temperature measurement. Depending on relative humidity and wind condition, evaporation can affect the temperature reading. During evaporation the air temperature data accuracy cannot be guaranteed. Correcting for this disturbance is not realistic. However, the period in which the sensors are cooled down by evaporation can be detected. Cooling down of the sensors by evaporation is detected by enhancing the evaporation and increasing the volume of adsorbed water. This is implemented by covering one extra thermistor in the HF-antenna with an enlarged surface with water-containing ability (a grooved stainless steel surface). Because both sensors are covered with stainless steel, they have similar radiative properties. Therefore, when the temperature of the groove-covered

sensor is substantially lower than the temperature of the sensor covered with smooth stainless steel, water is evaporating and the data are not valid. When the temperature of the grooved steel sensor returns to, or exceeds the temperature of the smooth steel sensor, evaporation will have stopped and the data will be valid.

10.3 Specifications

Table 10.1 Specifications

Air temperature sensor	Range	–20°C - +70°C
	Resolution	0.1°C
	Thermistor accuracy	±0.1°C
	Exposed accuracy	±0.5°C Solar-induced uncertainty flag: ±1°C
	Measurement interval	5 min.
	Measuring height	2m above sea surface
	Life expectancy	Designed to last 10 years
	Maintenance Interval	Recommended yearly

11 GPS position

With GPS (Global Positioning System) and HF communication the position of a drifting buoy, be it on purpose or accidentally, can be tracked. GPS position is standard on the DWR4 buoy. Latitude and longitude are updated every 10 minutes and transmitted together with a timestamp of that position. The position accuracy is about 5 m. Position integrity is monitored by the GPS receiver. Only if the receiver flags the position as valid, will the position be updated and transmitted. Otherwise the last available GPS position with the corresponding timestamp will be transmitted.

GPS is also used to set the internal clock to UTC and keep it synchronized. Measurement samples and data messages are synchronized as well. Should GPS time fail all measurements and messages continue, however, with reference to the unsynchronized internal clock.

11.1 GPS position antenna

Figure 11.1 shows the GPS antenna which is used for GPS positioning on the DWR4. Since it is very compact the antenna is already mounted. If you need to remove it, make sure to put back the rubber sealing ring in a clean groove when reinserting the GPS position antenna.

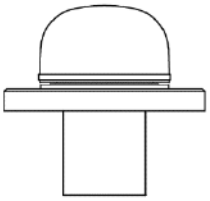

Figure 11.1 GPS position antenna for the DWR4.

11.2 GPS position specifications

Table 11.1 lists the specifications for GPS positioning.

Table 11.1. Specifications of GPS positioning.

Parameter	Value
Position accuracy	5 m
Update rate	every 10 minutes

12 HF communication

The standard way of communicating the data from the buoy to shore is by the HF radio link. For reception a Datawell RX-C or Buoy Finder 4A receiver is required. Each buoy transmits at its own frequency, thus allowing several buoys in the same area at sea. A large set of frequencies in the range of 25.5 - 35.5 MHz is available. Frequencies in the range of 35.5 - 45 MHz are available on request. The transmitting range extends to beyond line-of-sight and amounts to some 50 Km. Data is transmitted continuously by Frequency Shift Keying (4FSK) at a bit rate of 163.84 baud. Please refer to the Datawell Waverider Transmission Protocol manual for the data structure. The LED flasher is integrated in the HF antenna. For details refer to the *section 23* on the LED flasher.

Note: Please refer to *section 19.10.5* for the console `setup` options.

12.1 Transmitter frequencies

Within the range of 25.5 - 35.5 MHz (35.5 - 45 MHz on request) the user may freely choose the preferred transmitter frequency. Given a certain frequency, the transmitter is fine-tuned by Datawell at the factory for optimum performance. The transmitter module is labelled as 4FSK. Should you wish to change the frequency, please contact Datawell Sales.

The CAT4 antenna has different characteristics compared to the HF/whip antenna. Therefore, both the antennas and transmitter modules are not interchangeable! CAT4 compatible transmitter modules are marked with a "CAT4" sticker.

12.2 HF antenna

The majority of buoys are equipped with data transmission through HF radio link. The HF whip antenna incorporates a LED flasher to mark out the buoy's presence and location. The antenna is mounted on a spring. See Figure 12.1. To avoid breaking of the antenna, the rigid spring will subdue in a collision. However, it will not bend under wind force in order to maintain the data link (polarization).

This HF/LED antenna must be inserted in the HF-port on the hatchcover. Please make sure that the rubber sealing ring is in place and that insert and port are clean and dry before doing so. Fasten the six hexagon socket screw-bolts.

Obviously for checking the HF output power the whip antenna must be in place. To merely receive the HF data signal on your buoy receiver in close proximity of the buoy, for example while servicing or testing the buoy in your laboratory, the whip antenna may be removed for convenience. A short piece of wire in the centre pin of the connector may be used instead.

12.3 Specifications

The most important transmitter and antenna specifications are summarized in Table 12.1 and Table 12.2.

Table 12.1. Transmitter specifications.

Parameter	Value
Radiated output power	100 mW max
Frequency range	25.5 -35.5 MHz (35.5 - 45 MHz on request)
Frequency deviation	±80 Hz
Transmit range	50 Km (over sea water)
Link bitrate	163.84 baud
Modulation	4FSK
Classification of emission	377H F1DDN

Table 12.2 HF antenna specifications.

Type of antenna	¼ λ vertical monopole
Height of antenna	Sea level
Azimuth of maximum radiation	5…10°
Angular width of radiation	360°
Antenna gain	0 dB (dipole)

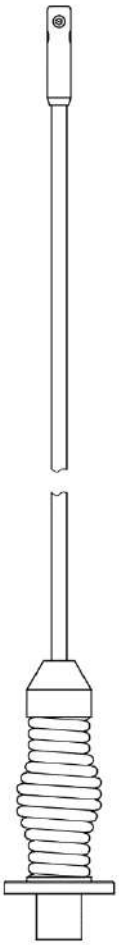

Figure 12.1 HF whip antenna insert with LED flasher.

13 GSM-internet communication

The GSM-internet communication link is optional on Datawell wave buoys for near shore applications. All DMF messages (refer to section *15.1.6 Internet messages*) are supported by the GSM-internet option. This section will describe how to install and operate the buoy side of the GSM-internet communication link.

Note: Please refer to *section 19.10.1* for the console `setup` options.

13.1 Choosing a GSM network provider

The coverage of the GSM network is provider dependent. The coverage can be checked with the provider or at: https://www.gsma.com/coverage/

13.2 Preparing the SIM-card

In order for the GSM-option to function, the SIM-card used has to be in unprotected mode: a mode where the SIM-card does not require a PIN- or PUK-code.

Open the electronics unit of the hatchcover to gain access to the SIM card holder for the GSM-internet communication.

13.3 GSM antenna

To avoid damage to the GSM module, the GSM antenna must be mounted before use.

Figure 13.1 GSM antenna.

13.4 Internet communication

The Datawell internet communication mode allows any Iridium-internet (or GSM-internet) equipped buoy to transmit data over the internet directly to a computer. The Datawell internet communication mode makes use of the fact that an Iridium satellite modem or GSM modem can be used to "connect" to the internet. To be able to do this, the buoy's firmware talks all the necessary internet protocols like PPP and TCP/IP. Once connected to the internet, the buoy can send its data directly to a computer running the *Waves5 software*.
This works as follows; each time the buoy wants to transmit new data, the buoy will set up an internet connection through an internet service provider (ISP). Once connected to the internet, the buoy will connect directly to the *Waves5 software*. Now that the buoy and the software are connected through the internet, messages will be requested. Each message can be set to its own interval and offset from midnight. For the complete list of messages, please refer to section 15.1.6. To save power and costs, the communication is only set up by the buoy at programmable communication intervals. The communication interval is programmable and will be explained in the following chapters.

For a successful communication, the buoy must be correctly configured:

- The buoy needs information that tells what internet service provider to use (telephone number, password etc.) and where to find the *Waves5 software* (internet address of the computer where the software is running).
  Please refer to the Waves5 user manual for instructions on how to configure the software.

13.5 Specifications

Table 13.1 summarizes the most important GSM specifications.

Table 13.1. GSM modem and GSM option specifications.

	Parameter	Specification
GSM modem	Networktechnology	4G (LTE Cat 1) with 2G and 3G fallback
	SIM card	mini-SIM card
GSM option	Power consumption 30 min interval	30 mW
	Supported format	Datawell message format

14 Iridium-SBD satellite communication

14.1 Iridium satellite system

Iridium is a satellite based cellular phone network. It is built upon a constellation of 66 low earth orbit (LEO) satellites. The constellation is organized in such a way that every part of the globe is covered 24 hrs a day. Iridium gets its name from the element Iridium (Ir), which has an atomic number of 77. This name was chosen because the constellation would initially be built upon 77 satellites. The Iridium option consists of an Iridium satellite modem that fits in the electronics unit and an Iridium antenna.

Note: Please refer to *section 19.10.2* for the console `setup` options.

14.1.1 Antenna

The Iridium option uses a special antenna. The antenna is similar in design to the GPS position antenna but it has a different colour. Whereas the GPS antenna is yellow, the Iridium antenna is black. The Iridium antenna is mounted in the option port labelled Iridium. When mounting the antenna, always check if the rubber sealing ring is present and if the sealing ring contact surfaces are clean. When testing the buoy on shore, make sure the antenna has a clear and unobstructed view of the sky and avoid tall buildings and trees in the direct vicinity of the buoy. As the Iridium satellites are in a low earth orbit (LEO) they are often seen by the buoy at relatively small angles. Therefore, it is important that the buoy has a broad view of the sky hence avoid tall buildings and trees.

14.1.2 Satellite modem

The Datawell Iridium SBD option uses a 9602N Iridium L-band transceiver. This modem is built into the electronics unit. To power the modem, a dedicated power supply is also integrated into the electronics unit on the same printed circuit board as the modem.
This Iridium modem is dedicated to the Iridium SBD service. This SBD modem does not require a SIM-card. The Iridium SBD service will only use the IMEI number of the modem.

14.2 Iridium SBD service and email

Iridium offers a number of services, one of which is Iridium Short Burst Data (SBD). Iridium SBD communicates data via short messages, much the same as GSM text messages (SMS). Messages originating from the Iridium SBD modem are limited to 340 bytes and messages terminating at the modem are limited to 270 bytes. The user interface consists of an arbitrary email program. To get acquainted with the Iridium SBD message format, the example of the incoming email is illustrative, see Figure 14.1. Most of the fields are fixed and self-explanatory, but some require more explanation.

IMEI-number
A Directional Waverider buoy with Iridium SBD cannot be identified by the fixed 'from'-email-address. However, every Iridium SBD modem has a unique hard-coded number: the IMEI number, *I*nternational *M*obile *E*quipment *I*dentification number. Also every cell-phone carries such an IMEI-number. The SBD modem IMEI-number is listed in the subject-field.
There are several ways to obtain the IMEI number. The number is printed on the PCB of the Iridium modem installed in the hatch. Alternatively, the IMEI number will be output by the buoy after start-up. Connect a laptop/PC to the console of the hatchcover to obtain the IMEI number. Or you can contact our sales department (sales@datawell.nl).
´To´-email-address

Best is to use a dedicated email account for the Iridium SBD messages. If the SBD messages are sent to a personal email account, the SBD messages would mix with your personal messages. Although the Waves5 software will not interfere with your personal messages, Outlook (or any other email program) will remove all messages from the inbox of the email server. This makes it impossible for the Waves5 software to receive any SBD related messages.

Message numbers
The Iridium SBD service logs two message numbers MOMSN and MTMSN, where
MO: mobile originated (data from buoy to user)
MT: mobile terminated (command from user to buoy)
Both numbers roll over at 2^{16} = 65536, i.e. after 3.7 years at ½ hour message intervals.

The attachment filename is made up of the IMEI- and MOMSN-numbers. Messages are time-tagged and buoys are identified by the Iridium SBD modem's IMEI-number. Furthermore, each message contains a global position estimate. CEP, short for Circular Error Probability, is expressed in km. Position accuracy is typically a few km's. This is the position based on a Doppler and time delay measurement by the Iridium system, not on the buoy's GPS measurement.

```
From:       sbdservice@sbd.iridium.com
To:         sbd@datawell.nl
Subject:    SBD Msg From Unit: 012345678901234
Attachment: 012345678901234_12345.sbd

Text:       MOMSN: 12345
            MTMSN: 0
            Time of Session (UTC): Tue Jan 01 00:00:00 2013 Session
            Status: 00 - Transfer OK MEssage size (bytes): 123

            Unit Location: Lat = 52.355168 Long = 4.583283 CEPradius = 3

Attachment file:
            ...
```

Figure 14.1 Iridium SBD email example.

14.2.1 SBD messages

Like the HF communication and the data logger, Iridium SBD messages follow the Datawell Message Format (DMF). Please refer to the Datawell Waverider Transmission Protocol (DWTP) specification for an overview of defined messages and exact message formats. Table 14.1 lists the messages that are available for Iridium SBD.

The message transmission interval can be set independently for each message. Configurable intervals are shown in Table 14.2. Each message can have its own offset from midnight UTC to provide more flexibility on the exact hours the messages are received. Table 14.3 lists the possible offsets.

To configure the messages and intervals for Iridium SBD a configuration message must be sent by email to the buoys SBD modem. The Waves5 software offers a configurator to do so conveniently. Customers who use their own software should consult the DWTP specification to compose a configuration email message for Iridium SBD.
In case no message at all is configured, Iridium SBD will still call in once every day at midnight UTC to check for new message configurations.
WARNING: A maximum of 340 bytes can be transmitted in one email. If you request more data at once, the information will be transmitted in multiple emails. This has the potential risk of losing an email and thus data.

Table 14.1 List of DMF messages available for Iridium SBD.

MsgID	Description	Size (bytes)
0xF20	Heave spectrum message	161
0xF21	Primary directional spectrum message	309
0xF23	Spectrum synchronisation message	22
0xF24	Spectral parameters message	24
0xF25	Directional spectral parameters message	27
0xF26	Online upcross wave statistics message	25
0xF28	Secondary directional spectrum message	459
0xF29	Upcross wave height quantiles	59
0xF80	GPS position message	14
0xF81	Sea surface temperature message	10
0xF82	Acoustic current meter message	29
0xF83	CAT4 air temperature message	19
0xFB0	DWR4/ACM summary message	30
0xFC1	System message for the DWR4	67
0xFC3	Battery life expectancy	9
0xFC4	CAT4 version information message	15

Table 14.2 Configurable message intervals.

Message interval (hour:min)	Frequency (messages per day)
-	once
24:00	1
12:00	2
8:00	3
6:00	4
4:00	6
3:00	8
2:00	12
1:30	16
1:00	24
0:30	48
never	0

Table 14.3 Configurable offsets.

Message offsets (hour:min)
-
23:30
23:00
22:30
22:00
:
:
1:00
0:30
None

14.2.2 Waves5 software

The *Waves5 software* supports the storage, processing and presentation of received Iridium SBD emails, as well as composing configuration emails. It can deal with a network of Waverider buoys equipped with Iridium SBD. Furthermore, the PC does not have to be permanently on-line or permanently powered since emails will be buffered by the internet provider. As explained earlier, it is preferred to use a dedicated email account. A single account suffices for a network of Iridium SBD buoys. Please refer to the Waves5 user manual for more information.

14.2.3 First time setup

The buoy settings can only be configured by sending an email to the Iridium SBD modem, e.g. with the *Waves5 software*. It is not possible to configure the buoy using the console. Therefore it is advisable to send a configuration message prior to powering up the buoy.
After powering up the buoy it will connect to the Iridium satellites and check the inbox for configuration messages. If you have already sent a configuration message, the new configuration will take effect immediately. The settings are stored in EEPROM so power-down or reset will not affect the interval settings. It is not possible to contact the buoy outside the programmed intervals. If no messages are requested, the buoy will still call in once per day, midnight UTC, to allow the user to change the settings.

Without a GPS position and time fix, e.g. when testing in-doors, the Iridium SBD transmission will be referred to the internal buoy time instead of UTC.
As a consequence the timing of inbox checks and SBD messages will not occur on the expected UTC times. Be aware of the fact that during the in-door testing of the buoy the system will have no clear view of the sky and therefore cannot communicate with the SBD satellites. This will not only prevent SBD communication it may also increase the buoys energy consumption, depending on the chosen transmission interval.

14.2.4 Specifications

Table 14.4 summarizes the Iridium SBD specifications. The number of DMF messages per SBD email, i.e. the number of bytes has negligible effect on the energy consumption. Energy consumption will be proportionally lower for longer update intervals.
Iridium SBD is charged per byte, so more or longer messages and more frequent messages will result in higher costs.

Table 14.4. Iridium SBD specifications.

Parameter	Value
message length	340 bytes (multiple messages possible)
coverage	global
latency	< 20 s
energy consumption	50 mW (48 updates / day)
transmitter power	7 W max.
frequency band	1616 – 1626.5 MHz

15 Iridium-internet satellite communication

15.1 Iridium-satellite system

Iridium is a satellite based cellular phone network. It is built upon a constellation of 66 low earth orbit (LEO) satellites. The constellation is organized in such a way that every part of the globe is covered 24 hrs a day. Iridium gets its name from the element Iridium (Ir), which has an atomic number of 77. This name was chosen because the constellation would initially be built upon 77 satellites. The Datawell Iridium option makes it possible to send spectral data and raw displacement data directly over the internet to a computer running Waves5. The Iridium option consists of an Iridium satellite modem that fits in the electronics unit and an Iridium antenna.

Note: Please refer to *section 19.10.3* for the console `setup` options.

15.1.1 Antenna

The Iridium option uses a special antenna. The antenna is similar in design to the GPS position antenna but it has a different colour. Whereas the GPS antenna is yellow, the Iridium antenna is black. The Iridium antenna is mounted in the unlabelled option port. When mounting the antenna, always check if the rubber sealing ring is present and if the sealing ring contact surfaces are clean. When testing the buoy on shore, make sure the antenna has a clear and unobstructed view of the sky and avoid tall buildings and trees in the direct vicinity of the buoy. As the Iridium satellites are in a low earth orbit (LEO) they are often seen by the buoy at relatively small angles. Therefore, it is important that the buoy has a broad view of the sky hence avoid tall buildings and trees.

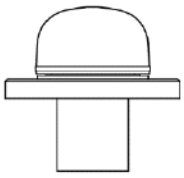

Figure 15.1 Iridium antenna for the DWR4.

15.1.2 Satellite modem

The Datawell Iridium-internet option uses a 9523 Iridium L-band transceiver. This modem is built into the electronics unit. To power the modem, a dedicated power supply is also integrated into the electronics unit on the same printed circuit board as the modem. The antenna connector and the SIM-card bracket of the modem are accessible after removing the lid from the electronics unit.

15.1.3 SIM-card

Since the modem uses the Iridium network, an Iridium subscription is necessary. To identify the Iridium subscriber on the network, a SIM-card is used (supplied by your local provider).
The Iridium modem is located on the Iridium printed circuit board inside the electronics unit. Make sure the electronics unit is switched off. The SIM card can easily be installed in the SIM card holder. Please refer to figure 15.2 The SIM card holder uses a push-push system to insert and remove the SIM card. With an extra lock mechanism you are sure the SIM card is well installed during operation.

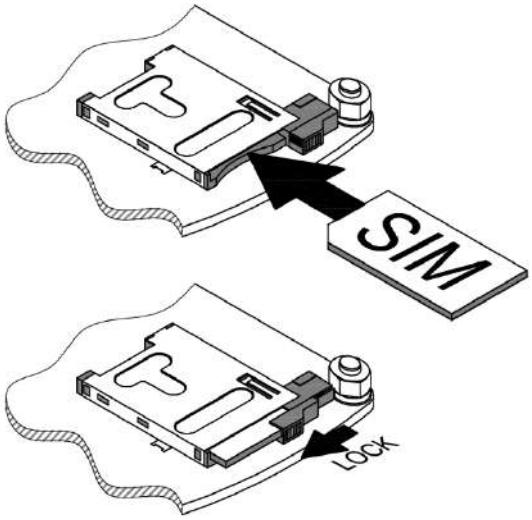

Figure 15.2 Schematic overview of SIM-card installation.

15.1.4 PIN-code

In order for the Iridium option to function, the SIM-card has to be in unprotected mode: a mode where the SIM-card does not require a PIN- or PUK-code. Please indicate this to the Iridium provider when ordering a SIM-card. The provider should be able to deliver an unprotected SIM-card. If the SIM-card is not in unprotected mode, the PIN-code has to be removed. Please contact your Internet Service Provider.

15.1.5 Internet communication

The Datawell internet communication mode allows any Iridium-internet (or GSM-internet) equipped buoy to transmit data over the internet directly to a computer. The Datawell internet communication mode makes use of the fact that an Iridium satellite modem or GSM modem can be used to "connect" to the internet. To be able to do this, the buoy's firmware talks all the necessary internet protocols like PPP and TCP/IP. Once connected to the internet, the buoy can send its data directly to a computer running the *Waves5 software*.
This works as follows; each time the buoy wants to transmit new data, the buoy will set up an internet connection through an internet service provider (ISP). Once connected to the internet, the buoy will connect directly to the *Waves5 software*. Now that the buoy and the software are connected through the internet, messages will be requested. Each message can be set to its own interval and offset from midnight. For the complete list of messages, please refer to section 15.1.6. To save power and costs, the communication is only set up by the buoy at programmable communication intervals. The communication interval is programmable and will be explained in the following chapters.

For a successful communication, the buoy must be correctly configured:

- The buoy needs information that tells what internet service provider to use (telephone number, password etc.) and where to find the *Waves5 software* (internet address of the computer where the software is running).
  Please refer to the Waves5 user manual for instructions on how to configure the software.

15.1.6 Internet messages

Like the HF communication and the data logger, Iridium-internet and GSM-internet messages follow the Datawell Message Format (DMF). Please refer to the Datawell Waverider Transmission Protocol (DWTP) specifications for an overview of defined messages and exact message formats. Table 15.1 lists the messages that are available for Iridium-internet and GSM-internet.

The message transmission interval can be set independently for each message. Configurable intervals are shown in Table 15.2. Each message can have its own offset from midnight UTC to provide more flexibility on the exact hours the messages are received. Table 15.3 lists the possible offsets.

Please note that the interval for the DMF messages is independent of the interval at which the buoy connects to your server. You can, for example, connect to your server once every hour, but configure the interval for the GPS position message to 30 minutes. You would then receive 2 GPS positions (with different timestamps) every hour in the same session.

Table 15.1 List of DMF messages available for Iridium-internet and GSM-internet.

MsgID	**Description**	**Size (bytes)**
0xF20	Heave spectrum message	161
0xF21	Primary directional spectrum message	309
0xF23	Spectrum synchronisation message	22
0xF24	Spectral parameters message	24
0xF25	Directional spectral parameters message	27
0xF26	Online upcross wave statistics message	25
0xF28	Secondary directional spectrum message	459
0xF29	Upcross wave height quantiles	59
0xF80	GPS position message	14
0xF81	Sea surface temperature message	10
0xF82	Acoustic current meter message	29
0xF83	CAT4 air temperature message	19
0xFB0	DWR4/ACM summary message	30
0xFC1	System message for the DWR4	67
0xFC3	Battery life expectancy	9
0xFC4	CAT4 version information message	15

Table 15.2 Configurable message intervals.

Message interval (hour:min)	Frequency (messages per day)
-	once
24:00	1
12:00	2
8:00	3
6:00	4
4:00	6
3:00	8
2:00	12
1:30	16
1:00	24
0:30	48
never	0

Table 15.3 Configurable offsets.

Message offsets (hour:min)
-
23:30
23:00
22:30
22:00
:
:
1:30
1:00
0:30
None

15.1.7 Specifications

Table 15.4 summarizes some Iridium specifications.

Table 15.4 Iridium specifications.

HF	Frequency band	1616 – 1626.5 MHZ
	Transmit power	7 W max.
Power consumption	Refer to below examples	
Communication	Data format	iBuoy protocol

The power consumption strongly depends on the transmission interval and the amount of data that is requested according Table 15.1. The following examples will give an indication on the average power consumption of the buoy.

Table 15.5 Connection specifications.

	Connection setup	**Data transmission**
Time	65 sec	100 bytes/sec
Energy	75 J (65 sec)	2.2 J/sec

Example 1

Transmission interval: 30 minutes
Data update rate: 30 minutes
Requested messages: 0xF25, 0xF80, 0xF81 and 0xF82

Total amount of bytes: (27+25+14+10+29) x (30/30) = 105 x 1 = **105 bytes**
Used energy: 2.2 J x (105/100) = 2.838 J
Total energy: 75 J + 2.838 J = 77.838 J
Average consumption: 77.838 J / 1800 s = **43.2 mW**

Example 2

Transmission interval: 360 minutes (6 hours)
Data update rate: 30 minutes
Requested messages: 0xF25, 0xF80, 0xF81 and 0xF82

Total amount of bytes: (27+25+14+10+29) x (360/30) = 105 x 12 = **1260 bytes**
Used energy: 2.2 J x (1260/100) = 27.72 J
Total energy: 75 J + 27.72 J = 102.72 J
Average consumption: 102.72 J / 21600 s = **4.75 mW**

15.1.8 Waves5 software

The communication with the buoy is handled by the *Waves5 software*, please refer to the Waves5 user manual for more information.
The *Waves5 software* is a very flexible piece of software and allows you to remotely request all available DMF messages as well as data stored on the CF-card.

Furthermore, it is also possible to remotely change the settings of the dial script, destination host and port, transmission interval etc. if necessary.

15.1.9 First time setup

As explained in previous chapter, the buoy can be configured remotely using the Waves5 software. However, the first time setup needs to be performed using the console of the hatchcover. The buoy needs to be configured first before it is able to transmit the message data at specific intervals to the specified hostname/IP address. You will have to do this only once.

After powering up the buoy, it will connect to the Iridium satellites (or GSM network) and try to set-up a connection with the specified hostname/IP address. Once connected, the software will send a message to the buoy containing the requested DMF messages, interval and offset. The settings are stored in the EEPROM so power-down or reset will not affect the interval settings. With the `forcetcp` console command you can initiate a connection outside the programmed intervals. This command is generally used for testing purposes.

Customers completely new to the Iridium-internet or GSM-internet communication on our DWR4/ACM buoy will be asked to provide us the IP address and port number where the software will be installed. Moreover, the customer has to arrange an Iridium-internet or GSM subscription with a local service provider and send the SIM-card to Datawell. Once the customer has successfully installed and configured the software we will test the internet communication prior to shipping the buoy to the customer.

General note:
Without a GPS position and time fix, e.g. when testing in-doors, the Iridium-internet and GSM-internet transmission will be referred to the internal buoy time instead of UTC.
As a consequence the timing of the internet connection will not occur on the expected UTC times. Be aware of the fact that during the in-door testing of the buoy the system will have no clear view of the sky and therefore cannot communicate with the Iridium satellites. This will not only prevent Iridium-internet communication, it may also increase the buoys energy consumption, depending on the chosen transmission interval.

15.1.10 DWR4 iBuoy specifications

For customers who prefer to write their own communication software, Datawell offers the *DWR4 iBuoy specifications* which explains the complete internet communication protocol. These specifications are available in the *Waves5 user manual*.

15.1.11 Error messages

The buoy can give out a number of error numbers related to internet communication. The error numbers are printed out through the console and logged on the internal data logger. The error numbers are given in the form “TCP: error:<N>”, where <N> is the error number. This section discusses all error numbers and description.

Table 15.6. Error numbers.

Error	Description
	General error messages
1	Timeout iBuoy watchdog
2	Unknown state
3	Error is modem script
4	Error in completing LCP phase
5	Error in completing authentication phase
6	Error in completing IPCP phase
7	Error in DNS lookup (no server or unknown hostname)
8	Error in connecting to iBuoy server
9	Timeout in connection to iBuoy server
	Modem script error messages
10	Compare (‘<’ or ‘>’) in modem script failed
11	Compare (‘=’) in modem script failed
20	Error while reading packet from receive buffer
	PAP error messages
21	Error while writing to transmit buffer
22	Zero length option field
	PAP error message
30	Error authenticating
	IPCP error message
40	Error while reading packet from receive buffer
41	Error while writing to transmit buffer
42	Zero length option field
	Communication error messages
60	Timeout at session watchdog
61	Error while transmitting requested file
62	Error while transmitting directory listing

15.1.12 Copyright

The Datawell internet communication module uses the UIP TCP/IP stack.
Copyright (c) 2001-2006, Adam Dunkels and the Swedish Institute of Computer Science All rights reserved.
Redistribution and use in source and binary forms, with or without modification, are permitted provided that the following conditions are met:

1. Redistributions of source code must retain the above copyright notice, this list of conditions and the following disclaimer.
2. Redistributions in binary form must reproduce the above copyright notice, this list of conditions and the following disclaimer in the documentation and/or other materials provided with the distribution.
3. The name of the author may not be used to endorse or promote products derived from this software without specific prior written permission.

THIS SOFTWARE IS PROVIDED BY THE AUTHOR `AS IS' AND ANY EXPRESS OR IMPLIED WARRANTIES, INCLUDING, BUT NOT LIMITED TO, THE IMPLIED WARRANTIES OF MERCHANTABILITY AND FITNESS FOR A PARTICULAR PURPOSE ARE DISCLAIMED. IN NO EVENT SHALL THE AUTHOR BE LIABLE FOR ANY DIRECT, INDIRECT, INCIDENTAL, SPECIAL, EXEMPLARY, OR CONSEQUENTIAL DAMAGES (INCLUDING, BUT NOT LIMITED TO, PROCUREMENT OF SUBSTITUTE GOODS OR SERVICES; LOSS OF USE, DATA, OR PROFITS; OR BUSINESS
INTERRUPTION) HOWEVER CAUSED AND ON ANY THEORY OF LIABILITY, WHETHER IN CONTRACT, STRICT LIABILITY, OR TORT (INCLUDING NEGLIGENCE OR OTHERWISE) ARISING IN ANY WAY OUT OF THE USE OF THIS SOFTWARE, EVEN IF ADVISED OF THE POSSIBILITY OF SUCH DAMAGE.

16 Argos satellite communication

Argos is a satellite communication system operated by CLS (Collecte Localisation Satellites, www.cls.fr). It consists of 8 low-orbit satellites in a polar orbit at 850 Km altitude and with a period of revolution of 100 minutes. Coverage is global, but polar positions are visited more frequent than positions on the equator. Note that satellites pass over the poles every period of revolution, whereas a location on the equator only crosses the orbital plane twice per day. Small data messages of 31 bytes may be transmitted. Furthermore, during a satellite pass the Doppler shift of the signal received by the satellite is used to locate the transmitter. Argos transmitters have no knowledge of satellite orbits and transmit their data at fixed intervals, typically 110 s. For further and detailed information refer to www.argos-system.org.

Argos satellite communication on Datawell buoys serves two purposes. One is for worldwide tracking of a buoy adrift when the buoy is out of reach of the HF receiving station. The other is for communicating basic position, wave, system and current information from remote locations on the ocean. The more recent 28 bit ID's as well as the earlier 20 bit ID's are both accepted.

Note: Please refer to *section 19.10.4* for the console `setup` options.

16.1 Installing the Argos antenna

Argos has its own dedicated antenna. It is packed inside the hull and must be inserted in the option port labelled ARGOS. Figure 16.1(a) shows the orientation of the Argos antenna on the hull. The ground plane radials are fixed to the main antenna using a single hexagon socket screw, see Figure 16.1(b). The ground plane radials are essential for correct operation of the Argos antenna.

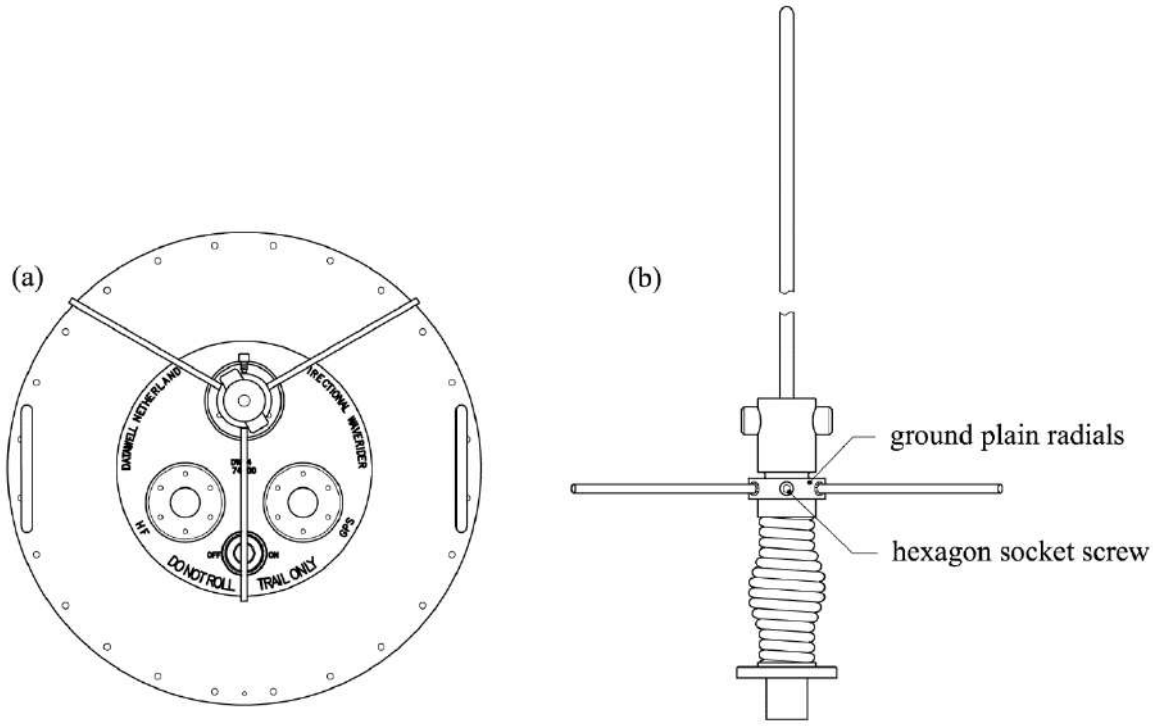

Figure 16.1 (a) Orientation of the Argos antenna and (b) Argos antenna radials.

16.2 Configuring the Argos transmitter

If the information is available before shipment Datawell has preconfigured the Argos transmitter with the correct Argos ID and transmit interval. Please provide decimal and hexadecimal ID. Otherwise contact Datawell service for assistance.

16.3 Argos message

Two Argos message are defined. The 0xFB0 message consisting of system, GPS position, wave parameter and current data and the 0xFB2 message consisting of the same information as the 0xFB0 but with additional Compact Air Temperature (CAT4) information. The 0xFB2 message must be enabled for a DWR4 buoy equipped with the CAT4 option.
Refer to the Datawell Waverider Transmission Protocol specifications for further information.

16.4 Email

The data retrieval of the Argos option is email based. We advise to use a dedicated email account for the Argos messages. Argos is a one-way satellite link which means it is only possible to receive data from the buoy and not possible to send emails to the buoy.
When registering the ARGOS data link, it is important to note the following additional information on the registration form:
Template: GEN-31*8Bits A2
ADS File name: DATAWELL_ADS_14161_
This will ensure that the buoy data will be attached to the email messages in the correct format.

The Waves4 software fully supports the storage, processing and presentation of received Argos emails. The PC does not have to be permanently on-line or permanently powered since emails will be buffered by the internet provider. As explained earlier, it is preferred to use a dedicated email account. A single account suffices for a network of Argos buoys. Please refer to the Quick Start Guide and section 4.3.3 of the Waves4 Operator manual for further information and correct configuration of the buoyd and waved services.

16.5 Argos specifications

Table 16.1 lists the specifications of the Argos option.

Table 16.1. Specifications of the Argos communication option.

Parameter	Value
message length	31 bytes
coverage	global
latency	up to 2 hours
maximum number of messages per day	12 on the equator, 84 at the poles
energy consumption	60 mW
position accuracy	5-10 m (GPS) <250 m - >1500 m - no accuracy estimate (Doppler)
transmitter ID compatibility	both 20 bit and 28 bit
transmitter power	0.5 W

17 Data logger

A data logger is standard on the DWR4. Data is logged on a compact-flash card inserted in a slot in electronics unit, see Figure 17.1. The logger stores the same data as transmitted over the HF link: raw displacements, calculated (directional) spectra, wave parameters, system information, etcetera. Logged files (binary) can be converted into CSV files using the Waves5 software or free available library *libdatawell*. Apart from data the logger also keeps a log of system events in "SYSLOG.TXT". This is useful for diagnosis. The standard compact flash card of 2 Gb will hold over 5 years of data. After that the oldest data is overwritten.

Figure 17.1 Logger flash card slot in the central block of the hatchcover electronics unit, with drive activity LED, metal clip and release button.

17.1 Removing the compact flash card

Next to the flash card there is a "drive activity" LED. It lights up whenever data is written to the flash card. Do not disconnect the main cable when the drive activity LED is on. Otherwise files on the flash card may be corrupted and data may be lost. There is a 5 second delay after the LED lights up and before data is actually written. So there is no problem should the LED light up just before you fully disconnect the main cable.

During the first half hour data are logged every 200 s. After that the buoy switches to half hour intervals synchronized to UTC time. Data from the last write-operation until the next are buffered and is lost when the buoy is switched off. To secure raw displacements allow half an hour. To secure calculated spectra of the raw displacements allow yet another half hour.

17.2 Compact flash card

To insert the compact flash card, push up the metal flash card lock. The compact flash card only fits in one way. The top side of the flash card (label) should face the metal lock. To eject the compact flash card push up the metal lock and press the release button on the side of the card.

Datawell recommends to only use Datawell supplied flash cards. Datawell supplies industrial grade flash cards which offer better solid state memory management and a wider operating temperature range than consumer grade flash cards. The default flash card has a data capacity of 1 Gb, sufficient for almost 1 year of data. Flashcard sizes up to 2 Gb can be handled.

17.3 Logger file format

The logger stores all data in the BVA format, Binary Vector format A. BVA data is the binary equivalent of the HVA data (Hexadecimal Vector format A) as transmitted over the HF link. BVA data are collected in files containing 4 days of data. The name convention of the files is

"YYYYMMDD.BVA"

where YYYY is year, MM is month, and DD is day. The date refers of the first day of the data in the file. For example, the file “20181105.BVA” contains data from November 5, 6, 7 and 8 2018. Every new month a new file starts, leaving the last file of the month with a variable number of days. The logger generates about 462 Mbyte of BVA data per year. BVA files can be read by the Waves5 software. For more information about the BVA (and HVA) format refer to the “Datawell Waverider Transmission Protocol” specifications.

17.4 Preparing the logger

Compact flash cards provided by Datawell will already be erased and formatted in the right way. However, when you obtained your flash card locally or the flash card has been used before, be it only for testing, preparation of the flash card is required. Mainly, the flash card must be properly formatted and erased before installing it in the logger. Without the correct file format system the buoy logger will not recognize the flash card. Please carry out the following actions, assuming a Windows PC.

Check file format system

(1) Insert the flash card into a flashcard reader.
(2) Locate the flash card (i.e. E:\), this can be done by clicking on “my computer”.
(3) Right-click your mouse on the flash card icon (mounted as a drive) and select “properties”. Verify that the file system is “FAT” or “FAT16”. File systems such as “FAT12” or “FAT32” or “NTFS” are not suitable.

Change file format system

(1) If the file system is anything other than “FAT” or “FAT16”, reformat the flash card.
(2) Right-click your mouse on the flash card drive and select “format”.
(3) Select “FAT” or “FAT16” and reformat your flash card.

Erase all files

(1) Delete all files present on the flash card.
(2) If you cannot delete all files, repair the disk using the chkdsk-command as described in the next subsection.

17.5 Retrieving logger files

After ejecting the compact flash card insert it into a card reader and copy the collected data to your hard disk. Sometimes a few files or even the whole flash card cannot be read. Several causes may result an invalid flash card or corrupted files, e.g. exhausted batteries at the end of the operational life, disconnecting the power during a write-operation or a firmware crash during a write-operation. Windows provides a utility (check disk) to repair the flash card and sometimes to restore the corrupted files. Follow the procedure on the next page.

Procedure for repairing a corrupted compact flash card.

(1) First save a copy of all readable files to your hard disk.
(2) Either invoke the DOS prompt or go to “Start”, select “Run” and type “cmd<enter>” or “command<enter>”.
(3) Type “chkdsk <DRIVE> /F”. For example: `chkdsk E: /F`
(4) The check disk-utility will perform a disk scan, repair the FAT and print a report.
(5) Copy all newly repaired files to your hard disk.
(6) After repair it is also possible to erase all files, should you redeploy this flash card.

17.6 System log file

The system log file is always named SYSLOG.TXT. Note that this is a human readable text file that does not contain data. It does contain a log of several events, normal and unintended, in order to trace buoy behaviour during testing or deployment. Table 17.1 gives a list of possible events. In case you experience any buoy problems and you intend to contact Datawell Service please include this log file in your email or keep it at hand when calling.

Table 17.1. List of possible events logged.

Event string	Origin
`comm error`	ARG
`communication successful`	IBUOY
`error [x]`	IBUOY
`connection time` *xx* `s, on-time` *xx* `s`	IBUOY
`transmitted` *xxx* `bytes, received` *xxx* `bytes`	IBUOY
`DWTP data buffer full`	IBUOY
`ADC timeout`	DWR
`fix not found`	GPS
`resetting`	GPS
`R-channel buffer overflow`	HFL
`P-channel buffer overflow`	HFL
`buoy started`	SYS
`clock set`	SYS
`hull main module timeout`	SYS
`firmware version F[xxx.xx] build [xxxx] [date]`	SYS
`hatch s/n [xxxxx]`	SYS
`hull s/n [xxxxx]`	SYS
`no hull detected`	SYS
`link restored`	SBD
`link disabled`	SBD
`time out`	SBD
`error`	SBD
`comm error`	ACM
`Received config, id =` *xxx*`, interval =` *xxx*`, offset =` *xxx*	COMM
`Measurement failed`	CAT4

18 Starting the buoy

Before powering the buoy, first all antennas should be put in place. This will protect transmitter electronics and allows to check the various communication links. Small antennas such as for GPS position are already mounted. Medium size antennas such as Argos are packed inside the hull and the long HF/LED whip is packed separately.

To switch ON the buoy, unscrew the hatchcover from the hull, connect the main cable from the hull control unit to the hatchcover connector (Figure 18.1) and put the hatchcover back in place (leaving out the screws for now). In case an external switch is installed, it is switched OFF by default. Unscrew the nut and flip the switch to ON.

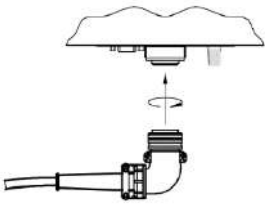

Figure 18.1

The start-up sequence is described in the section below. During and after start-up you can check the LED flasher on top of the whip, try some requests and commands over the console and observe data over the various communication links.

18.1 Start-up sequence

After powering the buoy it will start up following a fixed pattern. This section explains what happens when. This may be helpful if you want to check healthy operation or if you are waiting for particular data.

Figure 18.2 schematically shows what happens during the first few minutes of operation. Below that the start of various processes is described in chronological order.

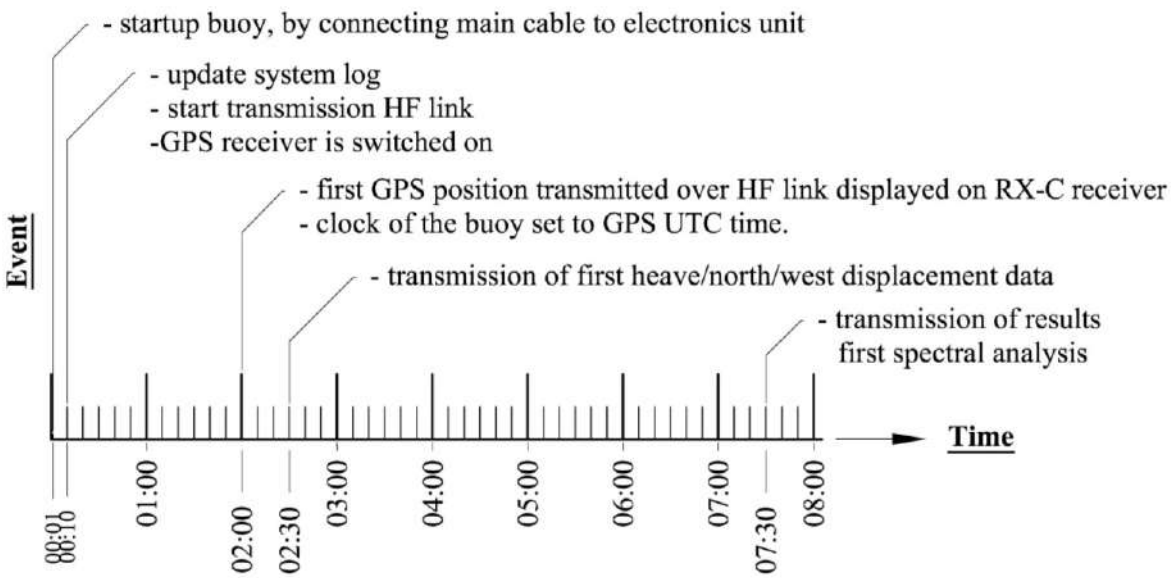

Figure 18.2 Buoy starting sequence.

- **@ around 0:00 minutes**
  Immediately after connecting the main cable, the drive activity LED will flash quickly for about 10 seconds. This indicates the startup phase. Once the 10 second startup phase is finished, the system will start operating.
- **@ around 0:10 minutes**
  The system log on the flash card will be updated.
  The HF link will start transmitting.
  The GPS receiver is switched on.
- **@ around 2:00 minutes**
  The first GPS position will be transmitted over the HF link and displayed on the RX-C receiver and the internal clock of the buoy will be set to the GPS UTC time. (Only if the buoy is receiving good GPS signals.)
- **@ around 2:30 minutes**
  The buoy will start transmitting the first heave/north/west displacement data.
- **@ around 7:30 minutes**
  The buoy will start transmitting the results of the first spectral analysis.

Other sensors (such as the sea surface water temperature and Acoustic Current Meter) are controlled by the internal clock. As the internal clock is not set until the first GPS fix these sensors may start transmitting their first data sooner or later than expected.

The LED flashlight at the top of the HF antenna will flash its pattern unconditionally during the first 5 minutes after start-up.

During the 10 seconds start-up phase, power may be removed at any time without corrupting the contents of the flash card. **After the 10 second start-up period, power may only be removed when the drive activity LED next to the logger flash card is switched off.**

19 Hull and hatchcover

Hull and hatchcover form a watertight compartment that provides buoyancy and houses batteries, sensors and electronics. This section only describes all items on the exterior and some basic functions in the interior of the compartment.

19.1 AISI316 and Cunifer10

The hull has three functions: providing buoyancy and protecting the sensors and electronics inside from water and impacts.

At 0.9m diameter the buoyancy force initially increases 62 N with every cm of immersion. Just before full immersion the buoyancy of a 0.9m diameter hull including chain is 1630 N (and for a 0.7m diameter hull including chain it is 820 N). For loads on the buoy larger than this threshold the buoy will sink.

Datawell hulls are designed to withstand head-on collisions. Ship collisions typically are not fatal although the buoy will be dented. If the propeller screw hits the buoy, then the buoy will be damaged but even than it can often be repaired. The hull of the DWR4/ACM stays watertight even if largely deformed.
Datawell provides two hull types for the DWR4 (/ACM), AISI316 stainless steel and Cunifer10. Cunifer10 is a copper-nickel alloy. Though its strength is less than that of AISI316, it can take large deformations. Furthermore, Cunifer10 is a good alternative to anti-fouling paint (see section 24.2). Because of the copper and nickel, the hull does not pit and reduces fouling.
For galvanic and anti-fouling reasons we strongly advise to paint only the upper half of a Cunifer10 hull.

Please refer to chapter 24 for additional information on the AISI316 hull.

19.2 Mooring eye

The eccentric mooring eye is located underneath transducer 1 (front side) and is used to attach the mooring.

19.3 Fender

The fender serves no wave measuring purpose, although it may damp resonant pitching, rolling and immersing somewhat. It mainly protects users from the sharp welding edge of the two hull semi-spheres when handling the buoy on deck or in a laboratory. To inspect for corrosion under the fender you may force it off and on by rolling it over the hull.

19.4 Anti-spin triangle

To protect the motion sensor and optionally the three acoustic transducers of the DWR4/ACM, the installation of an anti-spin triangle is highly recommended in the following situations: if nearby passing ships are to be expected, if the buoy is adrift and washes ashore or if the buoy is transported out of its packing frame. Lift the triangle over the buoy and lower it on to the fender. Position the triangle in a way that each of the three points of the triangle is exactly above one of the transducers. Use two screw bolts and one plate on all three touching sides to attach the triangle. Figure 19.1 shows how to place the triangle on the fender and fasten the bolts. Sacrificial anodes that fit around the tubes are available to protect the stainless steel triangle from corrosion.

If you expect difficulties in transporting the buoy with the triangle in place, you may delay mounting it until the buoy is on board the ship.
The anti-spin triangle can also be used to hoist the buoy in a retrieving/deployment procedure, provided that the triangle is mounted correctly and in good condition.

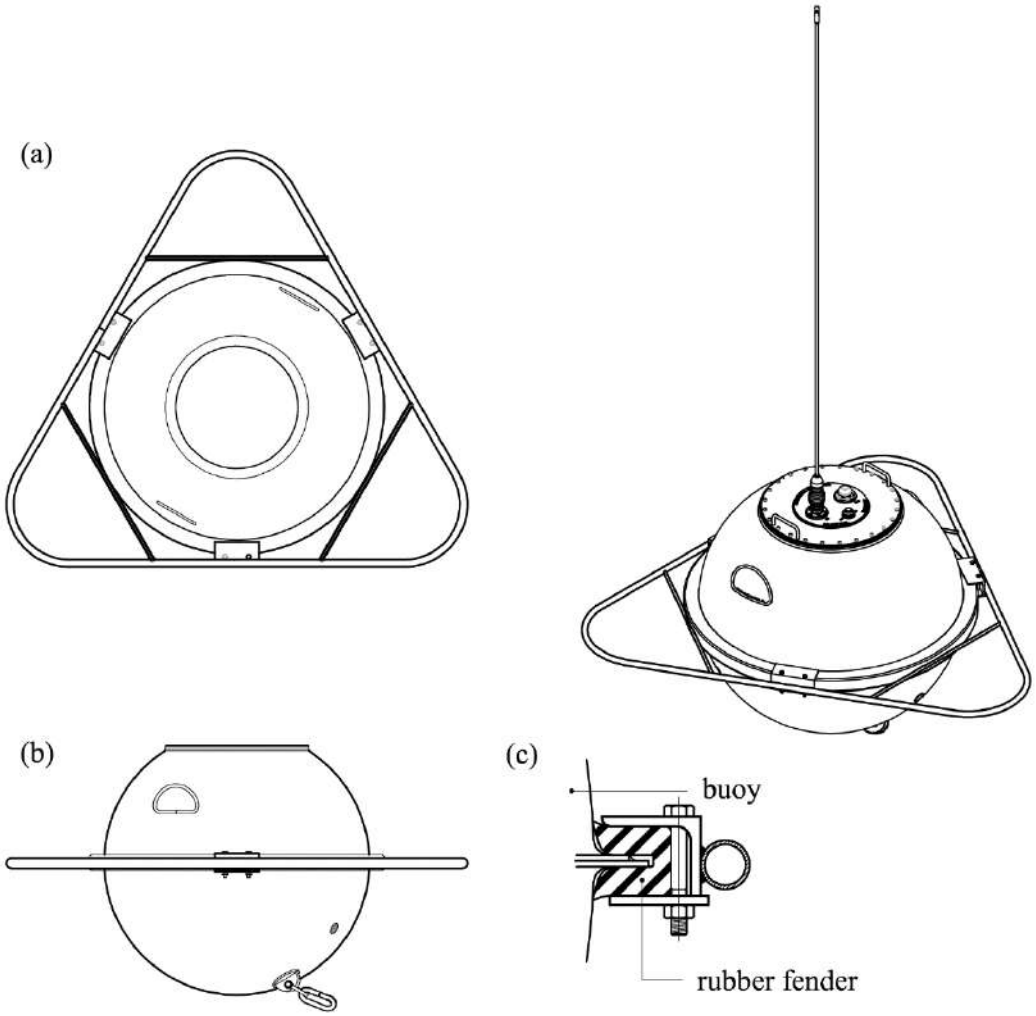

Figure 19.1 Anti-spin triangle mounting and orientation on the DWR4.

19.5 Handles

When lifting or moving the buoy you can use the two handles welded onto the hull top side. We recommend using two handles to carry the load of the buoy. Safe working load of a single hull handle for the AISI316 buoy is 1000 kg and for the Cunifer10 buoy 600 kg. The handles on the hatchcover are solely intended for lifting and carrying the hatchcover alone.

19.6 Flange and FS direction

Through the flange the interior of the buoy can be accessed. Almost all parts within the hull can be serviced or even replaced through this flange. A small face on the side of the flange indicates the Forward Ship (FS) direction. Horizontal accelerometers, acoustic transducers, compass and pitch-roll sensors of the DWR4 are referenced to this direction.

19.7 Drying agent bags, plywood

As mentioned only a few items on the interior will be described here. To protect the electronics inside the hull from condensing water vapour one bag of drying agent is packed in the hull. Perforated sealing bags are used to slow down the drying process. The colour of the humidity indicator should be blue. If the colour has turned pink, the paper bags (without plastic sealing bag) should be dried at a maximum temperature of 110 ºC for 12 hours. After drying, put the paper bag back into the plastic bag. To prevent unnecessary moisture saturation of the drying agent, close the hatch whenever the buoy is not in use.

19.8 Hatchcover and option ports

The hatchcover closes the buoy and has several communication antenna and sensor options mounted onto the hatchcover. It is fastened with 24 hexagon socket screw-bolts in 24 countersinking holes. In case of partial vacuum in the hull, the hatchcover may be lifted by screwing one of the hexagon socket screws in the additional threaded lifting hole. When closing the hatchcover, carefully inspect the rubber sealing ring and the groove in the flange for dirt, cuts and scratches. Take care that the rubber sealing ring is properly fitted in the groove before positioning the hatchcover otherwise water may enter the buoy.
Do not over-tighten the screws-bolts. Figure 19.2 depicts the top and bottom side of the hatchcover.
On the bottom side of the hatchcover the electronics unit is fixed with three removable feet. The top side either has two, three or four ports. Two ports are fixed and labelled HF-LED and GPS. The optional third/fourth port are used for GSM communication and/or satellite links (e.g. Iridium-SBD, Iridium-Internet or Argos). Each port receives the respective communication antenna. Construction and mounting are similar to that of the hatchcover and the hull flange, see Figure 19.3. When placing the respective insert an electrical coaxial connection is made simultaneously. Unused ports should be closed with an O-ring and blind flange. All ports and connectors are waterproof. Hence, even with unclosed ports or damaged and leaking inserts no water can enter the hull. Nevertheless, short-circuiting the connector may affect the buoy operation. The hatchcover handles are solely intended for lifting the hatchcover with electronics unit and antennas. **They must not be used for lifting the buoy!**

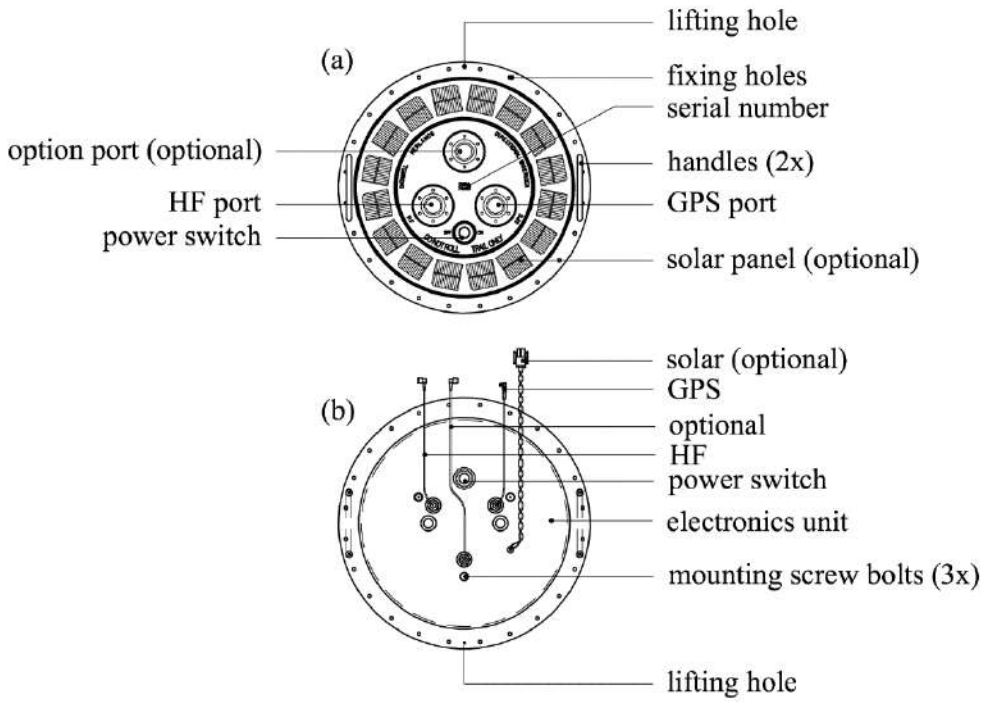

Figure 19.2 Top (a) and bottom side (b) of the hatchcover.

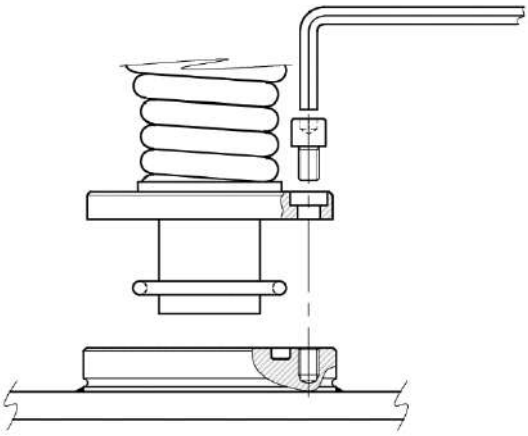

Figure 19.3 Mounting instruction for any option insert in the corresponding option port.

19.8.1 4-port hatchcover

The Datawell Waverider offers a wide range of data communication options. The HF communication is always considered to be 'the standard' communication option. It offers the real-time displacement information together with all calculated spectral data, system file information and meteorological information.
A secondary satellite or GSM communication option can be added to the buoy. These communication options can be configured to a set transmission interval and will default provide spectral information and parameters.

The most common combination is HF and Iridium SBD. This offers real-time information and the assurance that a drifting buoy still can be located when out of HF range.
A GSM communication option is a good addition or alternative to the HF real-time data transmission. For some locations or data requirements a GSM communication option is not viable and a satellite data communication is required. A combination of all **three** communication options would be the perfect match.

The flexible design of the Datawell communication options makes it possible to enable/disable each option individually without removing any of the boards. We understand that your Waverider buoy will be used in different projects with different demands in a variety of circumstances. Now you can decide which communication option or combination of communication options is best fit for your purpose.

An extra communication option requires an extra physical antenna port on the hatchcover. Therefore we introduced the 4-port hatchcover; GPS, HF-LED, GSM and Iridium SBD, see Figure 19.4.

Figure 19.4 – 4-port hatchcover; GPS, HF-LED, GSM and Iridium SBD

19.8.2 Electronics unit configuration

The electronics unit consists of the following electronics boards:

- Processor board
- Power controller board
- GPS board
- HF transmitter board
- 4G GSM board
- Iridium SBD board

The processor board contains the buoys firmware, instructions on how to deal with the buoy's measurements and to provide the information to the user. The Power controller board controls the battery power and is connected to the power switch. In case of a solar panel, this board controls if the buoy is either powered by the solar energy or battery power.
The GPS board together with the GPS antenna will obtain global positioning latitude and longitude and set the UTC time in the buoy. This board is installed on top of the processor board.
The HF transmitter board is equipped with a crystal (25.5 – 45 MHz) and transmits buoy information in real-time to shore and is installed on top of the processor board.
The GSM board contains a uBlox TOBY modem and supports 4G GSM transmissions and is connected to both the processor board and Iridium SBD board.
The Iridium SBD board contains a 9602 Iridium transceiver and is connected to the GSM board.

All boards are inter-connected via blue ribbon (communication) cables and 3 wire power cables. Both the Serial-B and Serial-C connectors are connected to the GSM board. Serial-B is used for communication with the GSM board and Serial-C for communication with the Iridium SBD board.

Figure 19.5 Overview of an electronics unit configuration with GSM and Iridium SBD

19.9 Console setup

19.9.1 Terminal settings

When preparing or servicing the buoy the console provides a comfortable interface to communicate with the buoy. A simple terminal program suffices for configuring and monitoring the buoy. Three modes of operation are available:

(1) standard mode
(2) verbose mode
(3) HVA-emulation mode

In standard mode the user may command several buoy actions or responses. Furthermore, the user will receive event messages generated autonomously by the buoy. For trouble shooting the user can enter verbose mode, thereby extending the range of event messages generated within the buoy. Finally, in HVA-mode the buoy will emulate a Datawell RX-C4-receiver. Linking the console directly with your Windows (or Linux) PC running the Waves5 software will result in immediate on-screen display of the raw displacement measurements.

In the subsection below a list of commands will be provided including a description of the buoy action or response. The subsection after that gives the list of event messages in standard mode only. Verbose mode messages are only useful for Datawell Service to diagnose a problem. In that case you may be asked to email a file of event messages generated by your buoy in verbose mode.

To set up the console connect a serial cable to the 9-pin female plug on the electronics unit and to your terminal or PC. The terminal or terminal-emulation program and serial port should be configured as follows:

- Line feeds should be added to incoming carriage returns.
- Local echo should be turned off.
- Terminal mode is not critical, as the console uses no special formatting.
- RS232 interface
- 9600 baud
- 8 data bits, 1 start bit, 1 stop bit
- no parity, no flow control

19.9.2 Commands

Once the link has been established commands may be entered and messages can be received. User commands are entered as lower-case words without any spaces. For example, `setup <enter>` allows the user to set the buoy configuration. The following commands will not be recognized, `set up` or `Setup`. All output generated by the console is in normal human-readable form, except in HVA-mode.

Table 19.1 gives an overview of all available commands in random order. The list contains commands for configuration, testing and trouble shooting.

Table 19.1. Overview of buoy commands.

Command	Meaning
`reset`	Reset buoy
`help`	Show available commands
`setup`	Enter buoy setup
`status`	Report status (time, GPS position, energy counters, sea surface water temperature, orientation, inclination)
`verbose`	Set console to verbose mode
`stdout`	Set console to standard mode
`version`	Show firmware version and build number
`statuscat4`	Report the results of latest CAT4 measurement
`forcecat4`	Force the CAT4 to start a new measurement. Results will be reported after measurement
`forcetcp`	Force the buoy to establish a TCP connection (only for Iridium- or GSM-internet)
`statusacm`	Report the results of latest ACM measurement
`forceacm`	Force the ACM to start a new measurement. Results will be reported after measurement

19.9.3 Messages

As mentioned the buoy will generate messages autonomously and in response to user commands. Table 19.2 lists all messages that may appear in standard mode. In verbose mode additional messages will appear, these are not listed in this manual.

Table 19.2. Overview of buoy messages in normal mode.

Buoy message	Origin
`Resetting ADC`	DWR
`Comm error`	ARG
`Flashcard not installed or write error`	LOG
`Error [xx]`	IBUOY
`Starting`	IBUOY
`Connected to server`	IBUOY
`Communication successful`	IBUOY
`DWTP data buffer full`	IBUOY
`link restored`	SBD
`link disabled`	SBD
`Time out`	SBD
`Error`	SBD
`IMEI =` *xxxxx*	SBD
`Communication succesfull`	SBD
`Measurement OK`	ACM
`Not installed`	ACM
`Measurement already started`	ACM
`Measurement started, this will take several minutes`	ACM
`Measurement started, please wait`	CAT4
`Measurement OK`	CAT4
`Measurement failed`	CAT4

19.10 Buoy options setup

A menu is provided to enter all buoy settings. The menu is invoked by the `setup` console command.

19.10.1 GSM internet setup

The GSM internet communication option has multiple settings to configure and are listed below.

```
***BUOY SETUP***
1 iBuoy mode                    = ON
2 Buoy ID                       = Buoy 1
3 Transmission interval         = 0:30 (h:mm)
4 Primary dial script           =
d20sAT&F#~sAT&K0#~sAT+CGDCONT=2,"IP","apn"#~sAT+CGDATA="PPP",2#~w60CONNECT~p,~
5 Primary hostname/IP address   = 81.4.80.140
6 Primary portnumber            = 1168
7 Backup dial script            =
d20sAT&F#~sAT&K0#~sAT+CGDCONT=2,"IP","apn"#~sAT+CGDATA="PPP",2#~w60CONNECT~p,~
8 Backup hostname/IP address    = 81.4.80.140
9 Backup portnumber             = 1168
0 exit
>
```

The menu has nine settings which are explained in the following sections.
The menu is closed by selecting option 0. Upon exit, the user is asked to reset the system for settings to take effect. The new settings are saved to the configuration memory.

To test the settings, the `forcetcp` console command is used. This command may be executed at any time and will initiate the communication that is identical to a normal, scheduled communication. It is recommended that new settings are always tested before the buoy is deployed.

19.10.1.1 Setting the iBuoy mode

The GSM-internet communication is referred to the abbreviation “iBuoy” (**i**nternet **Buoy**).
Option 1 of the BUOY SETUP menu allows you to disable/enable the iBuoy communication option.
Removing the SIM-card is not the correct procedure to disable the iBuoy communication option!

19.10.1.2 Setting the Buoy identification string

Option 2 of the BUOY SETUP menu allows you to enter the buoy identification string. The buoy identification string is used to let the buoy identify itself to the *Waves5 software*. When multiple buoys are being used, the identification string is useful for discerning between the different buoys. The buoy identification string can be any text chosen by the user and must be less than 32 characters long.

19.10.1.3 Setting the communication interval

Option 3 of the BUOY SETUP menu allows you to enter the communication interval. The communication interval specifies how often the buoy will attempt to make contact with the destination host. The available transmission intervals are specified in *Table 15.2*.
The transmission intervals are "aligned" to the buoys internal half-hour measurement cycles, you can expect the buoy to contact at hh:15 and hh:45.

NOTE: The buoy has a limited buffer where messages are stored. It can store all available DMF messages up to 6 hours. The buffer will be erased when full.

19.10.1.4 Setting the dial scripts

Option 4 and 7 of the BUOY SETUP menu allows you to enter the dial scripts. There are two dial scripts: primary dial script and backup dial script.
Each dial script consists of a series of simple commands. The script must be less than 128 characters long. These commands tell the buoy to send strings to the modem, wait for certain responses and start actual internet communication. Each dial script also contains an APN (Access Point Name), login and password of the Internet Service Provider (ISP). Therefore, before entering the dial script, an account with the ISP must be set up first. Creating a dial script might look complicated but, luckily, you are only required to deal with a couple of commands. Usually, the internet service provider provides you with the APN, a login and a password. This is all the information required to successfully configure a dial script. Figure 19.6 shows an example of a default template that can be used universally. In this template only the APN, login and password have to be modified.

*d20sAT&F#~sAT&K0#~sAT+CGDCONT=2,"IP","<**APN**>"#~sAT+CGDATA="PPP",2#~w60CONNECT~p<**LOGIN**>,<**PASSWORD**>~*

This is the default *GSM-internet script* used to connect to a normal ISP. ***<APN>*** is the Access Point Name of the provider and ***<LOGIN>*** and ***<PASSWORD>*** are the account's user name and password respectively.

Figure 19.6 GSM internet dial script

19.10.1.5 Setting the hostname and ports

Option 5, 6, 8 and 9 of the BUOY SETUP menu allows you to enter the hostname/IP-addresses and port. The destination addresses and ports tell the buoy where the *Waves5 software* is running. In other words, they contain the internet addresses of the computer where the data must be send to. The addresses consist of two parts, the address itself and the port number. The address itself may be either a straight IP address (for example 81.4.80.140) or a domain hostname (for example hwd.datawell.nl). The buoy differentiates between the two by looking at the first character of the address. If it is a number, the address is assumed to be a straight IP address, otherwise it is assumed to be a domain hostname. The domain host name is resolved by a built-in DNS client. The address must be less than 32 characters long. Valid port numbers are between 0 and 65535. The exact port number is determined by the *Waves5 software* configuration on the destination computer. Please refer to the *Waves5 user manual* for more information. There are two address/port settings; primary and backup.

19.10.1.6 Backup scripts, hostname and ports

The backup versions of the dial script and host address settings are very important because the buoy always takes the initiative when setting up a communication session. If, for example, the primary internet service provider decides to change its APN, communication cannot be set up and the buoy cannot be contacted at all! It is therefore important that the backup settings are

configured to a secondary internet service provider and host address in case the primary settings fail.

19.10.2 Iridium SBD setup

The Iridium SBD communication option can only be disabled or enabled. All other configuration is set via email configuration messages, see section 3.3.

```
***IRIDIUM SBD SETUP***
1 SBD mode = ON
0 exit
1

*** Options for SBD mode ***
0 = OFF
1 = ON
Enter selection:
1
```

19.10.3 Iridium internet setup

The Iridium internet communication option shares the same setup as the GSM internet communication option. Please refer to section 19.10.1.
Only the dial script, series of commands, is different from GSM internet communication option.

```
***BUOY SETUP***
1 iBuoy mode                    = ON
2 Buoy ID                       = Buoy 1
3 Transmission interval         = 0:30 (h:mm)
4 Primary dial script           =
d10sAT&F#~sAT+CBST=71,0,1#~csAT+CSQ#~w20>03~sATD<DIAL>#~w60CONNECT~p,~
5 Primary hostname/IP address   = 81.4.80.140
6 Primary portnumber            = 1168
7 Backup dial script            =
d10sAT&F#~sAT+CBST=71,0,1#~csAT+CSQ#~w20>03~sATD<DIAL>#~w60CONNECT~p,~
8 Backup hostname/IP address    = 81.4.80.140
9 Backup portnumber             = 1168
0 exit
```

Figure 19.7 shows an example of a default template that can be used universally for Iridium internet communication. In this template only the telephone number, login name and password have to be changed.

*d10sAT&F#~sAT+CBST=71,0,1#~csAT+CSQ#~w20>03~sATD**<DIAL>**#~w60CONNECT~p**<LOGIN>**,**<PASSWORD>**~*

This is the default *Iridium dial script* used to connect to a normal ISP. ***<DIAL>*** is the full (international) dial-in number of the provider and ***<LOGIN>*** and ***<PASSWORD>*** are the account's user name and password respectively.

Figure 19.7 – Iridium internet dial script

19.10.4 Argos setup

The Argos communication option can only be disabled or enabled. Other configuration already configured in factory mode.

```
***ARGOS SETUP***
1 Argos mode = ON
0 exit
1

*** Options for Argos mode ***
0 = OFF
1 = ON
Enter selection:
1
```

19.10.5 HF setup

The HF communication option can only be disabled or enabled. No other configuration is necessary.

```
***HF SETUP***
1 HF mode = ON
0 exit
1

*** Options for HF mode ***
0 = OFF
1 = ON
Enter selection:
1
```

19.10.6 LED setup

The LED flasher mode and flasher pattern can be configured individually.
For the flasher mode you can either select the “always ON” or “ON/OFF (GPS)” mode. By default, the flash light is active during the night. The times of sunrise and sunset are calculated based on the location and time obtained from the GPS receiver (select “ON/OFF (GPS)”). For better visibility, it’s possible to have the flash light always active (select “always ON”).

The LED flashlight gives 5 flashes in 10 seconds and repeats this every 20 seconds, select the “standard pattern” for this default mode.
For better visibility, an alternative flash pattern is available. This increased flash rate repeats every 15 seconds, select the “Increased flash rate for this mode.

```
***LED SETUP***
1 flasher mode = ON/OFF (GPS)
2 flasher pattern = Increased flash rate
0 exit
1

*** Options for flasher mode ***
0 = always ON
1 = ON/OFF (GPS)
Enter selection:
1

***LED SETUP***
1 flasher mode = ON/OFF (GPS)
2 flasher pattern = Increased flash rate
0 exit
2

*** Options for flasher pattern ***
0 = Standard pattern
1 = Increased flash rate
Enter selection:
0
```

19.10.7 ACM setup

The ACM (Acoustic Current Meter) option can only be disabled or enabled. No other configuration is necessary.

```
***ACM SETUP***
1 ACM mode = ON
0 exit
1

*** Options for ACM mode ***
0 = OFF
1 = ON
Enter selection:
1
```

20 Batteries and power

The standard power supply for Datawell buoys are non-rechargeable (primary) batteries to guarantee autonomous operation under all conditions. Datawell supplies non-magnetic cells. The DWR4 buoy specifically requires non-magnetic batteries in order not to disturb the magnetic compass.

Operational life of the buoy on a standard set of batteries depends on the set of buoy functions and options and, most important, if the batteries are used in a continuous period. **If the batteries are used with large intervals of interruption then the battery life will rapidly deteriorate.**

20.1 Datacell primary cells

At the moment Datawell supplies 1 cell model for the DWR4, see Table 20.1. The voltage per cell is about 1.6 V for fresh cells and 0.7 V for exhausted cells. Self-discharge of the cells is less than 2% per year. The cells have a cylindrical shape with a diameter of 65 mm and a height of 205 mm (including connectors). Different connectors are used for the anode in the centre and the cathode near the edge to prevent reversed cells in a series connection. Batteries have a best before date imprinted on it which also serves as a batch number.

Table 20.1. Battery for DWR4.

Manufacturer	Cell colour	Type	Technology	Energy content (Wh)	Magnetic	Primary
Datacell	Black	RC27B	Alkaline	270	No	Yes

20.2 Battery replacement and wiring 0.9m DWR4/ACM

The batteries are organized in 2 series of 15 cells which are connected in parallel. Each battery has a capacity of 270 Wh, making a total capacity of 8100 Wh.

To access the batteries within the hull the hatchcover must be removed first. Removal of the HF/LED whip antenna is not obligatory but will make handling the hatchcover more comfortable. Unscrew the wing nuts retaining the plywood boards. Now remove the foam cover on top of the batteries.

Before disconnecting the battery wiring, first mark the used batteries. Disconnect the battery wiring and take out the used batteries. It is recommended to replace one series at a time. Place the new batteries starting with battery A1 in clockwise direction and interconnect the batteries. Figure 20.1 shows the battery numbering, wiring and grouping. Cells in one series are sequentially numbered 1, 2, 3, etc. and consecutive series are labelled A and B. Use connection wires of the indicated colour for each series. Connect the black leads of the buoy's main hatchcover cable to the positive pole of each series and the respectively coloured leads to the negative pole.

The connection wires are arranged in such a way that a marginal magnetic field is generated by the currents. This is to minimize the disturbance of the fluxgate compass. It is therefore essential that the connection wires are always routed exactly according to the wiring diagram. In general, the Waverider buoy will function and measure correctly even when it pitches and rolls either temporarily or permanently. However, for GPS reception, HF transmission and ACM measurements, it is beneficial to keep it upright as far as possible. With a weight of nearly 1.5 Kg per cell it is important to distribute the weight evenly. In particular for the ACM option and

eccentric mooring eye, the batteries should be distributed unevenly to balance the eccentric ballast chain weight. Maintain the distribution as outlined in Figure 20.1.
Check the voltage of each series on the hull control unit. Fill empty spaces with foam rubber and also cover the batteries with a (dry) foam cover. Apply and fasten the plywood boards. Always close the hatchcover directly after battery replacement to prevent the taking up of moisture by the drying agent. Leave the main hatchcover connector disconnected if the buoy will be stored for a long time.

Please notice when servicing the batteries:
- Place batteries in the locations shown in order to maintain a proper buoy weight balance.
- Route battery wiring as shown in order to minimise current loops and associated effects on compass readings.
- Use Datawell non-magnetic batteries only.
- Do not use empty batteries as ballast in the buoy. Dispose the empty batteries immediately after use.

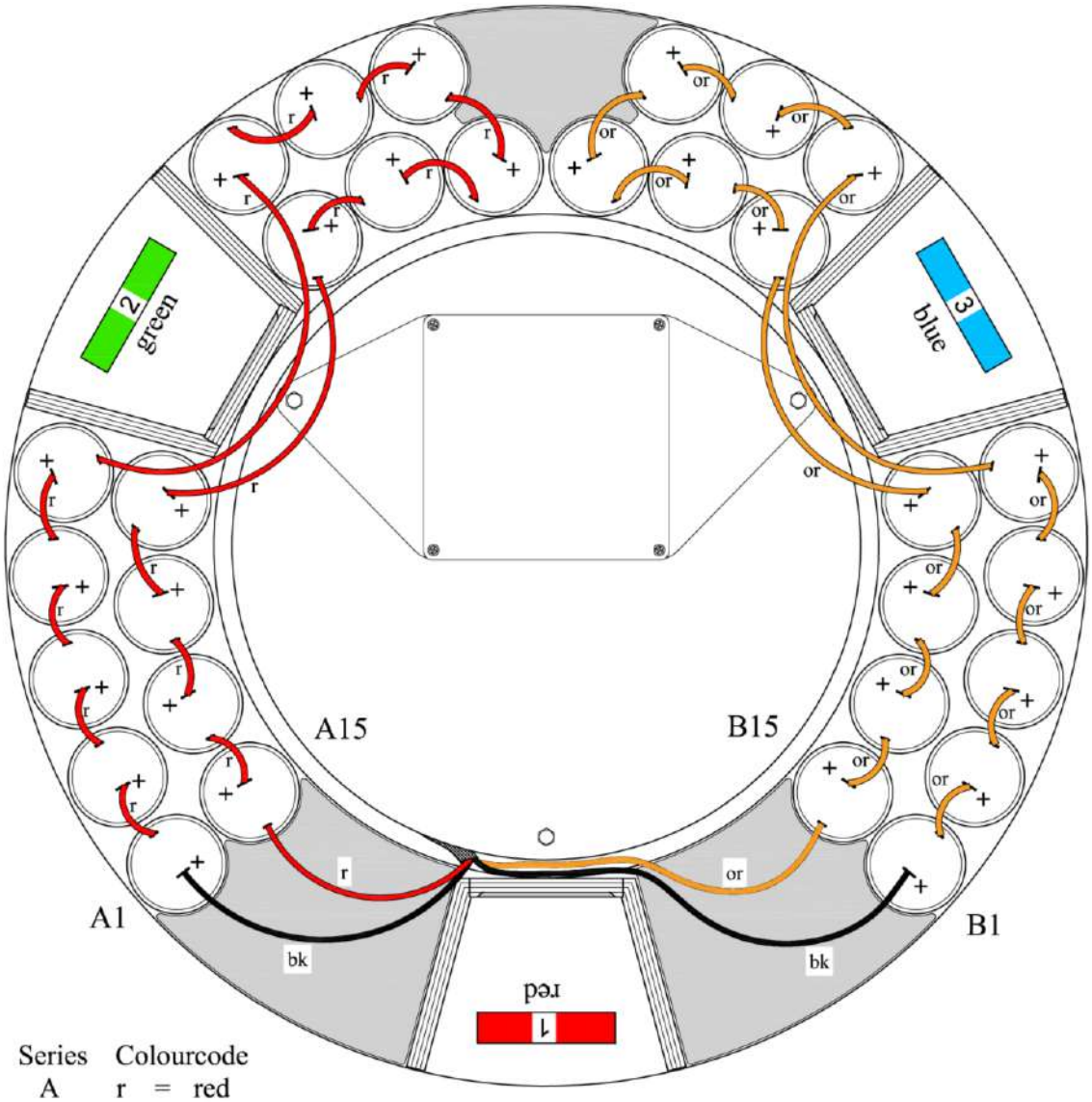

Series	Colourcode
A	r = red
B	or = orange
	bk = black

Figure 20.1 Battery numbering, wiring and grouping for a 0.9m diameter DWR4/ACM.

20.3 Battery replacement and wiring 0.7m DWR4/ACM

The batteries are organized in 1 series of 15 cells. Each battery has a capacity of 270 Wh, making a total capacity of 4050 Wh.

To access the batteries within the hull, the hatchcover must be removed first. Removal of the HF/LED whip antenna is not obligatory but will make handling the hatchcover more comfortable. The red battery wires are immediately visible and can be disconnect. After that, unscrew the 6 Delrin nuts retaining the 3 PVC boards. Before removing the batteries it is advised to mark the used batteries first.

Place the new batteries starting with battery A1 in clockwise direction and interconnect the batteries with original interconnection wires. Figure 20.2 shows the battery numbering and wiring. The cells are sequentially numbered 1, 2, 3, etc. Connect the black lead to the positive pole of the serie and the red coloured lead to the negative pole.

The connection wires are arranged in such a way that a marginal magnetic field is generated by the currents. This is to minimize the disturbance of the fluxgate compass. It is therefore essential that the connection wires are always routed exactly according to the wiring diagram!

Once the batteries are replaced and connected, check the voltage of the serie on the hull control unit. Always close the hatchcover directly after battery replacement to prevent the taking up of moisture by the drying agent. Leave the main hatchcover connector disconnected if the buoy will be stored for a long time.

Please notice when servicing the batteries:
- Route battery wiring as shown in order to minimise current loops and associated effects on compass readings.
- Use Datawell non-magnetic batteries only.
- Do not use empty batteries as ballast in the buoy. Dispose the empty batteries immediately after use.

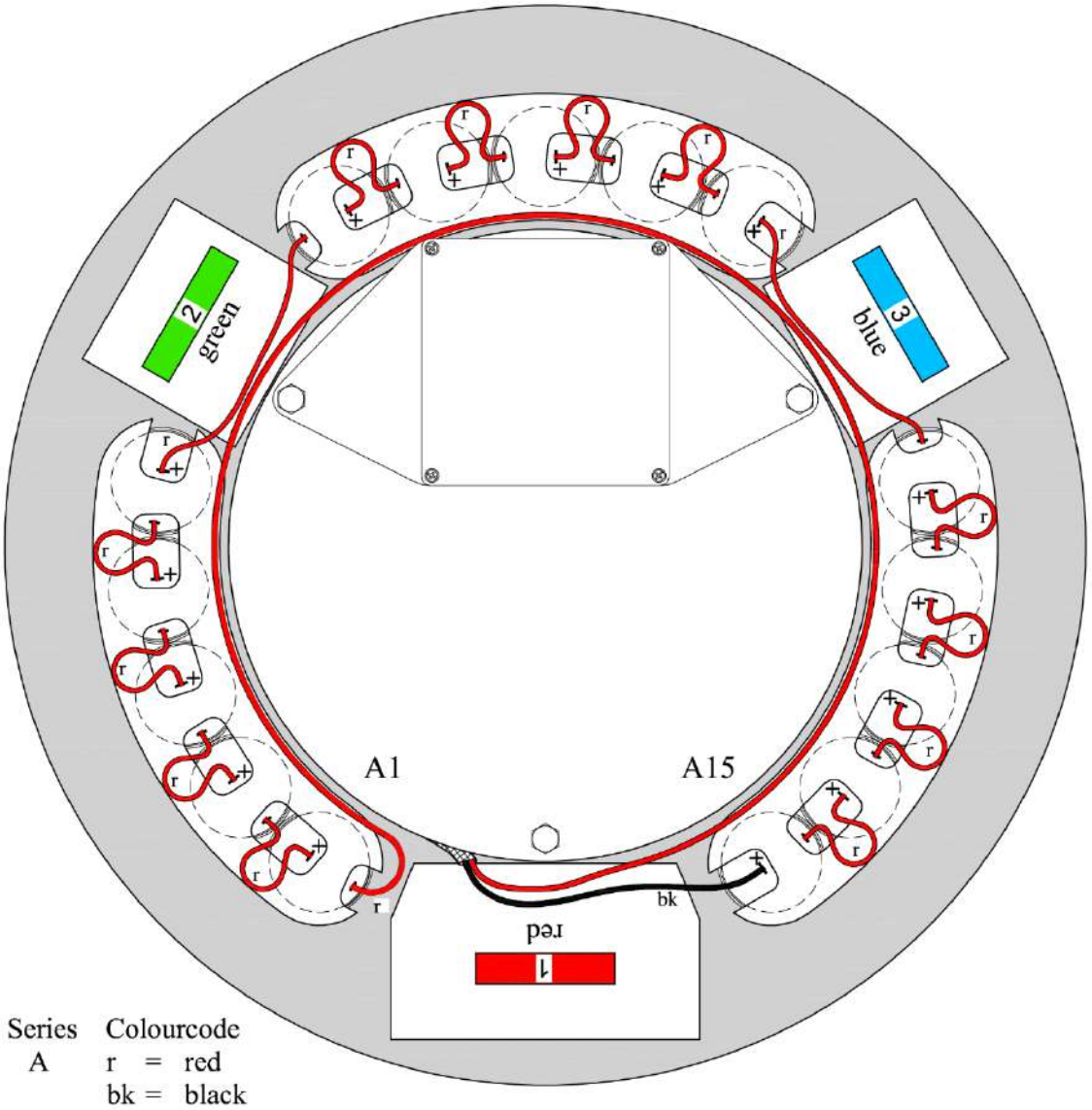

Figure 20.2 Battery numbering, wiring and grouping for a 0.7m diameter DWR4/ACM.

20.4 Battery replacement and wiring 0.9m DWR4

The batteries are organized in 3 series of 15 cells which are connected in parallel. Each battery has a capacity of 270 Wh, making a total capacity of 12150 Wh.

To access the batteries within the hull the hatchcover must be removed first. Removal of the HF/LED whip antenna is not obligatory but will make handling the hatchcover more comfortable. Unscrew the wing nuts retaining the plywood boards. Now remove the foam cover on top of the batteries.

Before disconnecting the battery wiring, first mark the used batteries. Disconnect the battery wiring and take out the used batteries. It is recommended to replace one series at a time. Place the new batteries starting with battery A1 in clockwise direction and interconnect the batteries. Figure 20.3 show the battery numbering, wiring and grouping. Cells in one series are sequentially numbered 1, 2, 3, etc. and consecutive series are labelled A, B and C. Use connection wires of the indicated colour for each series. Connect the black leads of the buoy's main hatchcover cable to the positive pole of each series and the respectively coloured leads to the negative pole.

The connection wires are arranged in such a way that a marginal magnetic field is generated by the currents. This is to minimize the disturbance of the fluxgate compass. It is therefore essential that the connection wires are always routed exactly according to the wiring diagram. In general, the Waverider buoy will function and measure correctly even when it pitches and rolls either temporarily or permanently. However, for GPS reception and HF transmission it is beneficial to keep it upright as far as possible. With a weight of nearly 1.5 Kg per cell it is important to distribute the weight evenly. In particular for the eccentric mooring eye, the batteries should be distributed unevenly to balance the eccentric ballast chain weight. Maintain the distribution as outlined in Figure 20.3.

Please notice when servicing the batteries:
- Route battery wiring as shown in order to minimise current loops and associated effects on compass readings.
- Use Datawell non-magnetic batteries only.
- Do not use empty batteries as ballast in the buoy. Dispose the empty batteries immediately after use.

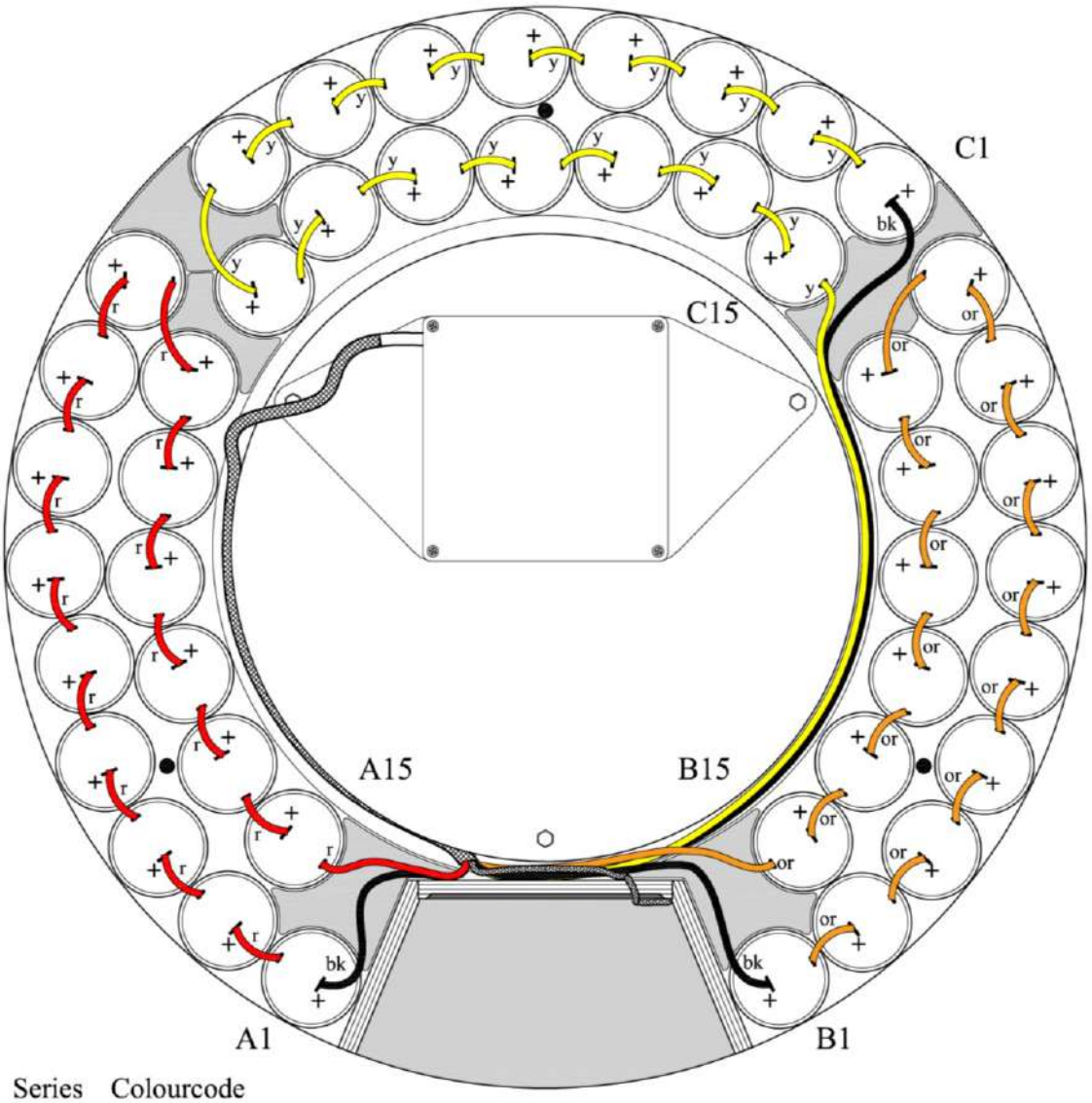

Series	Colourcode
A	r = red
B	or = orange
C	y = yellow
	bk = black

Figure 20.3 Battery numbering, wiring and grouping for a 0.9m diameter DWR4.

20.5 Battery replacement and wiring 0.7m DWR4

The batteries are organized in 1 series of 15 cells. Each battery has a capacity of 270 Wh, making a total capacity of 4050 Wh.

To access the batteries within the hull, the hatchcover must be removed first. Removal of the HF/LED whip antenna is not obligatory but will make handling the hatchcover more comfortable. The red battery wires are immediately visible and can be disconnect. After that, unscrew the 6 Delrin nuts retaining the 3 PVC boards. Before removing the batteries it is advised to mark the used batteries first.

Place the new batteries starting with battery A1 in clockwise direction and interconnect the batteries with original interconnection wires. Figure 20.4 shows the battery numbering and wiring. The cells are sequentially numbered 1, 2, 3, etc. Connect the black lead to the positive pole of the series and the red coloured lead to the negative pole.

The connection wires are arranged in such a way that a marginal magnetic field is generated by the currents. This is to minimize the disturbance of the fluxgate compass. It is therefore essential that the connection wires are always routed exactly according to the wiring diagram!

Once the batteries are replaced and connected, check the voltage of the serie on the hull control unit. Always close the hatchcover directly after battery replacement to prevent the taking up of moisture by the drying agent. Leave the main hatchcover connector disconnected if the buoy will be stored for a long time.

Please notice when servicing the batteries:
- Route battery wiring as shown in order to minimise current loops and associated effects on compass readings.
- Use Datawell non-magnetic batteries only.
- Do not use empty batteries as ballast in the buoy. Dispose the empty batteries immediately after use.

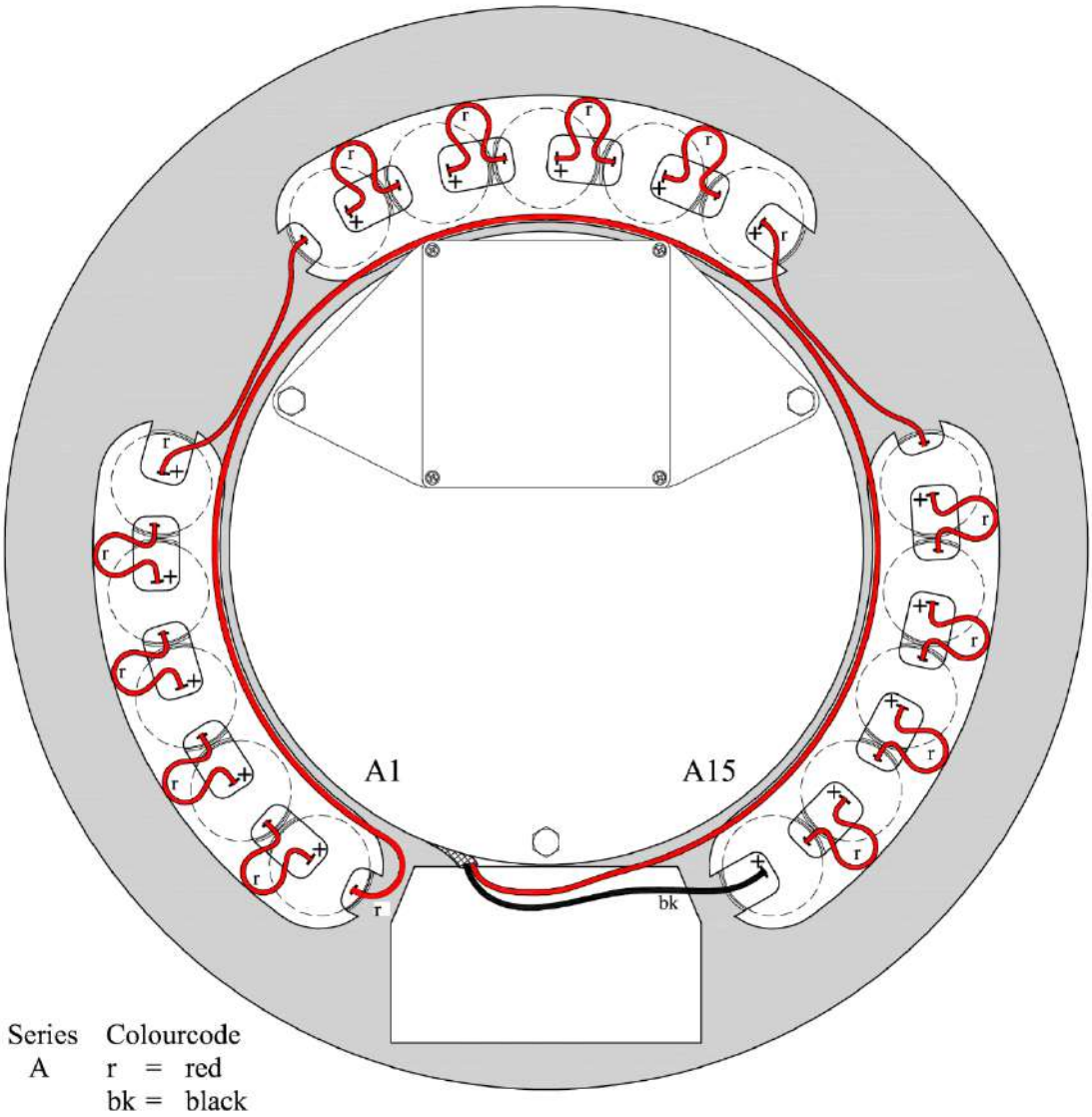

Figure 20.4 Battery numbering, wiring and grouping for a 0.7m diameter DWR4.

20.6 Power consumption and operational life

Power consumption is monitored by the buoy electronics and integrated over time to total energy consumed. This number is updated regularly over the HF link (system message). For service and testing purposes it can also be requested over the console with the `status` command. Dividing the energy consumed by time yields the average power consumption. During start-up power consumption may be increased but over time the value pertaining to your particular situation will become more accurate.

It is useful to know the remaining operational life, based on batteries only, i.e. without solar energy. Given the initial energy content of the batteries it is easy to calculate the energy left. Together with the average power consumption, the operational life can be estimated. Especially for fresh batteries this is a very accurate method.
Alternatively the remaining operational life is transmitted over the HF link and/or Iridium-SBD/Iridium-internet/GSM-internet/ARGOS communication link. The Battery Life Expectancy (BLE) is calculated from the remaining battery voltage. The BLE parameter is available in DMF message 0xFC3.

Table 20.2 Operational life based on Datacell batteries.

	DWR4/ACM 0.7m	DWR4/ACM 0.9m	DWR4 0.7m	DWR4 0.9m
Standard	11.5 months	23.5 months	14.5 months	43.5 months
GSM-internet only	15 months	30 months	25 months	58.5 months
GSM-internet/HF	10 months	20.5 months	13 months	37 months
Iridium-SBD only	16 months	32.5 months	21.5 months	65 months
Iridium-SBD/HF	10 months	20.5 months	12 months	37 months
Iridium-internet only	15 months*	30 months*	19.5 months*	58.5 months*
Iridium-internet/HF	10 months*	20.5 months*	11.5 months*	37 months*
Argos only	15 months	30 months	19.5 months	58.5 months
Argos/HF	10 months	20 months	11 months	36 months

**Indication based on typical use. Refer to chapter 15.1.6 for additional information.*

21 Solar power option

Optionally a solar system can be installed consisting of a solar panel and Boostcap capacitors for temporary solar energy storage. Together with the primary cells this makes the hybrid power system. This concept combines the reliability of primary cells with the availability of solar energy. The purpose of the hybrid power option is to reduce primary battery drainage.

21.1 Solar panel

The solar panel array converts the captured sunlight into electrical energy. Due to the low power consumption of the Waverider only a small solar panel is required. The array comprises a flat circle of 5 × 5 cm^2 solar cells on top of the stainless steel hatch-cover and is protected by a layer of polycarbonate. This rugged construction, fully integrated within the original spherical design of the hull, makes the panel extremely robust. Using only 16 of these small cells, the array generates a peak power of 15 times the continuous power consumption of a Directional Waverider (specified at air mass 0).

During even reasonably short deployments, surface floating buoys such as the Waverider cannot avoid suffering from marine growth, salt crystals, bird droppings and physical damage. Shadows cast by the antennas and fixings will also block the sun from individual the solar cells. To maintain optimum output, a novel cell configuration has been used.

Usually a solar panel array consists of many small solar cells connected in series. When a shadow blocks light to an individual cell or a cell is damaged, the chain is broken and the whole section stops producing energy, see Figure 21.1(a). The solar panel array on the Waverider overcomes this potential problem by linking the solar cells in a matrix, see Figure 21.1(b). When any one cell is blocked, current can still flow through the neighbouring cells in the matrix. In the unlikely case that a complete row in the matrix is blocked, no more current would flow but the probability of this happening is minimised by placing the individual cells of a row as remote as possible from each other.

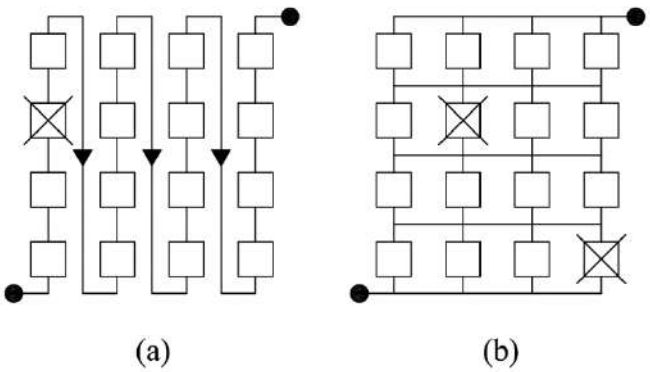

Figure 21.1 Solar panel array with cells linked (a) in series or (b) in a matrix.

21.2 Power storage pack

The pivotal innovative feature of the hybrid Waverider is the power storage pack. An array of specialised, ultra-high capacity capacitors (Boostcaps) is used to store surplus solar energy during the day. A normal power supply capacitor typically has a capacity of 0.0047F (Farad = unit in which capacity is expressed). Boostcaps are available in capacities up to 2600F (2.5 Volt). That is half a million times more than a normal power supply capacitor. Although Boostcaps do not come anywhere near the storage capacity of lead-acid batteries, the extremely efficient, low power consumption electronic design of the Waverider allows that the energy stored powers the Waverider through a considerable part of the night. The main operational advantage of the Boostcap is its robustness. It is a completely maintenance-free component and can be charged and discharged millions of times. This makes the Boostcap ideally suitable for applications at sea.

The power storage pack is installed in the hatchcover and consists of 11 Boostcap capacitors 2.7 Volt 300 F with a total capacity of 27 F and 28 Volt. For safety a 10 A fuse is incorporated inside the power storage pack.

21.3 Operation

Though the solar panel generates sufficient energy to power the buoy, the electronics does not start up without power of the primary cells, or on the external power supply connector(s) on the electronics unit.

The block of Boostcap capacitors are equipped with charging electronics. In order to prevent overloading of these capacitors, the excess energy is dissipated in the block. In order to prevent excess temperature built up in the power storage pack when dissipating excess energy, the current should be limited to 200 mA when charging the Boostcaps with an external power supply.

Marine growth on the solar panel can be removed by means of a regular pressure washer. This will not damage the panel neither by scratching the polycarbonate, nor by affecting the lute between the panel and the stainless steel. In case of severe damage the solar panel can be replaced, please contact our sales department.

The system message contains a total solar energy counter which is transmitted over the HF link. It allows you to monitor the performance of the solar cells and to make an estimate of the extra operational life of the buoy.

22 External switch

The DWR4 is equipped with an external switch. It is located underneath the nut on top of the hatchcover, see Figure 22.1. The nut may be unscrewed by hand or with help of a 19 mm wrench. Water tightness is provided by the rubber sealing ring. The labels "ON" and "OFF" indicate the correct position of the switch. When shipped from the Datawell factory the buoy is always switched off and the main cable connector not yet connected.

The buoy immediately responds to switching ON, for example by flashing the LED flasher. However, when switching OFF the buoy may delay shut-down up to 1 minute when the logger is busy. This allows the logger to complete a write-operation and avoids corrupting the flash card. No harm is done if the buoy is switched back on during this time. It is important to note that the most recent data will be lost. Allow one half hour to ensure all raw displacements are logged. In case of calculated spectra another half hour should be allowed. For more details refer to section 17 on the Data logger.

Figure 22.1 External power switch on the hatchcover, underneath the nut with sealing ring and ON and OFF labels on the sides.

23 LED flashlight

The Waverider is equipped with a flash light. The visibility range is 4 nautical miles under standard atmospheric conditions. The flash light consumes about 15 mW.
By default, the Waverider gives 5 flashes in 10 seconds and repeats this every 20 seconds. This standard pattern is shown in Figure 7. The colour (yellow) and flash pattern comply with the regulations for Ocean Data Acquisition Systems (ODAS) of the International Association of Lighthouse Authorities (IALA).

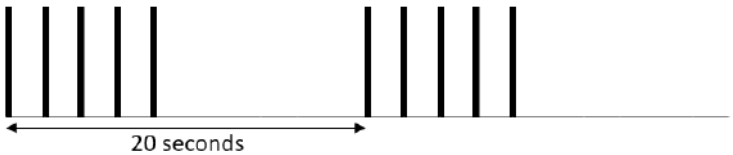

Figure 7 - Standard flash pattern. IALA ODAS Fl(5)20s

For better visibility, an alternative flash pattern is available. This pattern repeats every 15 seconds, as shown in *Figure **8***. The flash pattern can be selected via the console.

Figure 8 - Pattern with increased flash rate. IALA ODAS Fl(5)15s.

By default, the flash light is active during the night. The times of sunrise and sunset are calculated based on the location and time obtained from the GPS receiver. For better visibility, it's possible to have the flash light always active. This can be selected via the console.
To confirm the function of the flash light, the flash pattern is played after switching on the Waverider. It takes a few seconds before the flash pattern is started. The flash pattern will play for at least 5 minutes.

24 Painting, anti-fouling and corrosion protection

It is known that the corrosion risk of unprotected AISI316 stainless steel is to a certain degree unpredictable. Pitting is the predominant form of observed corrosion. However, sacrificial anodes on the stabilizing chain below the hull will mainly take care of corrosion of the AISI316 stainless steel hull. The use of sacrificial anodes is strongly recommended, even for painted buoys. Without protecting anodes, blistering paint or pinholes in the paint cause accelerated local pitting of the AISI316 stainless steel. Pitting has been found to be aggravated by the use of paints containing chlorinated hydrocarbons, acids or reducing agents.

24.1 Painting instructions

Paint may be applied on an AISI316 hull for protection against pitting, better visibility or because of navigation regulations. For painting we recommend the Brantho Korrux “3 in 1” (RAL 1021) paint system which has proven its quality in a maritime environment. In case of an ACM option, replace the three acoustic transducers with dummies according to the procedure explained in chapter 28.9.

After removing the fender, replacing the three acoustic transducers, degreasing the hull, making it dust free and covering flange, handles and mooring eye, Brantho Korrux can easily be applied in 3 layers without sanding the previous layer. Each layer needs to dry for 48 hours before the next layer can be applied. After the third finishing layer the paint must be allowed to dry for at least 2 weeks before mounting the fender. Brantho Korrux is available in cans of 750 ml

Necessary parts:
- One can of 750 ml yellow paint, sufficient for a 90 cm diameter Waverider
- One tray plus three single purpose sheets
- Three rollers plus one handle for the rollers
- Three paint brushes
- Tape
- Stirrer
- Sheet: EEC-Safety Data Sheet for “Non-hazardous Products”
- Sheet: Technical Information and Application-Instructions For Brantho-Korrux “3 in 1”

The Brantho Korrux paint system can be applied to the Waverider in the following way:
- (Previously used buoy)
- Remove stickers / fender
- Remove dirt
- Remove paint not properly attached anymore to the buoy
- Degrease the buoy and make surface dust free
- Cover flange, handles and mooring eye (see images on next page)
- Apply 3 layers of paint. Allow paint to dry for 48 hours before applying the next layer. There is no need for sanding the previous layer.
- Allow paint to dry for 2 weeks after applying the last layer before mounting the fender.

We recommend to cover the mooring eye since the sacrificial anodes which protect the buoy from corrosion are mounted on the chain and should have galvanic coupling with the buoy

Advantage of this paint over traditional epoxy paint:

- One compound paint, no mixing
- 3 in 1 system
- Relatively environmental friendly
- This paint can be applied over most other paints
- This paint can be applied over an old layer without the need for removing or an extra layer of primer.

Disadvantage of this paint are:

- Relatively long drying time
- Bad smell

24.2 Anti-fouling

Depending on local conditions such as water temperature and water quality, anti-fouling paint may be necessary for AISI316 buoy hulls. Severe fouling may affect the mooring performance due to increased drag.

Experience has shown that all kinds of fouling (Barnacles, mussels, worms, several kinds of seaweed and algae) can occur on the buoy's hull and that these fouling types can reach substantial amounts. The surface of the three transducers of the Acoustic Current Meter will eventually be affected by fouling as well.

Especially the calcified forms of fouling will eventually affect the function of the ACM. The amplitudes of the transmitted and received sound echoes will reduce substantially and will eventually end in noise. The fouling if increased enough in size and density, will form a sound barrier on the surface of the transducer. Not only the amplitude of the sound will be reduced, the sound could also scatter in space.

Larger and harder kinds of fouling will eventually reduce the functionality of the transducers and could, in time, stop the functionality of the transducers entirely. When that happens, it is time to remove the fouling. Depending on time of year, geographical location and temperature, the interval of cleaning can vary from a few months to about a year.

It is possible however to postpone the need of cleaning the transducers. Anti-fouling paint has the ability to protect the surface of the transducers against fouling for some time. Although protection is not endless, it can still last for a couple of months to about one year.
Tests performed by Datawell have shown that anti-fouling paint, applied to the surface of the ACM transducers, can delay the fouling process on these transducers by several months. The transducer surface which is mainly designed for optimum acoustic properties, water tightness and durability is suitable for the anti-fouling paint as well.

The anti-fouling paint tested by Datawell was a so-called hard antifouling paint containing copper and forms a hard and porous layer of paint.

The layer of paint from the used anti-fouling paint is hard and porous. The biocides present in the anti-fouling, slowly dissolve and prevent fouling. Biocides are active substances that chemically or biologically kill or repel organisms. At the end of a season, a hard residue of different kinds of epoxy, waxes, solvents and pigments remain, which no longer acts as an active protector against fouling. Datawell strongly encourages the use of these types of anti-fouling paint.

Contrary to the hard anti-fouling paints, soft, self-polishing anti-fouling paints do not leave any residue, but need a considerable current to function properly. When used on buoys, the question arises whether the current on that location is sufficient. Experiences from Directional Waverider users with these paints could be described as disappointing. Datawell strongly discourages the use of self-polishing anti-fouling paint!

The Datawell test contained both a single applied layer of 25um as a double applied layer of 60um thickness, equally applied on the transducers. The transducers were degreased and cleaned with alcohol before the anti-fouling paint was applied. No primer was used. The sound attenuation because of these thin layers of anti-fouling paint is small. Tests show that this is about 1-2 dB, which is very small compared to the attenuation a thick layer of fouling can cause. The 1-2 dB decrease does not seem to be a problem for the proper functioning of the ACM.

It is up to the users of the buoys whether or not they use anti-fouling paint. But if they do, Datawell advises to also apply a layer of anti-fouling paint to the transducers. When applying this paint, always do so equally and not too thick. A layer of 20-60 micron is recommended.

When the fouling and remnants of the anti-fouling paint are removed, it is essential that no sharp objects are used that can damage the surface of the transducers. A wooden or plastic spatula has proven to be sufficient to remove the paint without damaging the surface of the transducers.

24.3 Anodes

Corrosion risks of the stainless steel AISI316 buoy hull can be prevented by applying sacrificial aluminium anodes. These anodes can be fitted to the chain below the buoy (from the second link from the buoy). In the water an adequate galvanic current path is formed between the anodes and the hull through the chain and back through the sea water. The layout of the protective anodes is given in Figure 24.1 At least one free link should be left between the clamps and the buoy. To prevent the nuts from unscrewing Nyloc nuts should be used. Nyloc nuts should be used only once. The anodes have an estimated life of three years.

Sacrificial anodes are not required for Cunifer10 hulls.

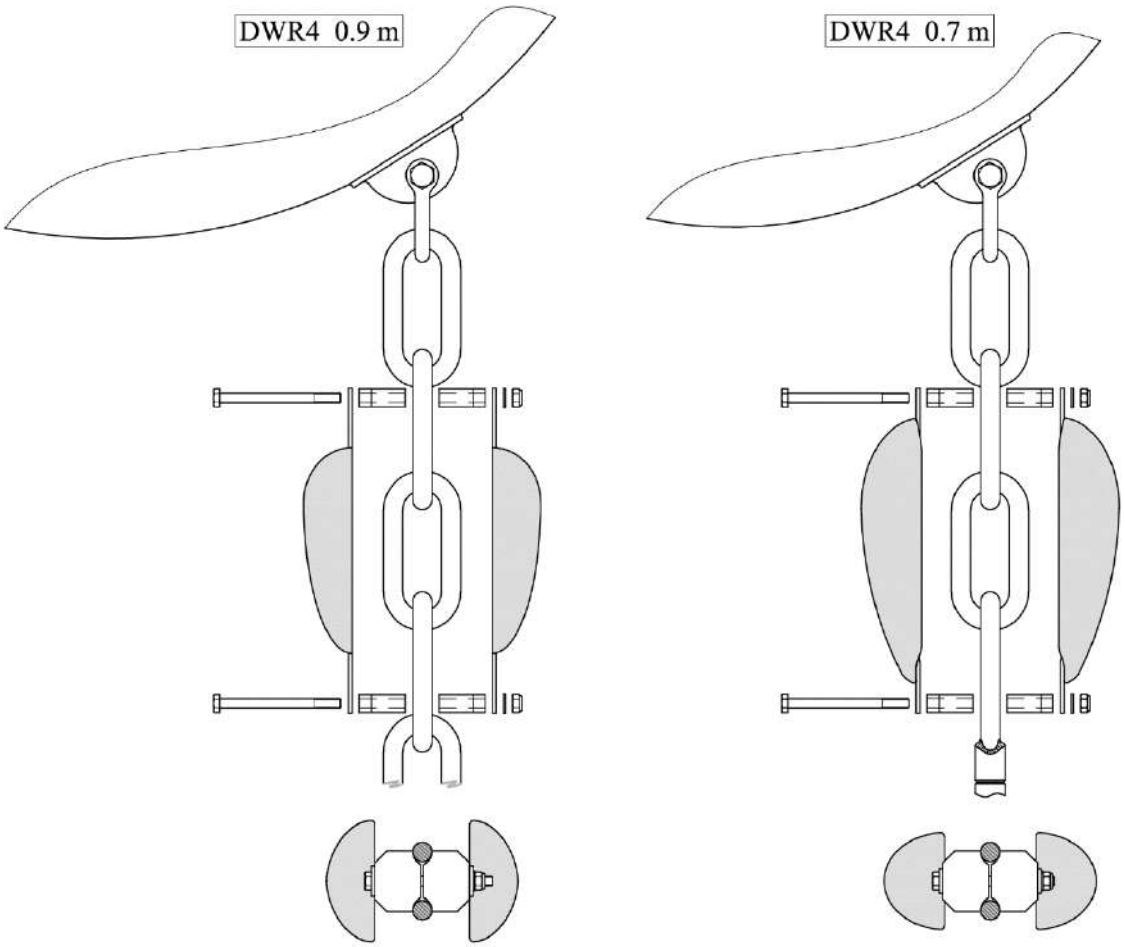

Figure 24.1 Mounting illustration of aluminium sacrificial anodes.

25 Mooring

The correct mooring of a wave buoy is essential to measuring wave parameters according to specifications. The design of an appropriate mooring requires knowledge of the current speed and profile, the depth, tides, wave height and sometimes the seabed structure. To help our customers in finding a good mooring solution, Datawell has developed a standard mooring lay-out that applies to a wide range of situations. The pivoting component is a rubber cord that provides the flexibility to ride waves up to 40 m.

First, a general remark on mooring materials is made. After that, all parts of the mooring are described in detail from the bottom up. Finally, attention is given to the complete mooring lay out and the effect of depths and currents.

25.1 Stainless steel

In a marine environment corrosion is a problem and stainless steel parts are crucial for the longevity of the mooring and buoy. All metal parts supplied by Datawell, such as the chain, swivel and metal parts of the terminals, are of AISI316 stainless steel. Every production run is sampled for all separate elements and tested to ensure that the composition lies within AISI316 specifications.

The only exceptions to stainless steel are the aluminium sinker, the anchor weight and the attached shackle which is made of plain steel.

25.2 Anchor weight

Forces on a 0.9m diameter buoy under normal conditions do not exceed 100 Kg. Therefore an anchor weight of 500 Kg suffices. Datawell advises a steel chain tied together. In contrast to concrete, steel chain retains most of its weight under water and can usually be retrieved more easily.

25.3 Shackles and split pins

Figure 25.1 shows a shackle and split pin. **It is important to notice that Datawell uses a shackle bolt which is still free to rotate after the nut is fastened**. This prevents wear of the mooring eye. After tightly fastening the nut on the shackle bolt it must be secured against unscrewing by applying a split pin. Push both legs of the pin through the hole in the bolt and bend them back, one leg round each side of the bolt. Bring a suitable pair of pliers and a few spare split pins (included). All shackles and split pins are AISI316 stainless steel, except the one connecting the anchor weight.

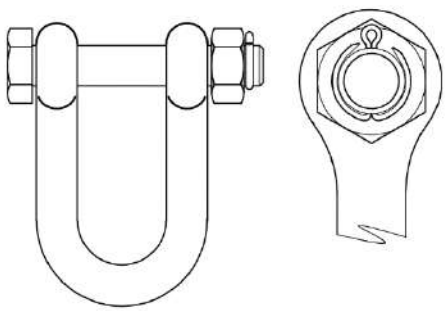

Figure 25.1 Shackle with split pin.

25.4 Polypropylene (PP) rope

Datawell supplies synthetic fibre 12 mm multiplaited polypropylene rope, in short polypropylene (PP) rope. This PP-rope is torsion free and has a breaking strength of 2000 Kg. It is available in standard lengths of 200m, 500m and 1000m or custom-made with thimbles.

Coils of rope should be unrolled. Pull in the direction of the tangent rope (tangentially). Never pull a length of rope from the coil in the direction of the axis of rotation (axially). Doing so will result a line impossible to handle due to the torsion built up.

Polypropylene rope is floating, however, over time sediments could be trapped between the fibres and the heavier rope may finally sink.

PP-rope can be spliced on thimbles, or mounted on a special PP-terminal. Figure 25.2 depicts the PP-terminal and illustrates how to mount the PP-rope. When mounting, the metal bracket can be linked directly with e.g. a rubber cord terminal. This eliminates one shackle.

Also available are custom made PP-ropes including in-line float (3 Kg) and terminated with AISI316 thimbles and 12 mm shackles.

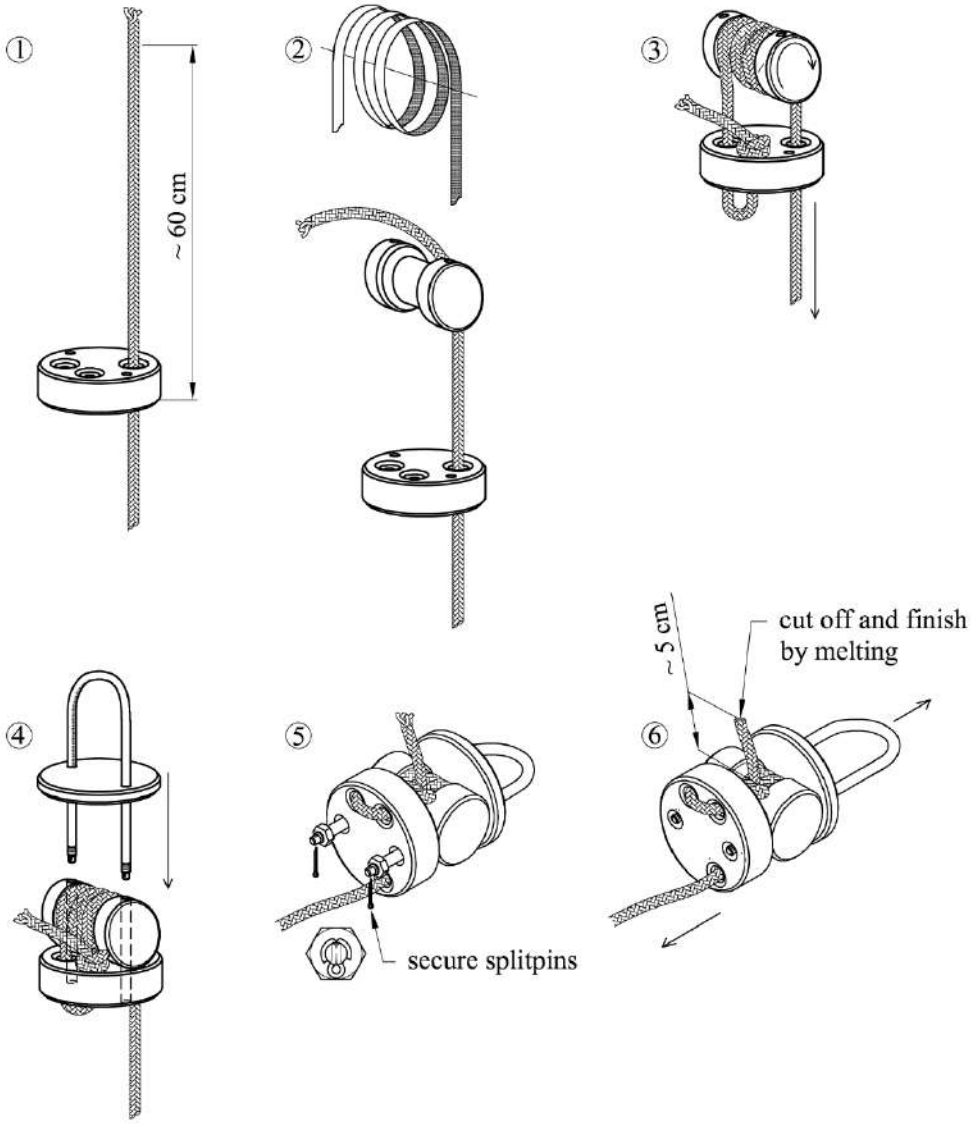

Figure 25.2 Polypropylene (PP) terminal and mounting instructions.

25.5 Sinker

For larger depths, Datawell provides in-line sinkers which keep the polypropylene line from the sea surface. The sinker consists of two identical and complementary aluminium parts which can be clamped to the 12 mm multiplaited polypropylene rope supplied by Datawell. Applying or removing the sinkers from the rope can be done without special equipment or small parts. See Figure 25.3

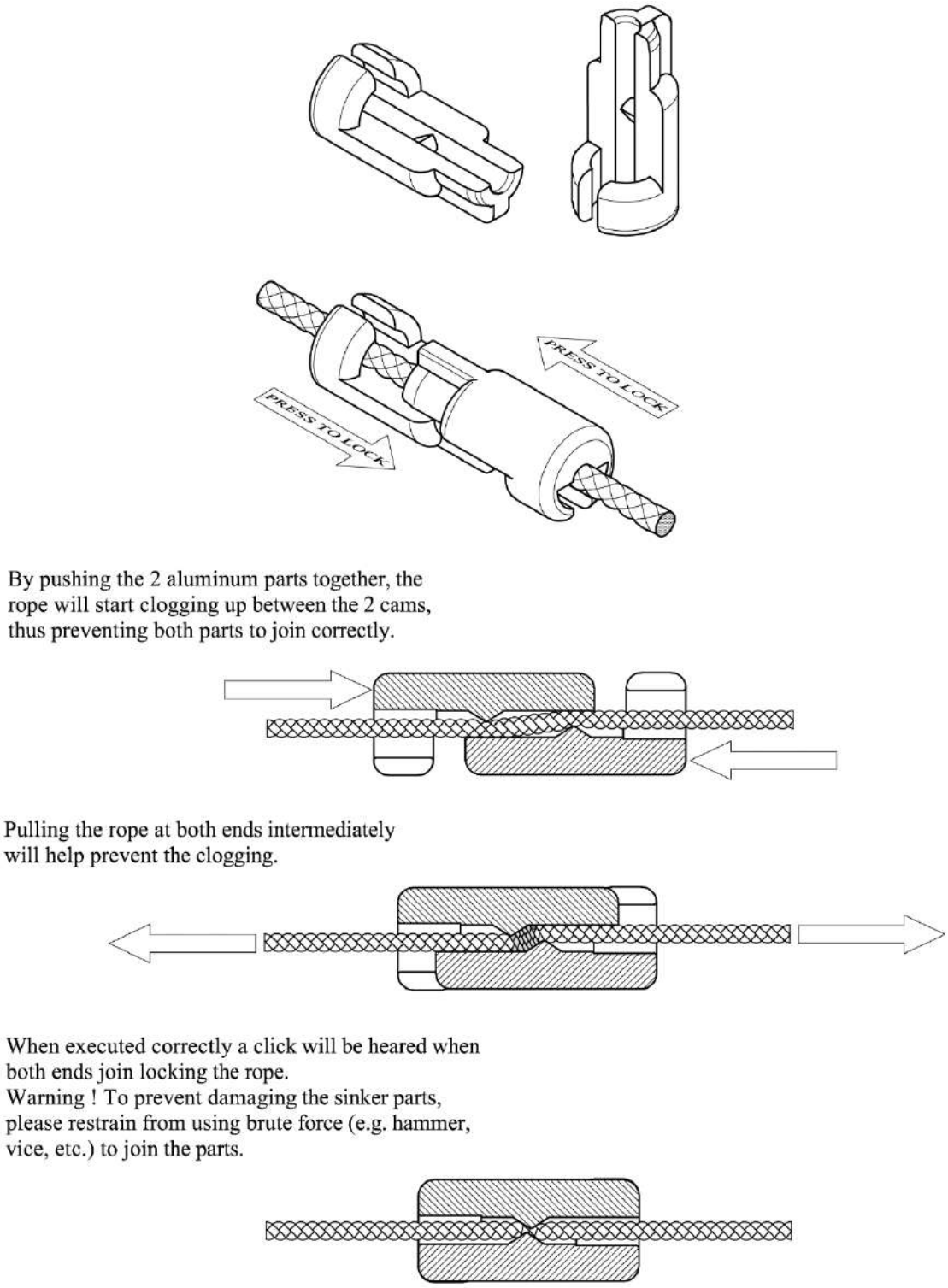

Figure 25.3 Aluminium sinker consisting of two identical and complementary parts.

25.6 Floats

The purpose of floats is to keep the mooring free from the seabed. Datawell provides two types of floats, a 3 Kg and a 10 Kg float. The 0.2 m diameter, 3 Kg buoyancy float can be tied with an 8 mm nylon rope to the polypropylene rope by two times a clove hitch, see Figure 25.4 This way of mounting is called in-line float and it leaves the main rope intact. In this way the strength of the polypropylene rope is not decreased. Its main function is to lift the lower end of the mooring line from the seabed. The working depth of the float is 1.4 Km.

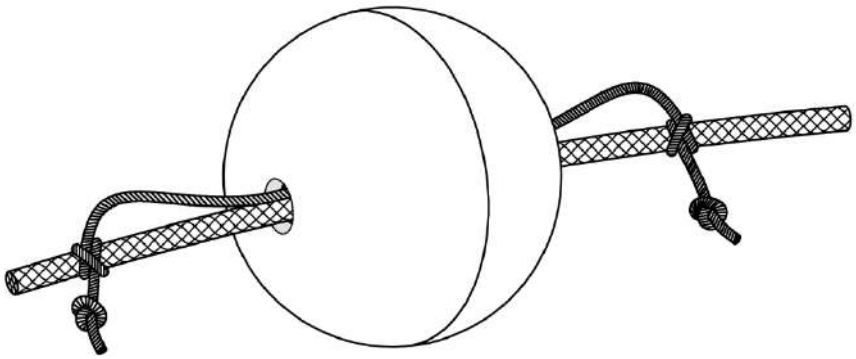

Figure 25.4 In-line float (0.2 m diameter, 3 Kg buoyancy) and mounting instruction.

Another float supplied by Datawell has a 0.3 m diameter and provides 10 Kg buoyancy. The float can be attached to the rubber cord terminals when it is necessary to keep the rubber cord away from the seabed. The working depth is 1.4 Km too.

25.7 Rubber cords

As mentioned, the rubber cords are essential for high quality wave measurements. They allow the buoy to follow the wave motion, thus guaranteeing that the measured motion of the buoy is indeed the same as the motion of the water due to waves.

With a single point vertical mooring using 15 m of rubber cord the buoy has sufficient vertical freedom to guarantee good wave following properties even for large waves. The high flexibility of 30 m of rubber cord allows the Directional Waverider to follow wave direction up to the specified frequency. Current velocities up to 3 m/s (6 knots) can be accepted.

Natural rubber is chosen for its high tear strength and low tear propagation specifications. This reduces chances on mooring failure in operation due to, initially, minor cuts in the rubber cord.

The rubber cords are checked for hardness degree, tear strength and tensile strength. The rubber cord is rejected when the strength falls below 50 Kg/cm^2 (Delft method). After the rubber cord terminals have been fitted, the cord is stretched to about 3.5 times its original length and kept under tension for 24 hours. Any holes or cuts, if present, will thus be enlarged and found at visual inspection afterwards.

In case of strong breaking waves of the plunging type, the buoy has to be pulled through a wall of water running at considerable velocity. In that case the induced forces may incidentally exceed the breaking strength of the rubber cord. In this situation, the use of a polypropylene safety line parallel to the rubber cord is advised: limiting the maximum elongation of the rubber cord to 4 times the unstretched length, it helps the mooring to survive the peaks of the water forces.
Standard rubber cords are 30 m, but can be supplied in any length up to 30 m. Their diameter is 35 mm for 0.9m diameter buoys and 27mm for 0.7m diameter buoys.

25.8 Solution for twisted mooring line

The standard Waverider mooring can be applied to almost all situations. However, over the years we have heard of experiences from customers where the mooring line is twisted and tangled up. This phenomenon is usually caused by the 10Kg float that twists around the rubber cord, limiting the stretch of the rubber cord, and afflicting damage to the rubber cord.
In our experience, this situation is most present in locations where the buoy is submitted to a lot of tidal movements in shallow waters.

Years of research has resulted in a solution to reduce the twisting of the rubber and float. The simplest solution is to leave out the float. Especially in locations with a sandy seabed, we recommend not to use the float.

We have also designed a special rubber cord terminal with an integrated swivel. This swivel will help reduce rotation of the rubber cord.
Figure 25.5 shows the rubber cord with the standard terminal on one end and the swivel terminal on the other end.

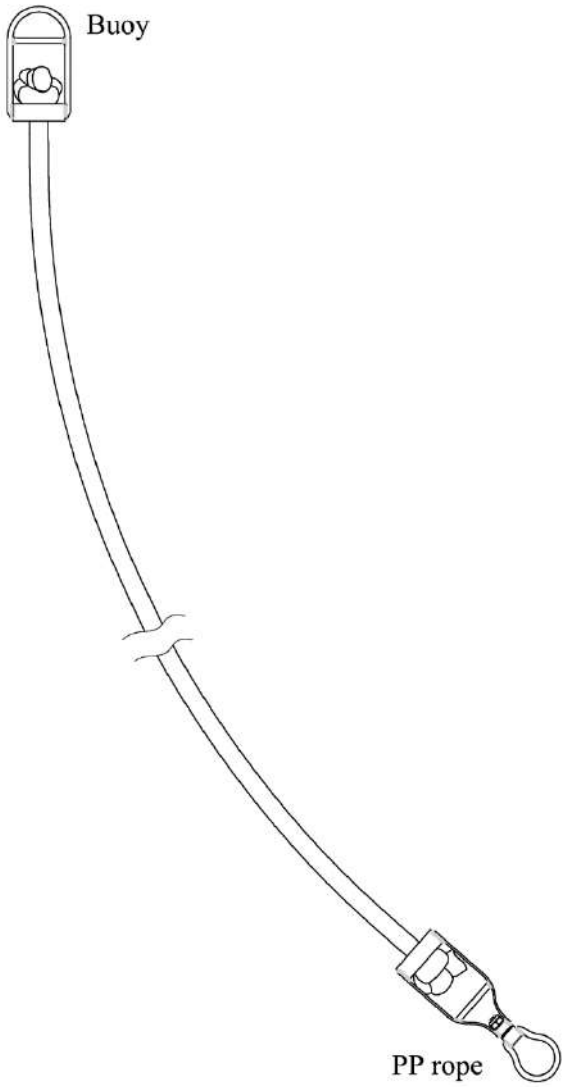

Figure 25.5 the rubber cord with swivel terminal.

25.9 Chain coupling and swivel

The DWR4 buoys are fitted with a chain coupling attached to the mooring eye. This provides stability when only a small vertical mooring force is present, e.g. for a free floating buoy or a buoy moored in shallow water. Without chain coupling and when broken adrift, large pitch and roll amplitudes could cause irreparable damage to the stabilized platform.

The chain coupling incorporates a swivel at the lower chain end. It prevents the buoy from spinning after mooring line wind-up by tidal motion.The thickness of the chain is 16 mm. The upper chain link is connected to the mooring eye and the swivel is connected to the rubber cord terminal. On both ends 12 mm shackles are used with M12 bolt and nut, blocked by a 2x32 mm split pin. Chain coupling, swivel, shackle, bolt, nut and split pin are all made of stainless steel AISI316.

Figure 25.6 shows how to assemble all individual parts of the chain coupling.

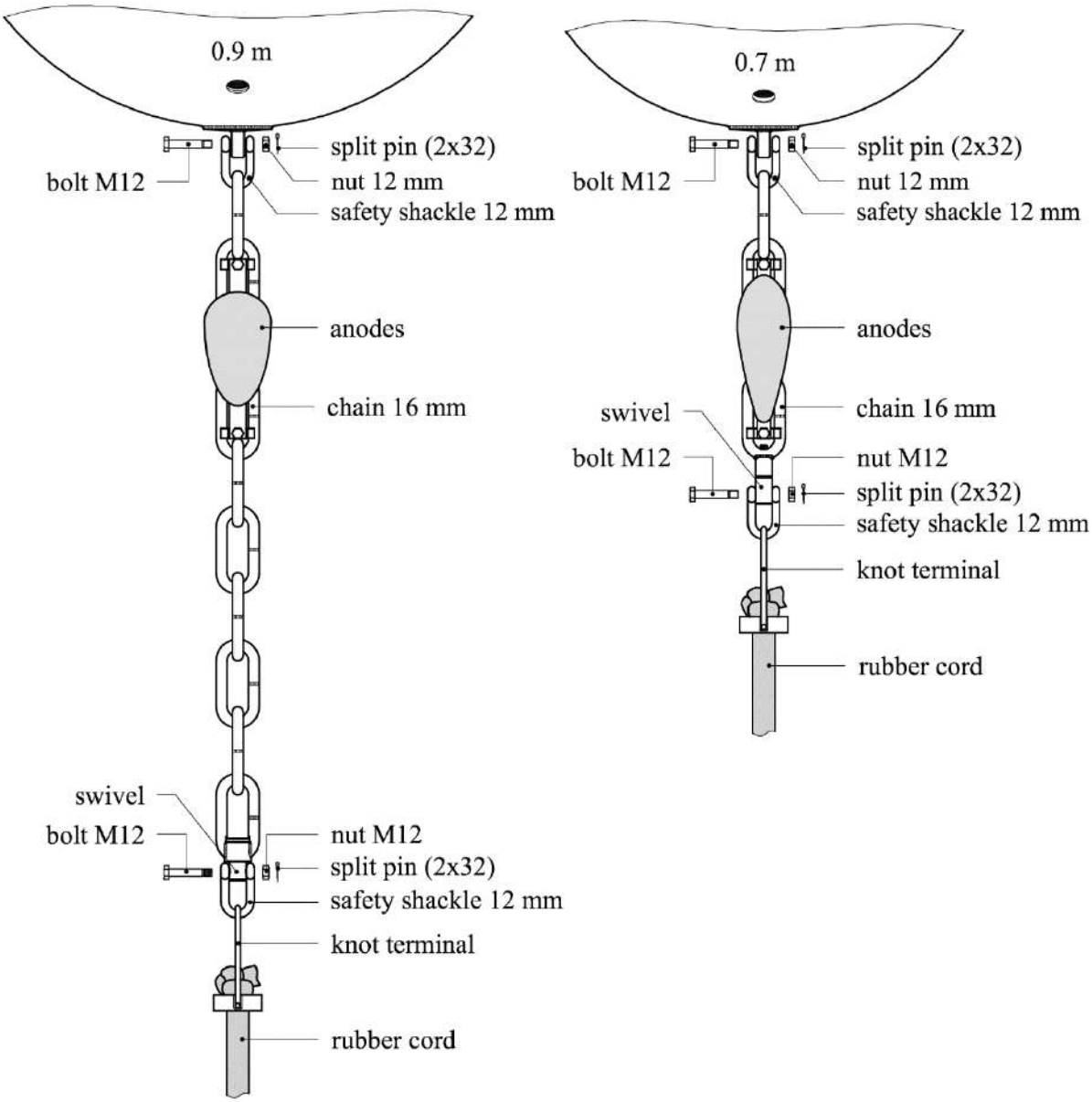

Figure 25.6 Mounting illustrations of the chain coupling for an AISI316 hull.

25.10 Standard mooring layout

Mooring packages are available for each range of depth. All components are of high quality to prevent corrosion, and kinking and twisting of the mooring line. Shackles and terminals for easy mounting are included.

The main principles underlying the standard mooring 'recipe' are:

(1) the configuration must be neutrally buoyant
(2) the mooring line length is twice the water depth
(3) the polypropylene line length equals two times the water depth (D) minus the rubber cord length with a minimum of the water depth plus 5 meters for retrieving purposes
(4) there is a clearance at both sea surface and seabed to avoid interference with ships and wrecks
(5) the ropes are torsion-free to avoid kinking and twisting of the rope and spinning of the buoy

The rubber cord has a standard length of 30 m for the DWR4. The length of the polypropylene line depends on the low tide depth of the water, henceforth indicated by *D*. A sketch of the mooring is found in Figures 25.7-11. See also Table 25.1.

To provide sufficient flexibility to ride the waves, 0.9m diameter buoys must be fitted with 35 mm rubber cords and the 0.7m diameter buoys with 27 mm rubber cords.

Sand and mud can become trapped in the open structure of the polypropylene rope. In time the rope can become sinking instead of floating. To avoid entanglement of the rope a small in-line float (buoyancy 3 Kg) in the PP-rope, a few metres above the seabed, is advised.

Table 25.1. Number of sinkers and floats for various water depths, for a directional Waverider.

DIRECTIONAL WAVERIDER	
8 m < D < 17 m	2 floats 1 sinker
17 m < D < 34 m	1 float 1 sinker
34 m < D < 60 m	
60 m < D < 85 m	1 sinker
85 m < D < 150 m	2 sinkers
150 m < D < 200 m	3 sinkers

Shallow water

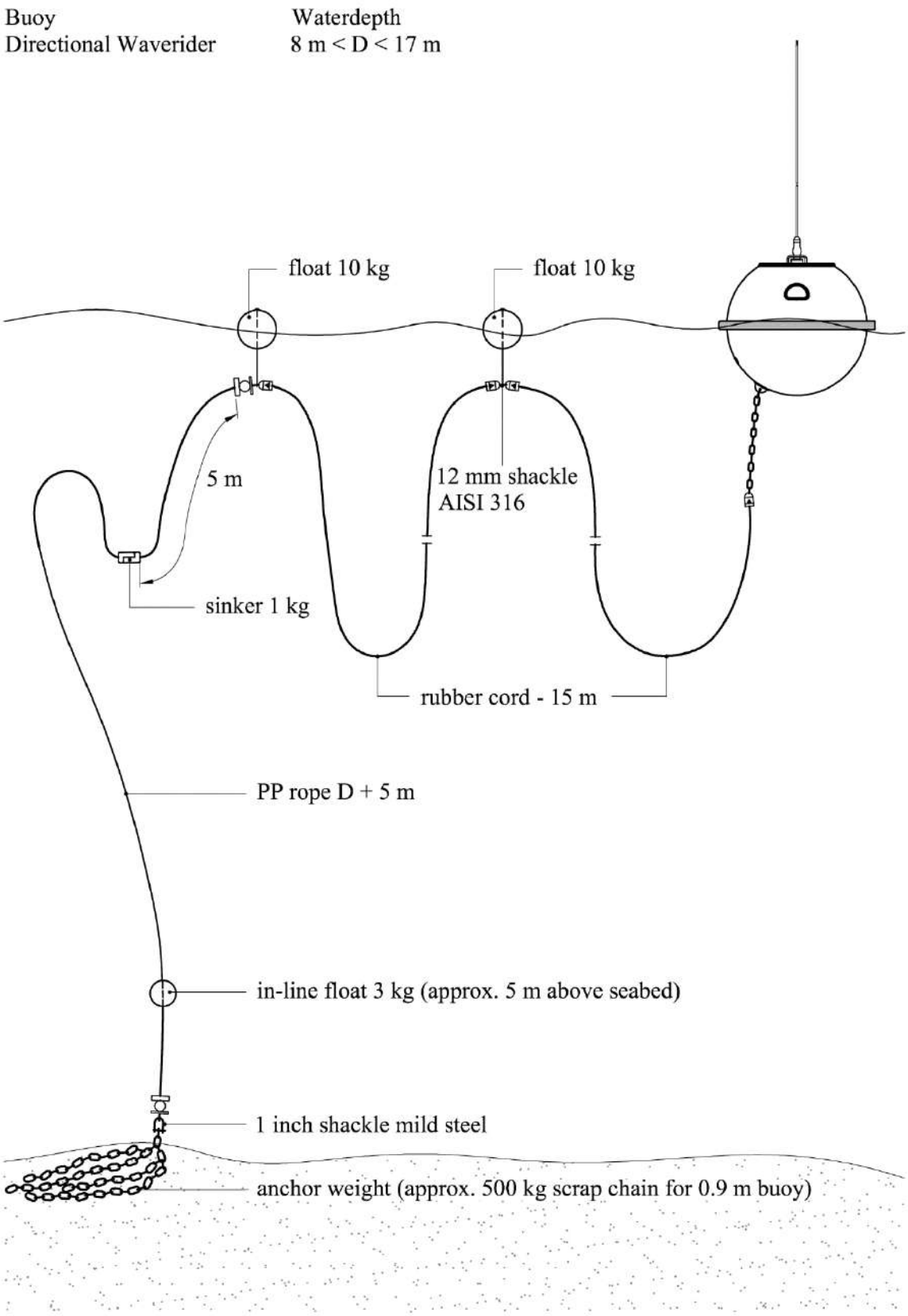

Figure 25.7 Mooring line layout for the DWR4 for a depth 8 m < D < 17 m.

Shallow water

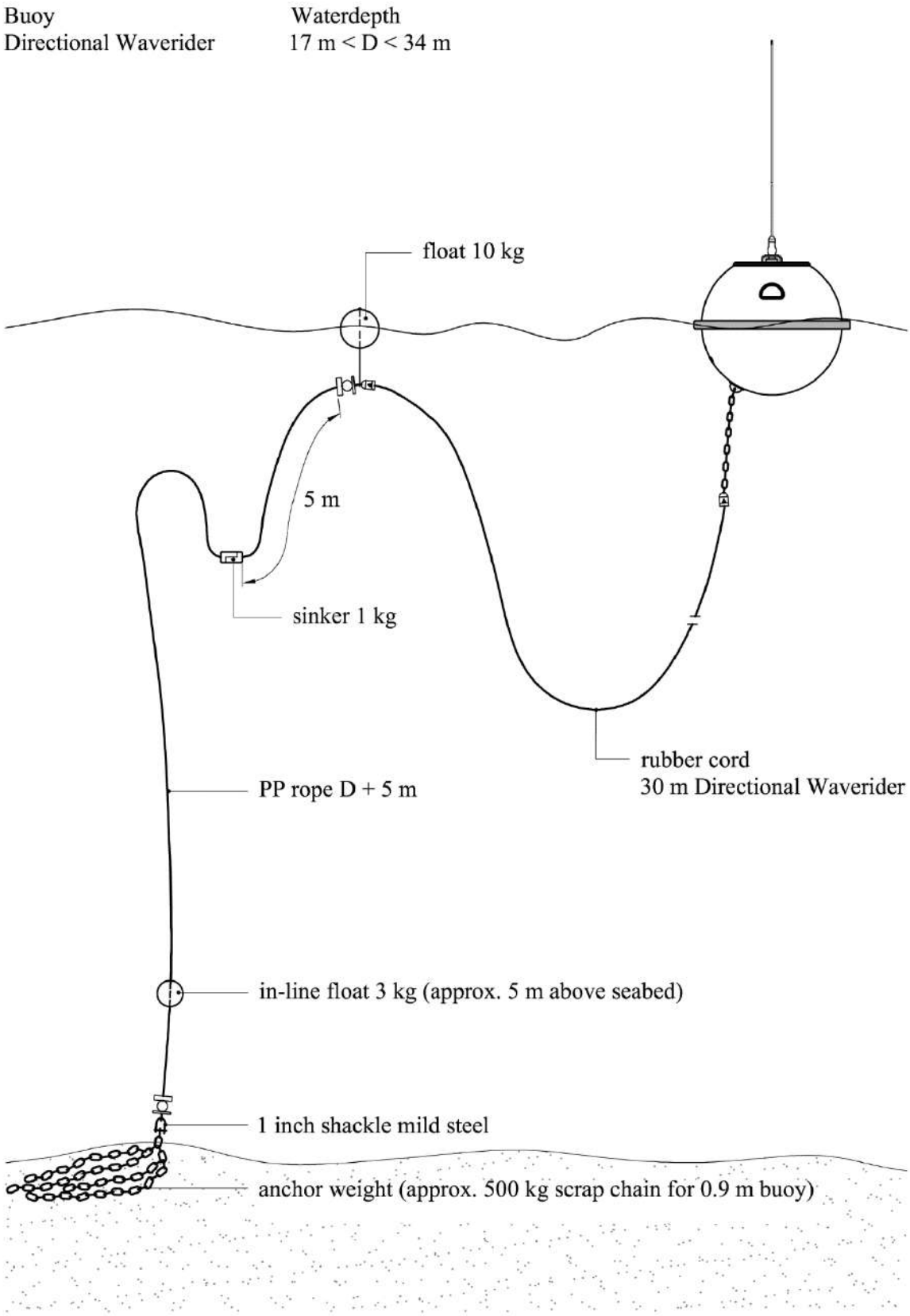

Figure 25.8 Mooring line layout for the DWR4 for a depth 17 m < D < 34 m.

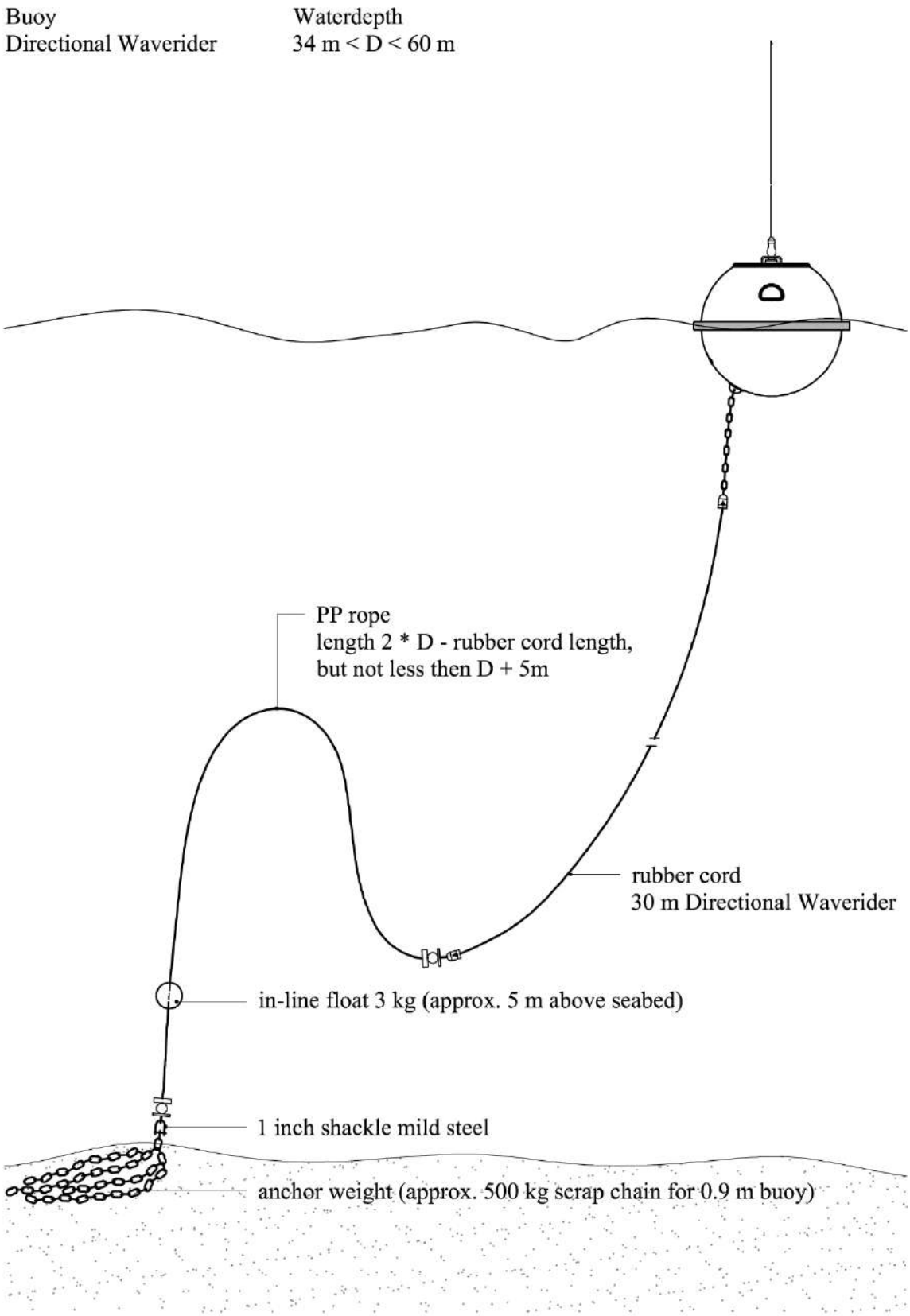

Figure 25.9 Mooring line layout for the DWR4 for a depth 34 m < D < 60 m.

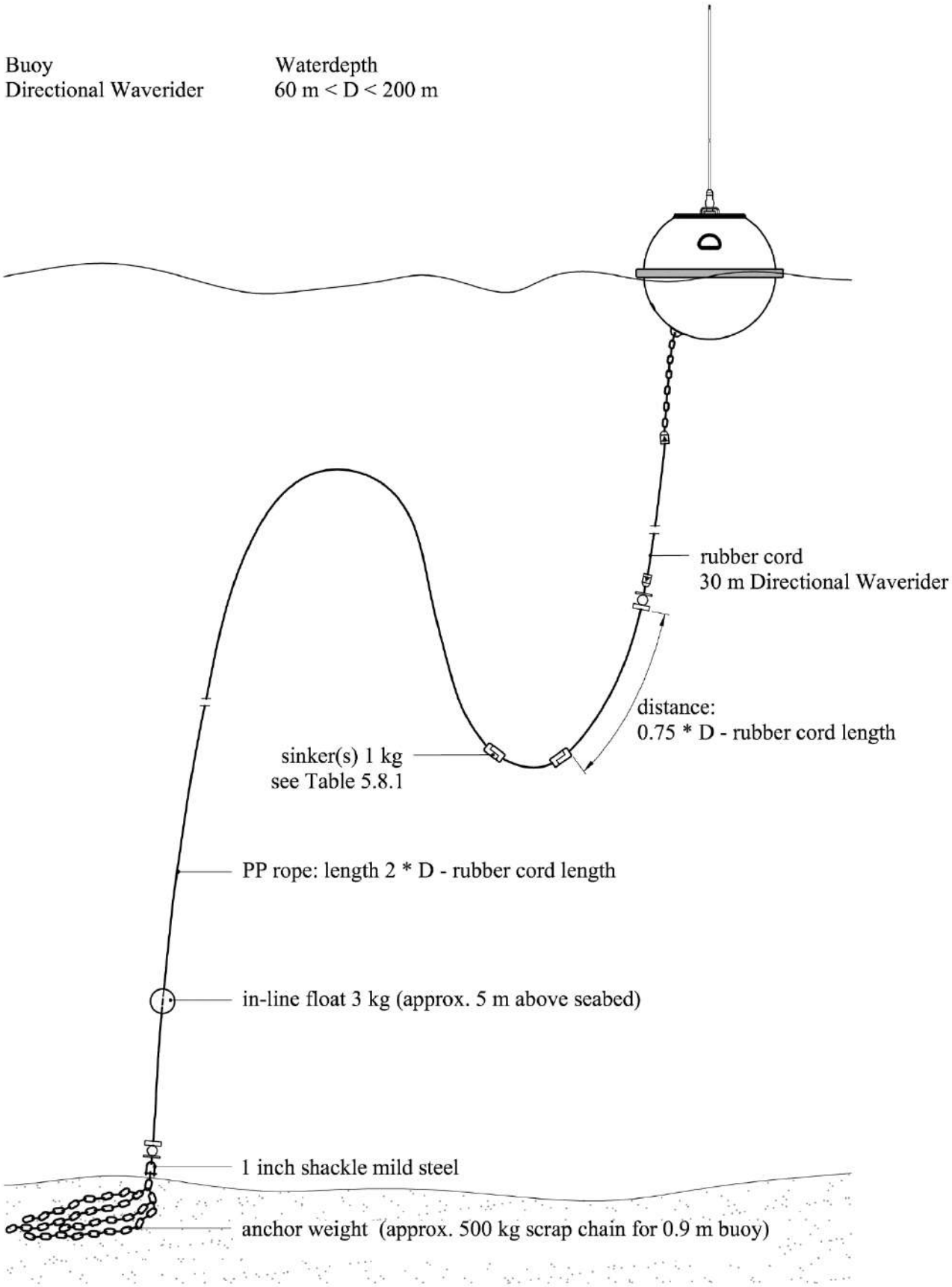

Figure 25.10 Mooring line layout for the DWR4 for a depth 60 m < D < 200 m.

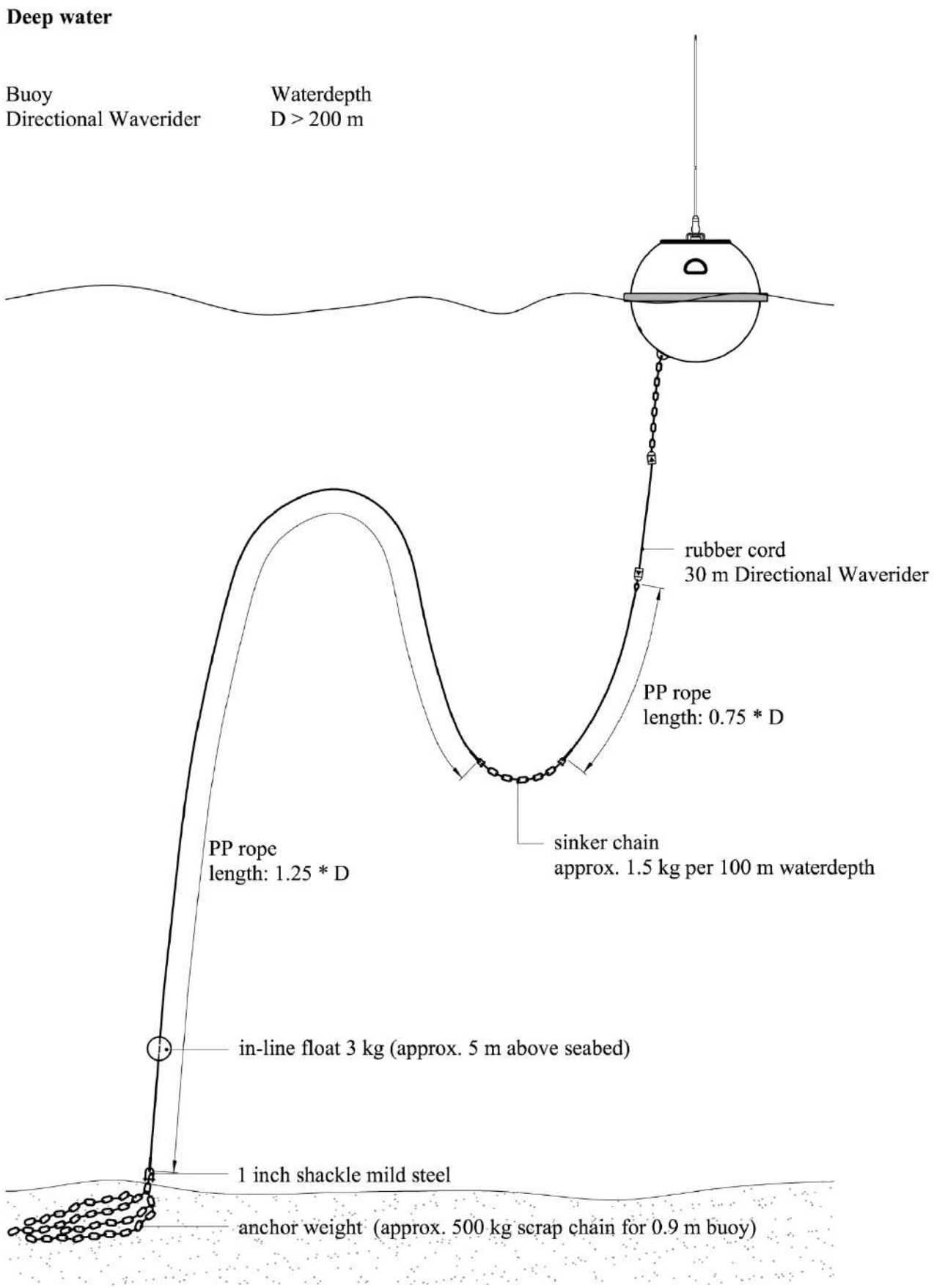

Figure 25.11 Mooring line layout for the DWR4 for D > 200 m.

25.11 Applicability of the standard mooring layout

Table 25.2 below, indicates up to what depth the standard mooring applies given the local current speed. The current is assumed to extend over the full depth.

Table 25.2. Applicability of the standard mooring layout.

Current speed (m/s)	Max. depth 0.7m buoy	Max. depth 0.9m buoy
0.5	1050	2000
1.0	180	330
1.5	61	120
2.0	28	62
2.5	19	42
3.0	15	34

Contact Datawell for a fine-tuned mooring advice, if your location is not covered by the table.

Examples:

- If e.g. at the intended location the current speed is 1.5 m/s (3 knots) and the depth is 100 m, then the standard mooring applies for a 0.9m buoy.
- Should the depth be 150 m, then the mooring must be reconsidered. If the current is indeed over the full depth, the remedy is a subsurface float (contact Datawell Sales for a customized mooring design).
- Idem 150 m depth, in case the current is only over the upper half of the depth, the standard mooring still applies.

25.12 Custom-made mooring

On your request a custom-made mooring with appropriate lengths and all terminals attached will be shipped to you. You only have to provide for an anchor weight. Contact our sales department.

26 Deployment and recovery

Depending on the vessel available, local conditions and experience every customer will develop its own procedures. The procedures suggested here are based on our own experience over the years. Most important they show how we avoid risks and problems that your procedures should take into account as well.

26.1 Preparation

After you have set up and checked the equipment on land, it's time to deploy the buoy. A safe and successful deployment requires the right equipment and a well-thought out procedure. Bring a few ropes and a knife, they always come in handy. Also bring a used car-tire to support the buoy while on deck. Still the buoy must be roped to the railing. If you have a Buoy Finder you can use it to monitor the buoys outputs. Alternatively you can contact your receiving station during deployment. The best time to do this is after the buoy is deployed on its location and before the vessel will return to port. To handle the weight of the anchor, either a vessel with a hoisting crane or U-frame or a vessel with a removable railing should be chartered. For comfortable deployment a day with small waves is best waited for.

To avoid entangling the mooring line, lay it out on the deck of the vessel as a stack of 'eights'. To keep everything in place you may tie a rope around the waist, leaving one loop of the 'eight' on either side, and two ropes through the two loops itself. If you are taking off rope or wire from a reel, do not slide off loops on the side but unroll the reel. Sliding off line will build up so much torsion that handling will be nearly impossible. In practice, these actions will be taken when the vessel has already left port. To avoid problems at sea inspect all mooring components beforehand.

26.2 Buoy deployment

The procedure below, see Figure 26.1, is suggested for a small vessel with a hoisting crane or removable railing in the front. Users should adapt the procedure to size and outfit of their vessel and according to their own experience. Before the actual deployment, lay out the mooring line on deck and connect it to anchor weight and buoy using the shackles and split pins. Never stand inside the loops of the mooring line or between the mooring line and the vessel railing. Hoist the anchor weight on the side of the vessel and hang it overboard on a rope or push it towards the removable railing. Release the anchor weight from the hoisting crane and leave it hanging overboard. Once you are at the intended location steer the vessel in reverse backing up slowly against the current. This manoeuvre will keep the mooring line out of the screw propeller. Deploy the buoy by hoisting it overboard. If you hoist the buoy use an extra piece of rope to keep the crane hook at a distance from the antennas and sensors mounted. To release, cut the rope. Feed the mooring line loop by loop while the buoy drifts away from the vessel and finally cut the rope that carries the anchor weight or push the anchor weight overboard. Continue to back up until the vessel has gained enough distance to steer clear of the buoy and mooring line. Though deploying the buoy by attaching a rope to the buoy handles is still the most recommended procedure, a correctly mounted triangle can also be used to hoist the buoy.

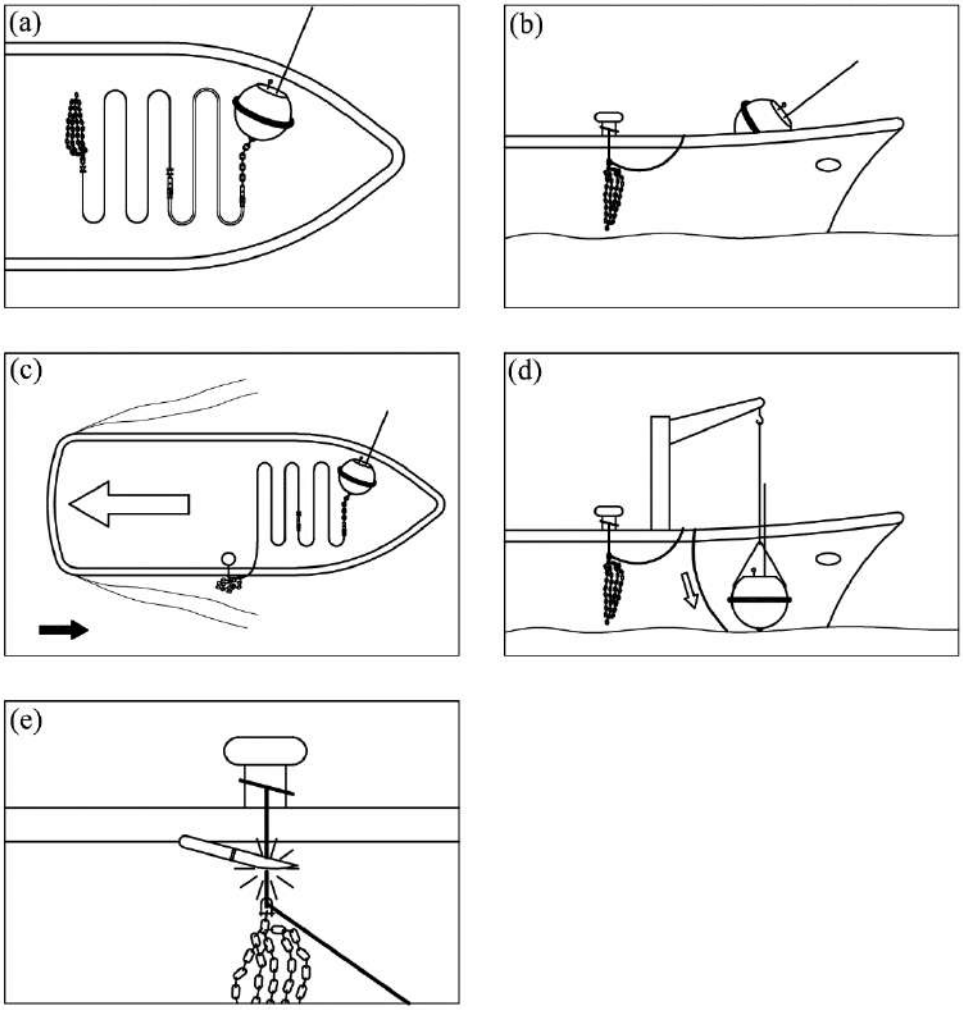

Figure 26.1 Deployment procedure.

26.3 Buoy recovery

Snapping rubber cords are dangerous. Do not lift the mooring by the rubber cords. Do not moor the vessel to the rubber cords.

There are several procedures for recovering a Waverider buoy. The most suitable one on any particular occasion will depend on the location, the weather, the sea state, the vessel being used, the availability of substitute equipment and operator experience and preference. The general working order is to recover the buoy first, then the rubber cord(s) and finally the anchor weight, which should be lifted via the polypropylene rope. The rubber cord is a valuable item. Minimise the risk of damage after recovery by handling it carefully and stowing it away from operating areas as soon as practically possible. In the following three typical situations are described. Though recovering the buoy by attaching a rope to the buoy handles is still the most recommended procedure, a correctly mounted triangle can also be used to hoist the buoy.

26.3.1 Exchanging buoys at the same mooring

If the operating vessel has the ability to maintain its position in relationship to the Waverider mooring without extending the rubber cord during the recovery process, this is the quickest method of exchanging a buoy deployed at the same mooring. Lift the buoy from the water using a rope bridal, connected between the two handles fitted to the hull, or use the triangle to lift the buoy. The handles on the hatchcover should not be used for lifting the buoy. Steady or anti-spin lines can be attached to the safety triangle during the lifting procedure. Stow and secure the buoy on the vessel deck. Secure the mooring to the deck at the upper end of the polypropylene rope. Disconnect the mooring between the chain coupling of the buoy and the rubber cord terminal. Connect the mooring to the chain coupling of the replacement buoy, ensuring that the safety shackle is correctly fitted and securely locked with nut and split pin. Free all securing lines to the mooring and the Waverider buoy. Lift the buoy and lower it back onto the water.

During the above operation a member of the recovery team, equipped with a knife, should be stationed close to the secured rubber cord. Should any sudden vessel movement increases the tension in the rubber cord and endanger the recovery personnel, the rubber cord must be cut. It should be noted that this mode of operation may only be used where the vessel is able to maintain its exact position within a couple of meters. Additionally this method does not allow all the mooring to be fully inspected (the rubber cord(s) for cuts and polypropylene rope for wear). If this method is regularly used, increased inspections of the complete mooring must be undertaken.

26.3.2 Recovery using a dummy buoy

Where there is no replacement Waverider buoy, a dummy buoy can be deployed to support the mooring thus avoiding the need to retrieve the complete mooring. An old Waverider equipped with an operating flashlight may be used as a dummy buoy. The procedure is the same as in the above subsection, but has to be applied twice. One time recovering the buoy and a second time swapping it back after inspection and service.

26.3.3 Recovery using a small work boat, rib or dingy

The Waverider cannot be lifted by a small workboat or rib. However, such a vessel may be used to tow the Waverider buoy to a larger one or to shore. Mooring recovery will be by hand, ensuring that no tension is placed on the rubber cord(s). Recovery of the anchor weight must only be achieved by using the polypropylene rope. If the anchor weight cannot be recovered, the polypropylene rope may be cut below the rubber cord leaving the anchor weight and residue rope on the seabed. A 70cm Waverider should not be towed at speeds greater than 2 m/s (4 kn), and a 90cm Waverider should not be towed at speeds greater than 3 m/s (6 kn) because otherwise the buoy will submerge causing a lot of drag.

27 Consumables

The buoy contains several consumables that must be replaced or regenerated at regular time-intervals. In this chapter these consumables are listed. For instructions refer to the chapter or section on the respective part.

27.1 Logger

The logger is filled with BVA files containing all raw information from the buoy. When full the logger will continue logging by overwriting the oldest file. To prevent this, a full logger flash card should either be replaced or its contents moved timely.

27.2 Batteries

As a self-sufficient system Datawell buoys are equipped with batteries. The batteries used by Datawell are made by Datacell Eurl. The DWR4/ACM is equipped with non-magnetic batteries type RC27B.

27.3 Sacrificial anodes

Aluminium sacrificial anodes protect the stainless steel hull through a galvanic reaction. Anodes will approximately last for three years, unless the buoy is located in warm (> 20 ºC) or polluted sea water. However, no guarantee can be given and the rate of anode material consumption must be established through timely inspections.

27.4 Bags of drying agent

In a hermetically sealed buoy the bags with drying agent will protect the buoy electronics from short-circuiting by condensing water vapour. The bags will take up moisture inside the buoy. Only after drying the bags they are able to perform their task during the next deployment.

28 Inspection and maintenance

During the life of your buoy it will require some maintenance even though it may function without error. Furthermore, by carefully inspecting some parts it may be possible to foresee problems and to take measures in advance. Every time you have the opportunity to do so, you should inspect the indicated parts. Finally, some regular maintenance remains.

28.1 Service parts kit

A service parts kit is delivered with each DWR4/ACM buoy containing the following spare parts and tools:

- 1x O-ring for flange hull
- 1x O-ring for antenna port
- 1x Power switch cover
- 1x Serial-to-USB cable
- 4x Hexagon socket screws
- 4x Split pin for 12 mm D-shackle
- 1x grease for O-ring flange, O-ring antenna port, O-ring transducers and O-ring power switch
- 1x CAT4 tester (only when buoy is equipped with CAT4)
- 1x Microfiber cloth (only when buoy is equipped with CAT4)
- 1x Set of tools for removing/installing acoustic transducers*
- 3x Dummy transducers*
- 1x Transponder*
- 1x Tube with acoustic gel*
- 6x O-ring for transducers*

*Only provided with DWR4/ACM

28.2 Opening the buoy and sealing rings

Before you open the hatchcover or any of the option inserts, rinse with fresh water to avoid migration of salt and dirt into screw holes, sealing ring grooves or the buoy interior. Remove dirt from the circular grooves of the hull flange and option ports and inspect the rubber sealing rings for cuts. Clean grooves and intact sealing rings are essential for water tightness. It is advised to replace the O-rings when possible.

28.3 Mooring

Bent terminals in the mooring line may indicate extreme forces. Verify with Datawell whether your mooring is suitable for your local conditions before you redeploy the buoy at the same location. Inspection of the rubber cords and the polypropylene line may show signs of wear. Make use of these early warning signals and think what may be the cause (e.g. rocky bottom) before you redeploy. In chapter 23 on the mooring you will find further suggestions.

28.4 Corrosion

Even when the sacrificial anodes will largely protect your AISI316 buoy hull from corrosion, it is a good habit to inspect the buoy for corrosion upon recovery. In particular you should check below the fender.

28.5 Marine growth

The buoy will continue to function correctly even with considerable amounts of marine growth, such as seaweed and barnacles. For example, the precision of the wave measurement will not be affected. Nevertheless marine growth will increase the drag forces on the buoy and mooring and small incisions due to sharp barnacles may weaken the mooring line. Clean the hull and terminals and inspect both hull and mooring when the buoy is on deck or on land. Marine growth can be removed by a standard pressure washer (150 bar).

In case of the ACM option marine growth will reduce the acoustic signal strength both in transmission and reception.

Marine growth on the solar panel will reduce the energy yield. Removal by means of a standard pressure washer (150 bar) will not damage the panel neither by scratching the polycarbonate surface, nor by affecting the lute between the panel and the stainless steel hatchcover. In case the solar panel has become scratched by other causes they can be removed. Please contact Datawell for advice.

28.6 HF/LED/CAT4 antenna whip

A correctly functioning HF/LED/CAT4 antenna is of utmost importance both for retrieving wave data in real-time and for safe marine traffic. Ship collisions and recovery operations may damage the antenna. Special attention should be paid to cracks in the whip antenna and transparency of the LED lenses. Over time small fibres may show up on the whip antenna. Care should be taken when handling the antenna and it is advised to wearing gloves. Use a sandpaper with fine grit size to remove the fibres. Do not coat or paint the whip antenna.

Additionally, in case of the CAT4 antenna, the different sensor surfaces should be inspected on damages and wear. We recommend rinsing the sensor surfaces with water after which it can be further cleaned using a microfiber cloth with care to avoid scratching the surface.

28.7 GPS antenna

Dirt on the GPS antenna may block the signal. When dirty, clean the antenna with water, soap and a soft piece of cloth.

28.8 Accelerometer fluid level

The stabilized platform vertical accelerometer consists of a fluid-filled sphere. Over the years the fluid evaporates through the Perspex sphere.

As long as the sphere is correctly filled, the accelerometer is a robust sensor with nearly perfectly buoyant invulnerable mechanics in the fluid. However, with insufficient fluid inside the sphere, the mechanics in the fluid will no longer remain perfectly suspended and ultimately will collapse under its own load if deployed at sea. For a long life of your wave motion sensor carefully maintain the sensor fluid level.

The fluid level can be visually inspected through the Perspex lid on the sphere, see Figure 28.1. If the centre of the rubber membrane is pointing upwards, Figure 28.1(a), the fluid level is sufficient. In case the membrane touches the nylon screw, Figure 28.1(b), the fluid is too low and fluid has to be added. Datawell advises to check the fluid level every 3 years. Based on experience the sensor requires a small refill after 6 years.

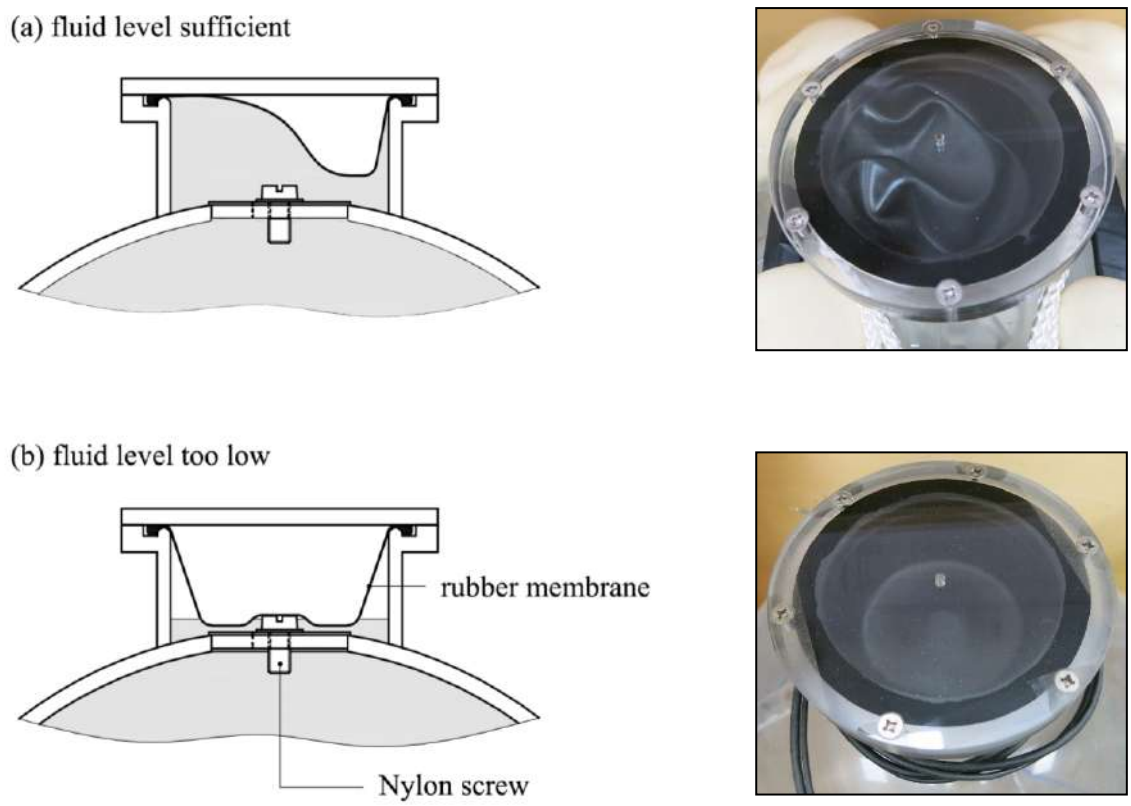

Figure 28.1 Examples of the fluid level of the stabilized platform and vertical accelerometer sensor: (a) fluid level sufficient, (b) fluid level too low

Only fill up the sensor in a clean environment to avoid contamination of the fluid. Do not insert anything but the original sensor fluid. Datawell will readily supply you with a small amount. To avoid damage by spilled fluid wrap some tissue paper around the neck of the sensor. Take off the plastic lid by unscrewing the 6 screw-bolts. Remove the rubber membrane and pour some fluid into the sensor until the level is about 1.5 cm below the top. Reposition the rubber membrane without trapping air beneath it. Some deformation of the membrane may be necessary to do so. Fasten the plastic lid again with the 6 screw-bolts. Remove the tissue and wipe away all spilled fluid on the outside of the sensor.

28.8.1 Horizontal accelerometer

The can of the horizontal accelerometer is filled with the same fluid as the sphere incorporating the stabilized platform. However, evaporation through steel is negligible and checking of the fluid level is superfluous.

28.9 Acoustic transducers

The well proven acoustic sensors made by Reson are the basis or the ACM. Their intrinsic robustness is ruggedized by placing them in recess in a stainless steel or Cunifer housing. Should the surface of the transducer yet get damaged, this does not inevitably lead to failure of the current measurements. Even severe damage of the surface turns out to be acceptable. Nevertheless, it could be possible that one of the transducers fails. In that case the transducer should be replaced.

Also when the hull needs to be sandblasted and/or painted, the acoustic transducers are to be replaced by grey dummies to avoid damage. With each buoy three dummies are supplied, as well as special tools for removing and mounting the transducers.

In almost all marine environments the buoy, and especially the lower half, can suffer from marine growth. This may affect the quality of the current measurement. Care should be taken that the used antifouling does not interfere with the active surface which is made of epoxy.

The subsections below explain how to remove and install the transducers using the tools delivered with the buoy. In the procedure below they are referred to as tool A, tool B, tool C, tool D and Tool E. Each tool has its own functionality. Tool B has two functionalities referred to as B1 and B2, see Figure 28.2

Figure 28.2 Tool A, B, C, D and E.

28.9.1 Transducer removal 0.9m

The procedure for removal is illustrated in Figure 28.3 and described accordingly below.

(a) After disconnecting the SMA connectors from the ACM electronics the first step is to slide tool A over one of the SMA connectors towards the backside of the transducer inside the hull.
(b) Tool A will fit perfectly over the backside of the transducer. Turn tool A in the direction of the arrow to unscrew the fastener of the transducer.
(c) Remove the fastener.
(d) Now slide tool C over the SMA connector in the direction of the transducer.
(e) Turn the aluminium part of tool C in the direction of the arrow to fasten it to the transducer insert.
(f) Now that tool C is attached to the insert you can turn the black part of tool C in the direction of the arrow.
(g) Keep turning until the transducer is fully pushed out of the hull. The transducer is now removed.

Repeat this procedure for the other two transducers.

Figure 28.3 Procedure for removal of an acoustic transducer.
Pictures are labelled (a)-(g) first left to right, then top to bottom.

28.9.2 Transducer installation 0.9m

Before reassembling the transducers it's very important to clean the transducers and the inserts of the transducers thoroughly. Make sure no marine growth is present anymore before reassembling the transducers. Apply the two new O-rings which are delivered with the buoy and check if both O-rings are correctly installed and that they are clean i.e. no sand or other dusty material attached. Best is to remove the old grease and apply a good amount of new grease to the sides of the transducers and a small amount of grease to the sides of the inserts. This grease plays an important role in protecting the inserts against corrosion. Figure 28.4 depicts how to put the acoustic transducer back in place. The procedure has the following steps

(a) Apply a good amount of new grease to the sides (O-rings) of the transducer. Also apply some grease to the side of the insert.
(b) Insert the transducer from the outside of the hull. First the SMA connector followed by the coax cable and transducer.
(c) Use tool B1 and place it on top of the transducer. The thin edge in recess will push on the transducers perimeter but stays clear of the active surface.
(d) Gently push the transducer in the hull as far as tool B1 allows.
(e) Tool B2 has two small pins which fit two corresponding holes on the transducers face.
(f) Gently push the transducer in the hull as far as possible using tool B2.
(g) Now the transducer is recessed in the hull.
(h) Slide the fastener over the SMA connector in the direction of the transducer.
(i) Use tool B2 to prevent the transducer from moving and at the same time use tool A1 to tighten the fastener in the direction of the arrow.

Repeat this procedure for the other two transducers.

Figure 28.4 Procedure for installing an acoustic transducer.
Pictures are labelled (a)-(i) first left to right, then top to bottom.

28.9.3 Transducer removal 0.7m

The procedure for removal is illustrated in Figure 28.5 and described accordingly below.

(a) After disconnecting the SMA connectors from the ACM electronics the first step is to slide tool A over one of the SMA connectors towards the backside of the transducer inside the hull.
(b) Tool D will fit perfectly over the backside of the transducer. Tool D is basically a ratched wrench which can be turned back and forth to unscrew the fastener.
(c) Remove the fastener.
(d) Now slide tool E over the SMA connector in the direction of the transducer.
(e) Also slide tool D over the SMA connector in the direction of the transducer.
(f) Attach tool E to the insert of the transducer and slide tool D over the backside of tool E. Now you can gently turn tool D back and forth so that the transducer will be pushed out of the hull.
(g) Keep turning until the transducer is fully pushed out of the hull. The transducer is now removed.

Repeat this procedure for the other two transducers.

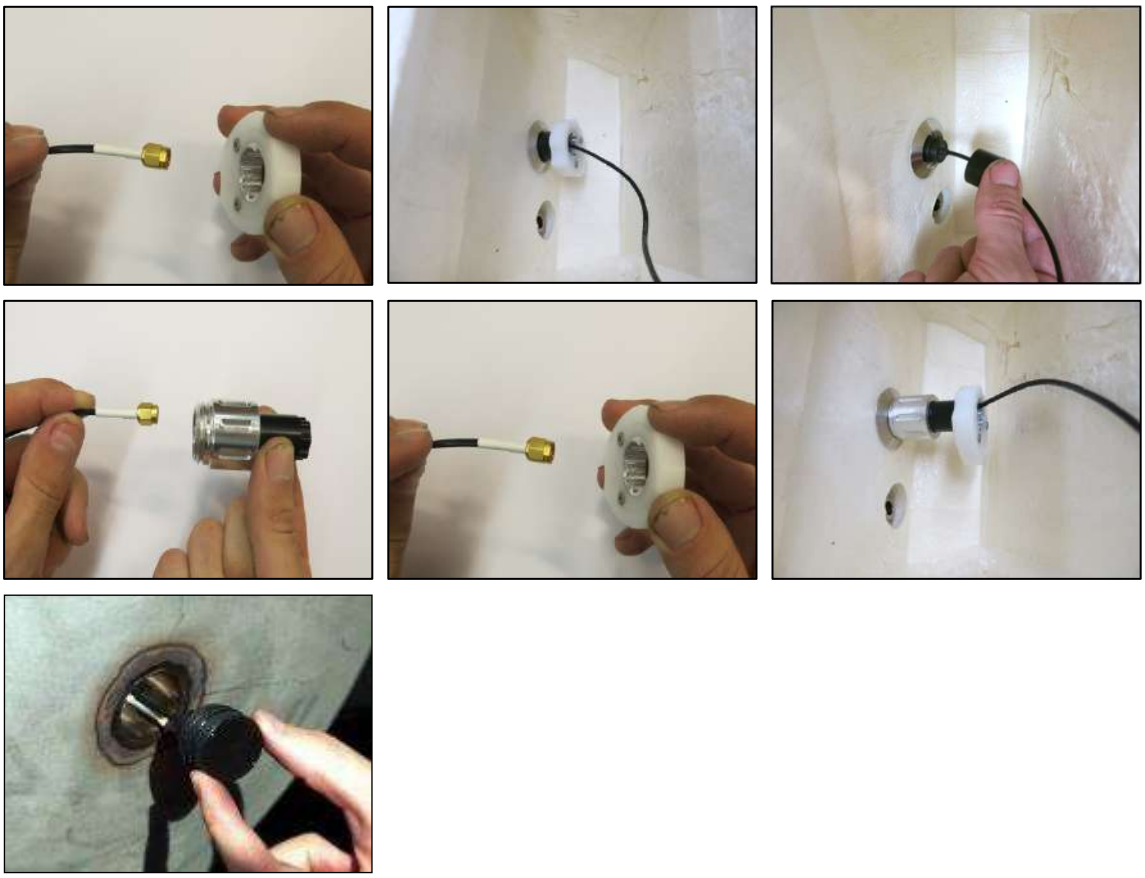

Figure 28.5 Procedure for removal of an acoustic transducer.
Pictures are labelled (a)-(g) first left to right, then top to bottom.

28.9.4 Transducer installation 0.7m

Before reassembling the transducers it's very important to clean the transducers and the inserts of the transducers thoroughly. Make sure no marine growth is present anymore before reassembling the transducers. Apply the two new O-rings which are delivered with the buoy and check if both O-rings are correctly installed and that they are clean i.e. no sand or other dusty material attached. Best is to remove the old grease and apply a good amount of new grease to the sides of the transducers and a small amount of grease to the sides of the inserts. This grease plays an important role in protecting the inserts against corrosion. Figure 28.6 depicts how to put the acoustic transducer back in place. The procedure has the following steps:

(a) Apply a good amount of new grease to the sides (O-rings) of the transducer. Also apply some grease to the side of the insert.
(b) Insert the transducer from the outside of the hull. First the SMA connector followed by the coax cable and transducer.
(c) Use tool B1 and place it on top of the transducer. The thin edge in recess will push on the transducers perimeter but stays clear of the active surface.
(d) Gently push the transducer in the hull as far as tool B1 allows.
(e) Tool B2 has two small pins which fit two corresponding holes on the transducers face.
(f) Gently push the transducer in the hull as far as possible using tool B2.
(g) Now the transducer is recessed in the hull.
(h) Slide the fastener over the SMA connector in the direction of the transducer.
(i) Use tool B2 to prevent the transducer from moving and at the same time turn D back and forth to tighten the fastener.

Repeat this procedure for the other two transducers.

Figure 28.6 Procedure for installation of an acoustic transducer.
Pictures are labelled (a)-(i) first left to right, then top to bottom.

28.9.5 Dummies for painting and sandblasting

If the hull needs to be sandblasted and/or painted the transducers must be removed as described and replaced with three dummies. The dummies mount in the same way as the transducers do using the same Delrin fastener and tool A (or tool D) but only a single O-ring. See Figure 28.7.

Figure 28.7 Dummy transducer on a desk and inserted in the hull.

29 Trouble Shooting

So far faultless buoy behaviour with regular maintenance only has been assumed. This chapter will deal with minor problems that may be traced and solved by yourselves. The easiest way to diagnose buoy problems is to query the onboard microcomputer. It will help you to identify the problem and check if the electronics unit works fine. Still the real problem may lay further down or up with the electronics module of the malfunctioning sensor or communication means. Therefore, the next step is to carry out some checks on the respective module as suggested. If all else fails the buoy must be returned to Datawell Service.

29.1 Buoy diagnosis

The easiest way of fault finding is to plug into the buoy microprocessor directly. Leave the main hatchcover connector string connected, apply external power to the electronics unit and connect a serial cable to your terminal. Send the `status` command and check the buoys response for any irregularities. Furthermore, you should inspect the human-readable SYSLOG.TXT file on the logger flash card for clues, especially at the end.

If no problems are found, the buoy must be switched on while running in verbose mode. In this mode the microprocessor will output a wider range of event messages to your terminal.

29.2 Batteries

A general cause for apparent buoy failure is when the batteries are flat. If the buoy internal processor, sensors or communication means do not get enough power their behaviour can be unpredictable. Before commencing detailed tests of the supposedly malfunctioning buoy part reassure yourself that the batteries are not exhausted. Each installed battery section can be checked separately at the hull control unit. If all series are exhausted replace the batteries or apply external power for further checks.

29.3 Wave motion sensors

29.3.1 Stabilized platform and vertical accelerometer

Below a few symptoms of malfunction of the sensor are described. In case any malfunction is established or suspected please contact our service department.

Under normal circumstances the wave record should have a steady average position. A pronounced peak of the spectral density at the low frequency side of the spectrum raises the suspicion that the stabilized platform suspension is out of order. Persistent peaks that are orders of magnitude higher than 10^{-2} m^2/Hz in the frequency range (0.025-0.035 Hz), corresponding to 1 cm noise, are suspect. Furthermore, in case of a DWR4 the inclination angle, output in response to a `status` request, should correspond to the local inclination angle of the earth magnetic field.

If the mean vertical keeps changing all the time, there may be several causes. An additional long period oscillation (30-40 s) reveals that the platform, on which the accelerometer sits, slightly swings horizontally. Likely causes are turbulence in the fluid or a sudden temperature change, such as occur after launching. Too fast rotations of the Waverider may also cause turbulence. These disturbances will disappear within 24 hours.

If the variation in the mean vertical is rather erratic this may be caused by damaged suspension wires, moisture on the electronics, bad contact in the accelerometer or low battery voltage. A

large or varying offset of the vertical accelerometer in the system message usually indicates a problem related to intermitting contacts.

29.3.2 Horizontal accelerometer

To check the functionality of the horizontal accelerometers, tilt the buoy toward different directions. Consult the buoy axes section for directions and signs and the buoy_tester program section below.

29.3.3 Pitch and roll

To check the functionality of the pitch and roll sensors, tilt the buoy toward different directions. Consult the buoy axes section for directions and signs and the buoy_tester program section below.

29.3.4 Magnetic compass

Before any checks can be carried out we must make sure that the local magnetic field is stable and homogeneous. This is not a simple matter in many indoor situations with large DC currents present or near iron structures. Two compass related outputs may be easily obtained through the console: the orientation of the buoy and the local inclination of the earth magnetic field. Use the `status` request command.

By rotating the buoy over 90º or 180º angles the orientation angle can be checked. The inclination angle test should reproduce the same value when rotating or tilting the buoy. A measured inclination angle which matches the true local inclination within 1.5º indicates that (1) the compass is functioning well, and (2) the offset angle of the platform is not too large. Local inclination may be found on the web, e.g. visit www.ngdc.noaa.gov/seg/potfld/geomag.html. For optimum measurements the stabilized platform should be allowed a multiple of natural periods of 40 s to come to rest and to initialize the digital filter.

29.3.5 Buoy tester application

Direct access with a voltmeter to the analog signals such as pitch and roll is not possible. However, Datawell offers a free software tool, Buoy tester, to monitor these signals. After installing the software a serial connection must be made between PC or laptop and the console port. The software shows readings in volts and appropriate units of x-, y- and vertical acceleration (A_x, A_y, A_v), the three magnetic field components (H_x, H_y, H_z) and pitch and roll. In addition, calculated results such as orientation and inclination are given as well as a 3D image of the buoy.
Please refer to *section 30* for more information.

29.4 GPS position

A GPS receiver is a complex though reliable system. As a consequence a GPS receiver either works perfectly or does not work at all, which makes life simple. However, there are a few things to check before boldly replacing a seemingly faulty GPS receiver.

If you don’t get a new GPS position, your GPS antenna, coaxial cable or connectors may be broke or loose. Verify that the GPS antenna is clean and has a clear view to the sky. Also tall buildings in the near vicinity can block the GPS signal.

29.5 HF transmitter

Transmitter problems typically are indicated by multiple small fractions or occasional large blocks of data missing while running Waves5 software. Furthermore, the signal quality indicator on your RX-C receiver or Buoy Finder informs you about the transmitter’s well-being.

In case of malfunction you should consider both the transmitter and the transmission link as probable causes.

Intermitting radio contact could indicate occasional buoy submersion. This can be checked by a disappearing and reappearing 1500 Hz tone on the RX-C or Buoy Finder. If this is the case your transmitter is probably fine but your mooring could be inappropriate (rubber cord resilience is not enough or current is too strong). In the extreme situation where the antenna touches the water transmission will be very poor. Apart from little ability to overlook the waves also polarization in the wrong direction plays a roll.

A well-known cause of loss of radio contact is a slight misalignment between transmitter and receiver. Usually slight readjustment of your receiving frequency will suffice to restore radio contact. Please consult your receiver manual.

29.6 LED flashlight

You can simply check the LEDs during the start-up phase of the buoy. The LED flashlight will flash its pattern unconditionally during the first 5 minutes after start-up.

29.7 Sea surface temperature sensor

The Sea surface temperature sensor (SST) is located next to transducer 1. This sensor can be tested by measuring the temperature. While in the water you can use warm and cold water. Out of the water you can use a heater. A change of temperature shows that the sensor is functional. Temperature readings are updated every 5 minutes and can be monitored at the console port by issuing a `status` command.

29.8 Compact Air Temperature sensors

The air temperature sensor is incorporated in the CAT antenna and consists of 4 individual sensors. These sensors can be tested using the `forcecat4` console command. Connect the hatchcover console port via a RS232 cable to a laptop/PC running a Terminal application. For correct Terminal settings, please refer to chapter 19.9.1.

The `forcecat4` command will return the following results:

```
CAT4: measurement started, please wait
Timestamp                  2018-09-19 10:06:10
T_air                      21.40 C
T_black                    27.53 C
T_white                    22.78 C
T_metal                    24.23 C
T_grooved                  25.20 C
Evaporation                no
Solar-induced uncertainty  no
Instrument ID              77000
Serial number              14
```

Figure 29.1 Example of forcecat4 console command.

In case you are not sure if the CAT4 antenna is functioning properly or you don't have the CAT4 antenna available and you still want to test the hatchcover electronics, you can use the CAT4 tester as dummy antenna instead. The CAT4 tester will output a fixed air temperature value of 25 °C.

Figure 29.2 CAT4 tester.

29.9 Acoustic current meter

In practice fouling on the transducers is a known cause for bad readings. The solution is simple: clean the transducers. Do not use any hard and sharp tools on the transducer face, use a pressure washer instead. The most important indicator in this respect is the RSSI (received signal strength indication) reading. It is included in the ACM message send over the HF link and to the logger. Furthermore, the ACM information is also (immediately) available after the `statusacm` and `forceacm` requests. It typically varies between −50 and 0 dBr. With increasingly thick fouling the RSSI level falls to −50 dBr where current readings will start to fail. Check the data for trends like this to plan service intervals. To extend these intervals anti-fouling may be applied. Do not use thick layers of anti-fouling on the transducers.

29.9.1 Transponder

Checking the Acoustic Current Meter's functionality before the buoy goes offshore can always be done in a water pool, ditch or lake if available; however this is not at all convenient. In order to check the basic functionality of the ACM in the workshop a so called transponder is available. It is a small and handy tool to check whether the ACM is properly connected and operating.

A transponder comprises two functions. It receives a sound signal from one of the acoustic transducers in the buoy and responds by transmitting a sound signal in return. The acoustic transducers transmit 2MHz sound bursts of 1ms duration. This is repeated 165 times during one ACM measurement, taking about a minute. These ACM measurements take place every 10 minutes. When a transponder is placed on the transducer, using acoustic gel as coupling medium between the two, the sound energy of the transducer drives the piëzo element in the transponder. An internal capacitor is charged by the acoustic energy, powering an internal 2 MHz oscillator, that in turn drives the piëzo element to send a "2 MHz echo" to the transducer.

If the echo shows up in the ACM measurement results then three things are assured:

- the transmit function of ACM board and transducer was successful. If it didn't, the transponder would not have sent an echo.
- the receive function of the ACM board and transducer was successful.
- the connections between ACM board and transducers are correct (plug 1 to transducer 1, plug 2 to transducer 2 and plug 3 to transducer 3)

29.9.2 Testing the ACM functionality

The functionality of the transducers can easily be tested when you connect the console of the buoy to a laptop or PC running a Terminal application. With the `forceacm` command you will force the ACM to execute a measurement immediately. The measurement will take about 1 minute before the results are displayed on the Terminal screen.
With the `statusacm` command you can request the latest ACM message. This information is available immediately.

Figure 29.3 Acoustic gel and transponder.

Before you start testing each transducer, you have to glue the transponder to one of the transducers. Make sure that the surface of the transducer is clean and free from any irregularity like fouling fragments.
The transponder requires a good acoustic coupling with the transducer. Even small irregularities can affect this acoustic coupling. If anti-fouling paint is applied on the transducers, the layer should be flat and not too thick.

Place a dot of acoustic gel on the transponder surface and then place the transponder on top of transducer 1, see Figure 29.4 and 29.5.
Rotate the transponder once for about 20 degrees clockwise and counter clockwise while still pressing. This will spread the gel between transponder and transducer creating a proper acoustic coupling and avoiding the encapsulation of air bubbles. The transponder can stay in place for hours if needed, provided the transducer surface is sufficiently flat. If it isn't, the transponder could fall of in minutes.

Figure 29.4

Figure 29.5

Execute the `forceacm` command and check the RSSI values.
Repeat the procedure for the transducers 2 and 3. Refer to the next chapter for evaluation.

29.9.3 Expected RSSI values

When the buoy is not in the water and without any transponder placed on the buoy, the expected RSSI levels for transducer 1, 2 and 3 are respectively -55 dBr, -55 dBr and -53 dBr ± 3 dBr. These are the so called noise floor levels.

Please note that the noise floor levels of transducers 2 and 3 can not be assessed correctly whilst the transponder is placed on transducers 1. Likewise the noise floor level of transducer 3 can not be assessed correctly whilst the transponder is on transducer 2. This is due to the specific behaviour of the transponder and crosstalk effects. The effect is small but noticeable (<-35 dB). It is beyond the scope of this document to explain the background of this.

If the transponder is perfectly acoustically connected to one of the three transducers, the measured RSSI result for that transducer should meet the factory value for the specific transponder. For the transponder the value lies between -4 dBr and -15 dBr. Since perfect acoustic coupling between transducer and transponder is not guaranteed in practice, the measured RSSI value can be a few dB's less.
A layer of anti-fouling paint on a transducer affects its acoustic behaviour and reduces the RSSI value. For a thin layer of anti-fouling paint the effect is small. So, if anti-fouling paint is applied, the layer should not be too thick. A 60 µm thick layer reduces the RSSI by approximately 1 to 3 dB which is allowable (the effect of fouling will be much more). The layer should be flat as well. The transponder will not stay in place on an irregular surface.

Besides RSSI data, velocity data is presented. Evaluated from the frequency difference between transmitted and received signals. The transmitted frequency is stable and accurate to 2 MHz. The "echo" made by the transponder's oscillator is less accurate and less stable. This makes it impossible to predict the velocity that will be measured. No conclusions should hence be drawn on the basis of the transponder velocity data.

30 Buoy Tester Application

30.1 Installation and preparations

Before installing the buoy tester program, make sure that no other programs are active and that the computer has enough free harddisk space for the installation. The minimum system requirements are

Operating system	: Windows 7 or higher
Free harddisk space	: 500 MByte
Processor speed	: 1GHz
Free RAM	: 512 MByte
Screen resolution	: 1024x768

Execute the file setup.exe and follow the instructions on the screen.

30.2 Buoy tester

30.2.1 Software usage

The Buoy tester program requires the use of the buoys serial port or console.

Make sure that the buoy is switched on and connected to the computer serial port before starting the buoy tester program. Also stop/exit the program before disconnecting the serial cable, if not the electronics unit will remain in the startraw(MkIII) or rawout (DWR4) operating mode until the power is cycled or the electronics unit is set into normal mode using the command “stopraw” (MkIII) or “stdout” (DWR4).

30.2.2 Settings

The Buoy tester program uses the serial port of the computer, depending on the configuration of your system this serial port can be a “real” serial port or a virtual serial port created by a “USB to serial port” adapter. The first time you start this program, you are asked to select the serial port that you want to connect to the electronics unit of the buoy.

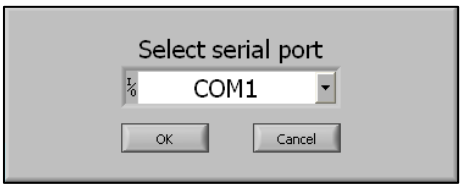

This selection is saved, therefore you don’t have to do this every time you use this program. If you want to change to a different serial port, then click the “edit” button in the settings screen. Be aware that, choosing a different serial port, requires the program to restart.

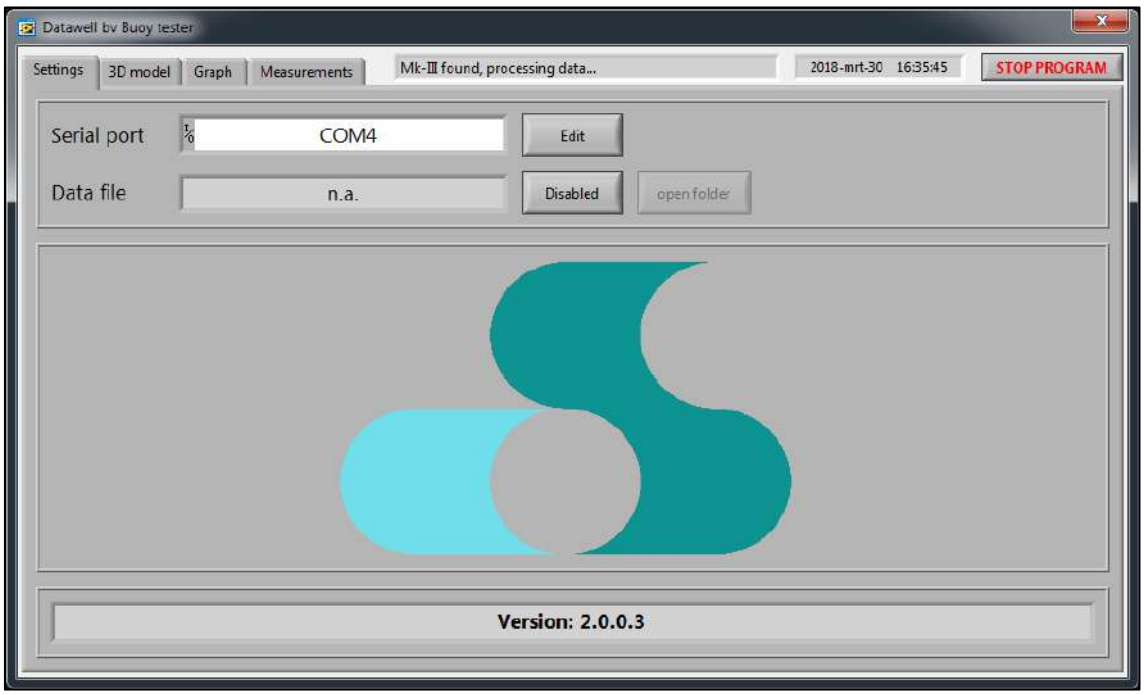

Visible above all screens is a status indicator. This indicator shows if the computer is receiving valid data from a buoy. It starts with the text “Initializing…” and will (depending on the data received) show MkIII or DWR4 found once valid data is received.

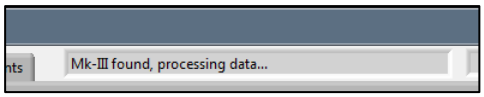

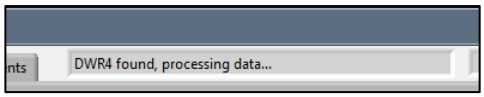

When the electronics unit of the buoy isn’t connected or the electronics unit is not in the startraw (MkIII) or rawout (DWR4) mode then the indicator will show the text “Searching for electronics unit…”. Then the buoy tester program (re)sends the “startraw” and “rawout” commands to the electronics unit. It repeats this, every 5 seconds, until data is received.

When the Buoy tester program is stopped/closed, the command “stopraw” and “stdout” are automatically send to the buoy. This stops the rawout messages and returns the buoy to its normal state. If for some reason the buoy does not receives this command (for example the serial connection was already removed) then the buoy remains in the rawout-mode. This does not affect the functionality of the buoy, however it makes further use of the console impossible. In order to manually terminate the rawout mode simply type the command “stopraw” (MkIII) or “stdout” (DWR4) in your terminal screen or remove power from the electronics unit for at least 10 seconds.

The settings page also shows a “Data file” indicator. This indicator shows the filename of the data file that is being generated by the program. This data file is described further on in the manual.

30.2.3 3D model

This screen holds display the buoys sensor information in the most intuitive manor. When you tilt the buoy you will immediately see 3D representation of the buoy tilt in the same direction. Also rotating the buoy will cause the 3D model to rotate as well as the compass. The 3D model of the buoy shows pitch, roll and yaw and the compass shows the yaw or to be more precise, the orientation. Below the compass is the orientation of the buoy shown in degrees, the front of the buoy is looking into that direction.

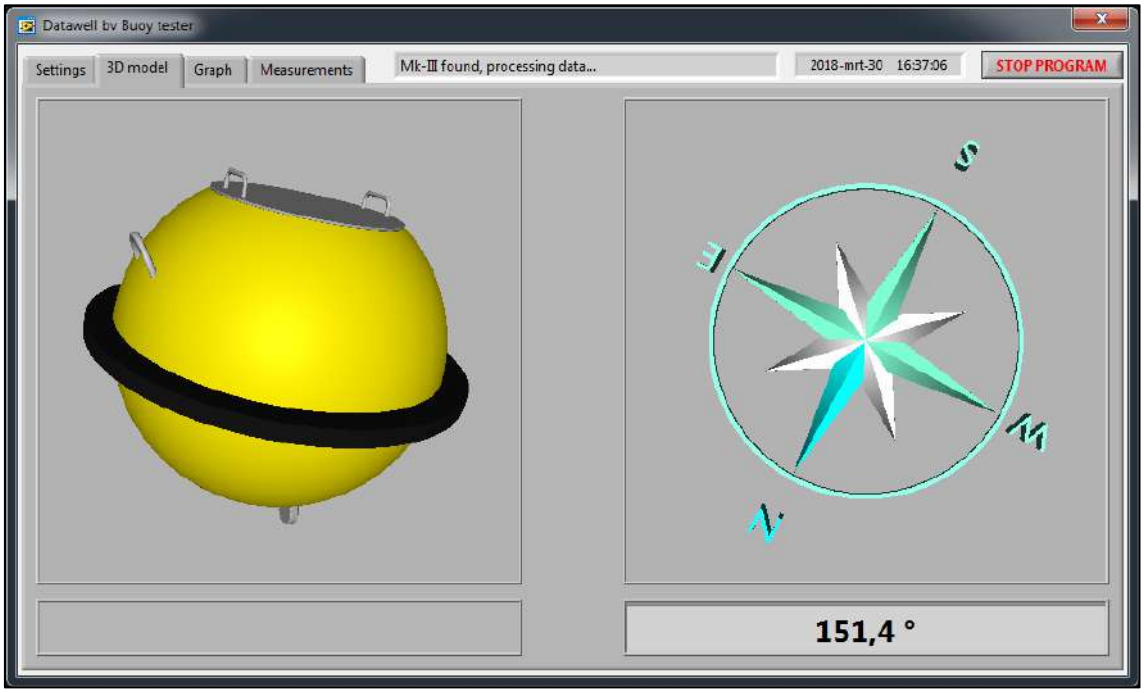

The compass must be interpreted in the following way. Visualise yourself that the display showing the compass is placed flat onto the buoy where the top of the screen is pointing towards the serial number of the hull. In that situation the compass will always point with the N towards North, just as if you’ve placed a real compass on top of the buoy.

30.2.4 Graph

This screen holds display the buoys sensor information in a graph. Graphs can be useful to indicate the trend of signals that change slowly over time. The screenshot shows the situation where a stationary buoy is moved into various a different positions.

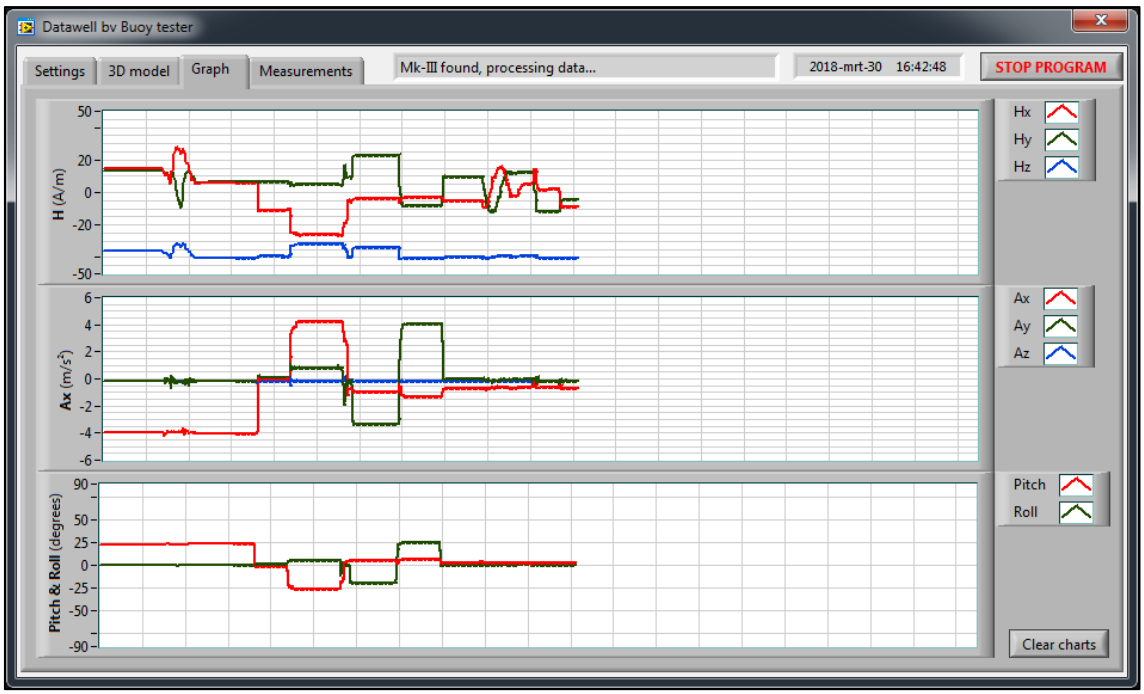

The axis scale(s) of the graphs are not always of the preferred value. Sometimes the signals are simply too small to properly see, in that case the scale of the graph needs to be adjusted. There are two ways to do this. One way would be to automatically rescale the graph based on the displayed data. Select this mode by moving your mouse onto the Y-axis of the graph and by pressing the right-mouse button a menu will appear. Now select the automatic mode for the desired axis, the graph will now automatically adjust the axis scale to fit the graph.

Another method would be by manually changing the values of the axis scale. Just move the mouse pointer to the min. or max. value of the graph. Then click the left mouse button, you will now be able to edit the scale value to any value.

The changes to the graphs axis scale(s) are not saved, meaning that the next time the program is started, the scales will look like the screen as shown in the image above.

30.2.5 Measurements

This screen holds the most basic representation of the buoys sensor data. The screen is divided into 3 separate columns. The first column shows the raw values, the sensor data is represented in volts. Because the buoy digitizes these signals directly from the sensor a breakout box is no longer required to get this information when using this program. This program shows you a complete overview of all measured signals in raw and processed format, where in the breakout box you would require a least 8 voltmeters in order to get the raw information.

But raw information (mostly) isn't very practical, therefore it is also shown in the proper units visible in the second column. This column also shows a "Total" value. This value is the total of the magnetic flux passing through the compass of the buoy. Considering that the magnetic flux passing through the compass is the same for all possible positions of the compass, this value is a great indicator to show the functional state of the 3 channels of the compass. If this total varies greatly, when rotating/tilting the buoy, then the compass has a defect or the magnetic field around the buoy is greatly distorted (caused by for instance: nearby large/heavy metal objects, strong magnets, powerful electric machinery).

The third column shows the information derived/calculated from the raw sensor data. Also the sensor temperature is shown (DWR4 buoy only). This is the temperature of the accelerometer sensor, as long as this value is between -5°C and +40°C your sensor is safe.

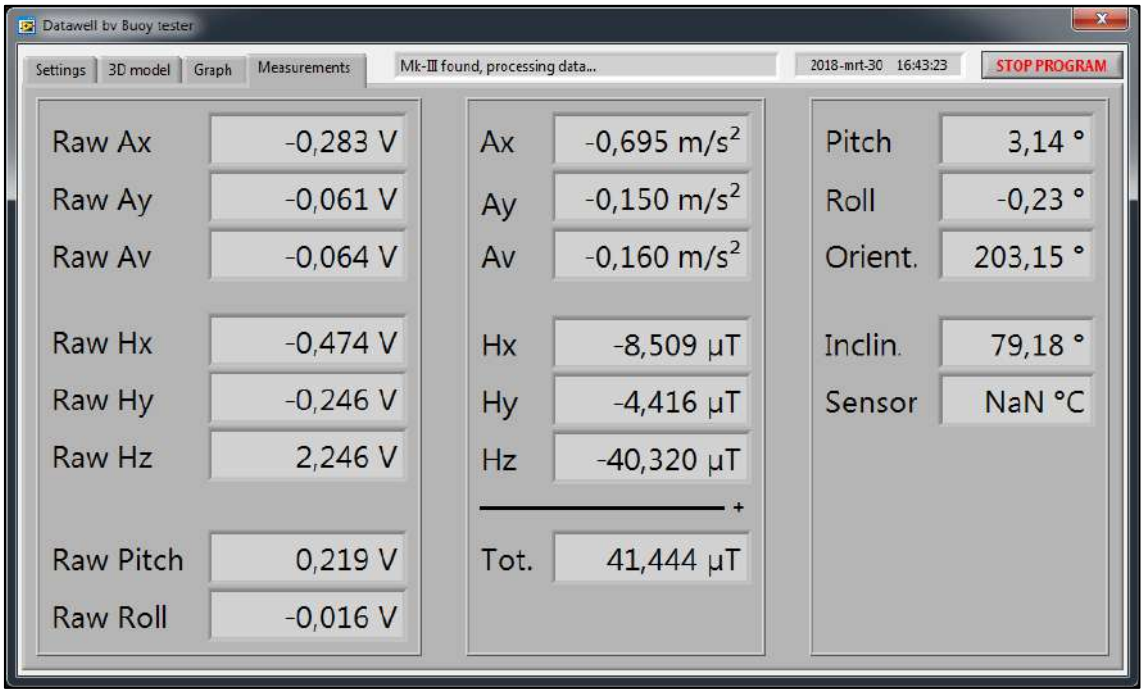

30.3 Data file

In some cases, showing the data on a screen, is not enough. Therefore the buoy tester software also can store the data received from the buoy to a data file. This allows for further processing of the data from the buoy.

All the data that is shown in the “measurements” page is stored to a data file. But this is not by default. In order to enable the saving of the buoys data to the data file, the user must enable this by clicking on the enable/disable button in the “settings” page.

Shown below is the situation where the saving of the data is disabled. The indicator with the filename of the data file is set to n.a. (not applicable).

Shown below is the situation where the saving of the data is enabled. The indicator with the filename is filled with the name of the file and the enable/disable button is bright green. The button “open folder” is also enabled and by clicking this button an explorer window is opened to the path of the data files, allowing the user easy access to all data files.

When the saving of data has been enabled and the user has enough data then the saving of data can be disabled by clicking on the enable/disable button. The user may also directly stop the buoy tester program, by closing the program window or by pressing the “stop program” button.

30.3.1 File location

The data file generated by the buoy tester software is saved to the “my documents” folder on the PC. This folder is a folder directly coupled to the login name of the user and allows the user to read/write and modify without authorisation problems. To indicate the path of this file the “settings” page has an indicator showing the filename of the data file.

The filename is automatically generated. And to prevent overwriting previous files, a timestamp is embedded in the filename. This way the files will be always sorted in correct order and can be easily found. The filename looks like: data_<YYYY>_<MM>_<DD>_<HH>_<MM>_<SS>.txt The timestamp indicates the moment of the first line of data in the file.

30.3.2 File size

The buoy tester software generates data at a rate of 2.5Mbyte/hour. Though for modern standards this is not much. However it is something to be kept for situations where the program is to be used for long periods of time, because the buoy tester program does not remove these data files when hard-disk space runs low. It is up to the user to maintain the data in the “my documents” folder and to manually remove files if hard disk space runs low.

30.3.3 File contents

The data file is set up as a text file, were the data is defined in columns and each column is separated by a tab.

The first line is a header line and shows the meaning and unit of each column. Because of the %-sign the header line can be ignored automatically by some spreadsheets and/or data processing software. For instance the program “octave” will ignore everything behind the %-sign and will therefore not process the first line.

The second line holds the first set of data, this line is the data sampled at the moment of the timestamp as used in the file name. The data sampled after that is appended to the file. Data is sampled (and added to the file) at a rate of 5.12Hz.

Below an example of the data file

%Raw_Ax(V)	Raw_Ay(V)	Raw_Av(V)	Raw_Hx(V)	Raw_Hy(V)	Raw_Hz(V)	Raw_Pitch(V)	Raw_Roll(V)	Ax(m/s2)	Ay(m/s2)	Av(m/s2)	Hx(uT)
	Hy(uT)	Hz(uT)	Total(uT)	Pitch(deg)	Roll(deg)	Orient(deg)	Incl(deg)	Sensor(C)			
-0.153	-0.231	-0.025	-0.051	0.619	2.076	0.203	-0.168	-0.377	-0.567	-0.062	-0.920
	11.110	-37.276	38.954	2.92	-2.40	106.59	75.75	17.1			
-0.153	-0.231	-0.025	-0.051	0.619	2.076	0.204	-0.168	-0.376	-0.566	-0.061	-0.920
	11.114	-37.276	38.907	2.92	-2.40	106.51	75.73	17.1			
-0.153	-0.231	-0.025	-0.051	0.619	2.076	0.203	-0.168	-0.376	-0.566	-0.061	-0.920
	11.114	-37.276	38.908	2.92	-2.40	106.50	75.73	17.1			
-0.153	-0.231	-0.025	-0.051	0.619	2.076	0.203	-0.168	-0.376	-0.566	-0.061	-0.920
	11.114	-37.269	38.908	2.92	-2.41	106.50	75.73	17.1			
-0.153	-0.231	-0.025	-0.052	0.619	2.076	0.203	-0.168	-0.376	-0.567	-0.062	-0.927
	11.110	-37.273	38.902	2.91	-2.41	106.50	75.73	17.1			
-0.153	-0.231	-0.025	-0.051	0.619	2.076	0.204	-0.168	-0.376	-0.566	-0.062	-0.924
	11.114	-37.269	38.904	2.92	-2.40	106.56	75.73	17.1			
-0.153	-0.231	-0.025	-0.051	0.619	2.076	0.203	-0.168	-0.376	-0.566	-0.062	-0.924
	11.110	-37.273	38.902	2.91	-2.40	106.51	75.73	17.1			
-0.153	-0.231	-0.025	-0.051	0.619	2.076	0.204	-0.168	-0.376	-0.567	-0.062	-0.917
	11.114	-37.276	38.904	2.92	-2.41	106.55	75.74	17.1			
-0.153	-0.231	-0.025	-0.051	0.619	2.076	0.203	-0.168	-0.376	-0.566	-0.062	-0.924
	11.110	-37.269	38.908	2.92	-2.41	106.49	75.73	17.1			
-0.153	-0.231	-0.025	-0.051	0.619	2.076	0.203	-0.168	-0.376	-0.567	-0.062	-0.920
	11.114	-37.269	38.901	2.91	-2.40	106.50	75.73	17.1			
-0.153	-0.231	-0.025	-0.051	0.619	2.076	0.203	-0.168	-0.376	-0.567	-0.062	-0.924
	11.114	-37.269	38.902	2.92	-2.40	106.50	75.72	17.1			

31 Calibration and repair

31.1 Calibration

Datawell recommends you send your buoy for calibration every 6 years approximately.

31.2 Repair

If your buoy does not function correctly and, although you may have tracked down the problem with help of the *Trouble shooting* chapter, you are not able to solve the problem, the malfunctioning buoy (part) should be send to Datawell Service. See the Contact chapter.

31.3 Assistance and training

Datawell offers you to hire a service and repair specialist to train your personnel.
Ask our Sales Department or Service Department.

32 Contact

To contact Datawell Service, you can use the following address or numbers. If you ship buoys or buoy parts please use the same address.

Datawell BV
Voltastraat 3
1704 RP Heerhugowaard
The Netherlands

Phone +31- (0)72 534 5298
Email service@datawell.nl

If you use airfreight please use following address:

DATAWELL BV
c/o DHL Global Forwarding
Prestwickweg 1
1118 LC Schiphol-SE
Amsterdam airport
The Netherlands
Notify: DATAWELL BV
TEL: +31-(0)23-5316053

32.1 Serial number

If you have any questions regarding your buoy or if you encounter problems and you wish to contact Datawell, please keep the serial number at hand. The former is located on the top centre of the hatchcover in the middle of the option ports.

33 References

[Long63] Longuet-Higgins M.S., Cartwright D.E., Smith N.D., *Observation of the directional spectrum of sea waves using the motions of a floating buoy*, in Ocean wave spectra, Prentice-Hall, 1963, pp 111-136.

[Rad93] Rademakers P.J., *Waverider-wavestaff comparison*, Ocean Engineering, vol 20, no 2, pp 187-193.

[Tuck01] Tucker M.J., Pitt E.G., *Waves in ocean engineering*, Elsevier ocean engineering book series, vol 5, Elsevier, 2001.

FCC ID: 2BEZA-DWR4

Notice:

Any changes or modifications not expressly approved by the party responsible for compliance could void your authority to operate the equipment.

Note: This equipment has been tested and found to comply with the limits for a Class B digital device, pursuant to part 15 of the FCC Rules. These limits are designed to provide reasonable protection against harmful interference in a residential installation. This equipment generates, uses, and can radiate radio frequency energy and, if not installed and used in accordance with the instructions, may cause harmful interference to radio communications. However, there is no guarantee that interference will not occur in a particular installation. If this equipment does cause harmful interference to radio or television reception, which can be determined by turning the equipment off and on, the user is encouraged to try to correct the interference by one or more of the following measures:

- Reorient or relocate the receiving antenna.
- Increase the separation between the equipment and receiver.
- Connect the equipment into an outlet on a circuit different from that to which the receiver is connected.
- Consult the dealer or an experienced RF technician for help.