Created by: LOISILLIER Arthur	Reference FCE-2021-0223	Title PSA SPS Datasheet	
Revised by: Akshay Malpani	Date 2022-11-22	Edition N°: 1.7	Status Completed

PSA SPS
Product Datasheet

HISTORY

Rev	Status	Date	Author	Reviewer	Description
1.0	Completed	2021-03-26	Komal Bhatt	Arthur Loisillier	Creation for TCS
1.1	Completed	2021-05-17	Komal Bhatt	Arthur Loisillier	Creation for TCS
1.2	Completed	2021-07-28	Akshay Pedhiwal	Arthur Loisillier	Update for final offer
1.3	Completed	2021-10-21	Akshay Pedhiwal	Rakesh Jadhav Erwan Lepape	Update for commercial offer
1.4	Completed	2022-25-1	Manjiri Mulye	Rakesh Jadhav	Updated as per revised scope
1.5	Completed	2022-11-2	Manjiri Mulye	Rakesh Jadhav	Updated TSO reference
1.6	Completed	2022-07-14	Akshay Malpani	Rakesh Jadhav	Updated base on Scope of the project till 15th July
1.7	Completed	2022-11-22	Akshay Pedhiwal	Rakesh Jadhav	Updated the HW architecture

Created by: LOISILLIER Arthur	Reference FCE-2021-0223	Title PSA SPS Datasheet	
Revised by: Akshay Malpani	Date 2022-11-22	Edition N°: 1.7	Status Completed

1 CONTENTS

1 Contents 2
2 Product overview 5
2.1 System variants 5
2.2 System block diagram 5
2.3 Functional Requirement 6
2.3.1 Main features 6
2.3.2 System Modes 8
2.3.3 BT Functionality 9
2.3.4 SWC Functionality 9
3 Hardware 10
3.1 Hardware variants overview 10
3.2 Architecture Block diagram 11
3.2.1 SPS Variant 2.1.A _with T-Box, w/o Tuner 11
3.2.2 SPS Variant 2.1.B_ w/o T-Box, w/o Tuner 11
3.2.3 SPS Variant V2.2.A: with T-Box, With Tuner 12
3.2.4 SPS Variant V2.2.B w/o T-Box, with Tuner 12
3.2.5 Assumptions and notes 13
3.3 PCB Board stack up 13
4 Electrical characteristics 14
4.1 Power supply 14
4.2 Main components 14
4.2.1 MCU 15
4.2.2 Bluetooth 16
4.2.3 Audio Amplifier 16

Created by: LOISILLIER Arthur	Reference FCE-2021-0223	Title PSA SPS Datasheet	
Revised by: Akshay Malpani	Date 2022-11-22	Edition N°: 1.7	Status Completed

4.2.4 Audio Codec 17
4.2.5 CAN Transceiver 18
4.2.6 Radio Tuner 18
4.2.7 SDRAM 19
4.2.8 Flash Memory 20
4.3 Connectors and interfaces 20
4.3.1 Overview 20
4.3.2 Main Connector Interface 22
4.3.3 Tuner Interface 23
4.3.4 SWC Interface 25
4.3.5 Button Interface 27
4.3.6 Mic Interface: 28
4.3.7 Speaker Interface 31
5 Mechanical 32
5.1 2D view 32
5.2 3D view 33
5.3 Exploded view 35
5.4 Mechanical Specification 36
6 Software 37
6.1 Architecture 37
6.1.1 Architecture - with tuner Variant 37
6.1.2 Architecture - without tuner Variant 38
6.1.3 Applications 39
6.1.4 Middleware & services 40
6.1.5 BSP (Board support Package) 41

Created by: LOISILLIER Arthur	Reference FCE-2021-0223	Title PSA SPS Datasheet	
Revised by: Akshay Malpani	Date 2022-11-22	Edition N°: 1.7	Status Completed

6.2 Operating system 41
6.2.1 Free RTOS 41
6.3 SW Features 42
6.3.1 Pass-Through VR 42
6.3.2 Bluetooth 42
6.3.3 Audio 43
6.3.4 CAN 44
6.3.5 Diagnostic – UDS 44
6.3.6 EC/NR 44
6.4 SW Updates 47
6.5 Cybersecurity concept 47
7 Validation 48
7.1 Test rig setup for CAN validation 48
7.2 Test rig setup for system test 49
7.3 Test rig setup for functional test 50
7.4 BT interoperability test 51
7.5 Functional validation test types 51
7.6 Qualification test 53
8 Certifications & Regulation 55
9 TSO Reference 56

Created by: LOISILLIER Arthur	Reference FCE-2021-0223	Title PSA SPS Datasheet	
Revised by: Akshay Malpani	Date 2022-11-22	Edition N°: 1.7	Status Completed

2 PRODUCT OVERVIEW

This datasheet presents the proposed silver box - In Vehicle Infotainment system:

- Different functions and features such as Smart Phone media interface through Bluetooth, Bluetooth telephony, Radio feature like AM/FM, audio system along with microphone & Speaker interface.
- Button not in scope, Functionality supported through silver box only as per Button SRS sign off.
- Software update via CAN.
- BT for connectivity with PSA defined mobile application. (App development in STLA Scope)
- Security mechanisms (As per Cyber security SRS sign off) in both hardware and software.

2.1 SYSTEM VARIANTS

Variant	Region Applicable	Tuner	CAN Termination Resistor
V2.1. A	DEUR, DIAP	No	No
V2.1. B	DIAP, DRUC	No	Yes
V2.2. A	DMOA	Yes	No
V2.2. B	DMOA, DRUC	Yes	Yes

***Note: Region confirmation as per STLA**

2.2 SYSTEM BLOCK DIAGRAM

Created by: LOISILLIER Arthur	Reference FCE-2021-0223	Title PSA SPS Datasheet	
Revised by: Akshay Malpani	Date 2022-11-22	Edition N°: 1.7	Status Completed

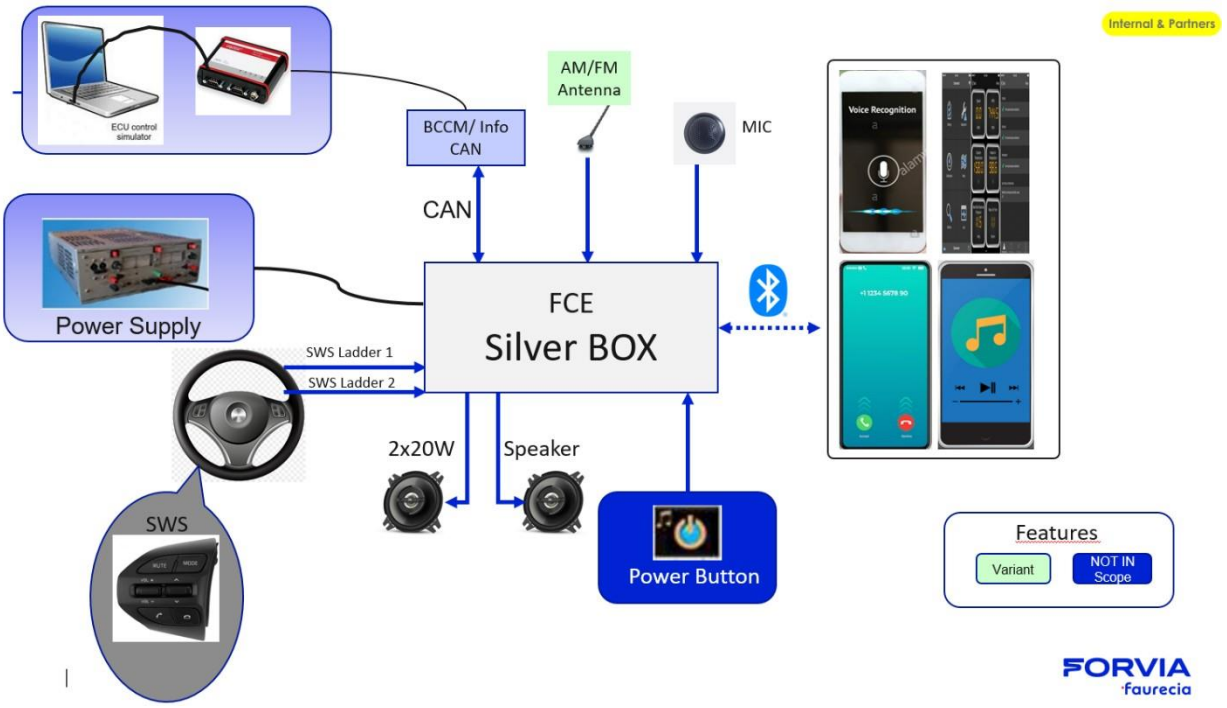

2.3 FUNCTIONAL REQUIREMENT

2.3.1 Main features

Feature	Description
Volume settings	Individual volume control for Phone & media through SWC
Audio	BT Audio, Tuner Audio, Power Button Beep
BT	• Hands – free Telephony: • Call accept/ Call reject, Mute – Through SWC • Accept/ Reject/ Mute/Pass through VR via Silverbox • (Conference, Merge, swap, Hold) - Through Smartphone
Audio Mute	All audio sources will be muted during audio mute (Via SWC). audio mute will be received through CAN bus. (When E-Call is triggered)

Created by: LOISILLIER Arthur	Reference FCE-2021-0223	Title PSA SPS Datasheet	
Revised by: Akshay Malpani	Date 2022-11-22	Edition N°: 1.7	Status Completed

Power Button	Power Button not in scope. Functionality support through silver box only as per Button SRS V1.6
Speakers	2 speaker Interface, 2x 20W
Smart phone integration	With Bluetooth, Application from PSA (Through BT)
Vehicle Interface	CAN_HS (500kbps)
SWC	Vol up, Vol Down, call accept/seek up, call reject / Seek Down, VR, SRC, Mute
AM/FM	AM/FM stations with 12 Presets in each list
Cyber Security	As per CS SRS

Created by: LOISILLIER Arthur	Reference FCE-2021-0223	Title PSA SPS Datasheet	
Revised by: Akshay Malpani	Date 2022-11-22	Edition N°: 1.7	Status Completed

2.3.2 System Modes

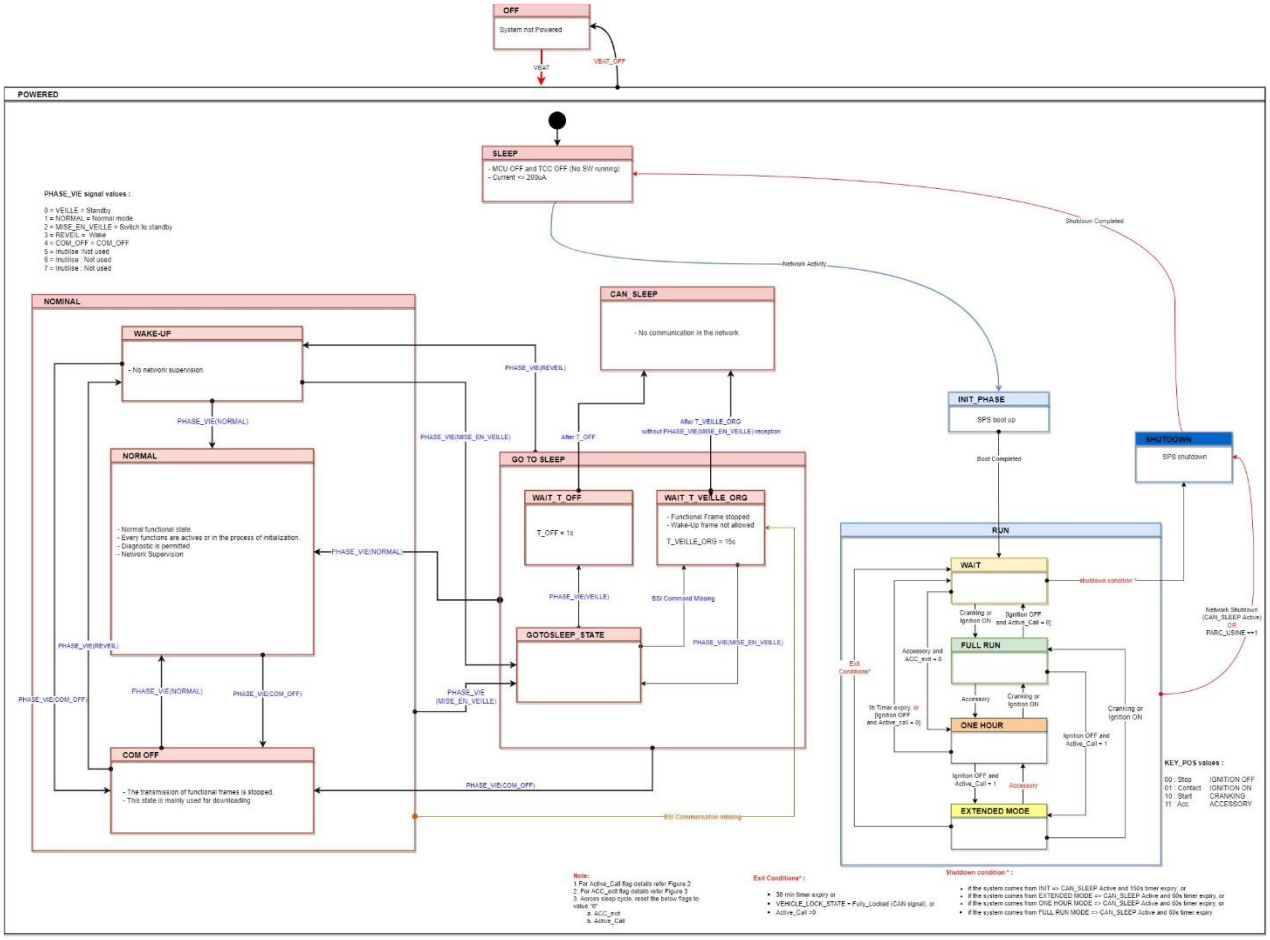

Figure 1

*As per Power Management SRS

Created by: LOISILLIER Arthur	Reference FCE-2021-0223	Title PSA SPS Datasheet	
Revised by: Akshay Malpani	Date 2022-11-22	Edition N°: 1.7	Status Completed

ECU State	SPS Functions	Diagnostic Communication
OFF	Inactive	Inactive
SLEEP	Inactive	Inactive
INIT	system initialize	Inactive
ONE HOUR MODE	All SPS functions active for one hour	Inactive
FULL RUN MODE	Fully Functional	Active
Extended Mode	All SPS function active for 30 mins	Inactive
SHUTDOWN	Inactive	Inactive
COM OFF Mode	Inactive	Active

2.3.3 BT Functionality

BT Functionality as per the BT SRS

Feature	Details
BT Connection	1. BT Discoverable mode (if pairing list not available) 2. BT auto connection mode ON (if pairing list available)
Pairing initiation	One-way pairing, SPS will be discoverable and pairing to be initiated by Mobile phone only
Discoverable + Pairing time at Power ON	120 sec
Number of last pairing devices – At Power ON	5
BT Discoverable Mode /Autoconnect	By default, at every Ignition ON
Connectivity platform	iOS (iPhone 7 onwards) and Android (version 9,10,11,12), Windows, Blackberry

2.3.4 SWC Functionality

Created by: LOISILLIER Arthur	Reference FCE-2021-0223	Title PSA SPS Datasheet	
Revised by: Akshay Malpani	Date 2022-11-22	Edition N°: 1.7	Status Completed

*SWC Functionality as per SWC SRS

3 HARDWARE

3.1 HARDWARE VARIANTS OVERVIEW

SPS Variants	CAN Termination resistor	Descriptions
SPS V2.1. A	-	Vehicle variants with T-Box, w/o Tuner
SPS V2.1. B	Yes	Vehicle variants w/o T-Box, w/o Tuner
SPS V2.2. A	-	Vehicle variants with T-Box, with Tuner (AM/FM Brick)
SPS V2.2. B	Yes	Vehicle variants w/o T-Box, with Tuner (AM/FM Brick)

Created by: LOISILLIER Arthur	Reference FCE-2021-0223	Title PSA SPS Datasheet	
Revised by: Akshay Malpani	Date 2022-11-22	Edition N°: 1.7	Status Completed

3.2 ARCHITECTURE BLOCK DIAGRAM

3.2.1 SPS Variant 2.1.A _with T-Box, w/o Tuner

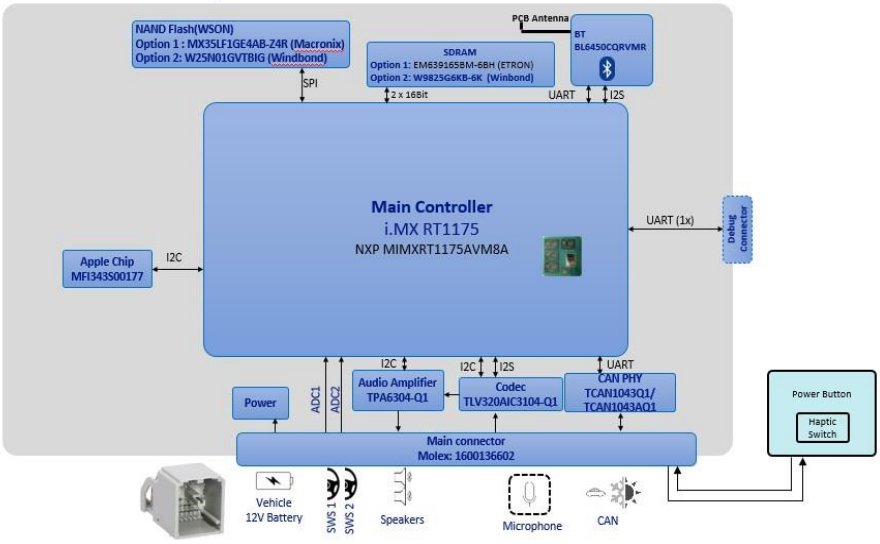

3.2.2 SPS Variant 2.1.B_ w/o T-Box, w/o Tuner

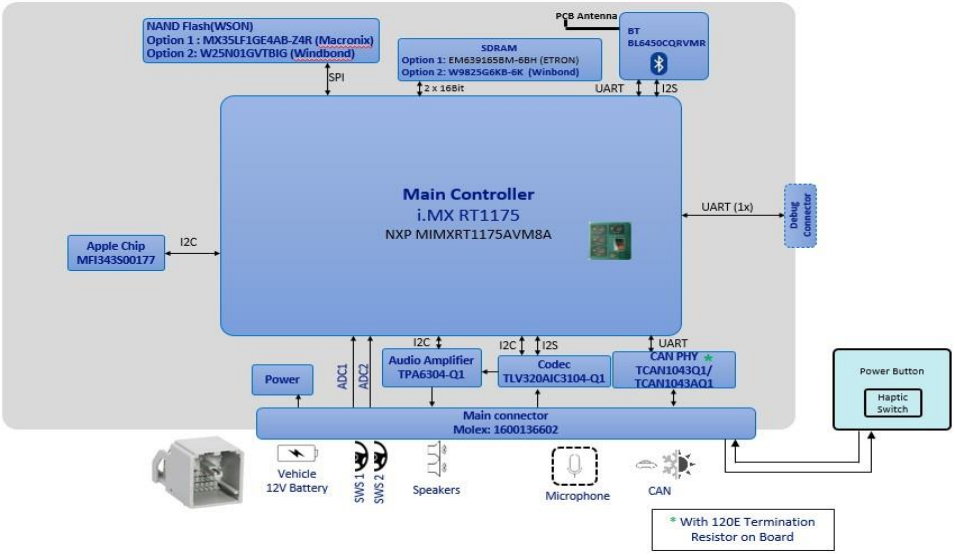

Created by: LOISILLIER Arthur	Reference FCE-2021-0223	Title PSA SPS Datasheet	
Revised by: Akshay Malpani	Date 2022-11-22	Edition N°: 1.7	Status Completed

3.2.3 SPS Variant V2.2.A: with T-Box, With Tuner

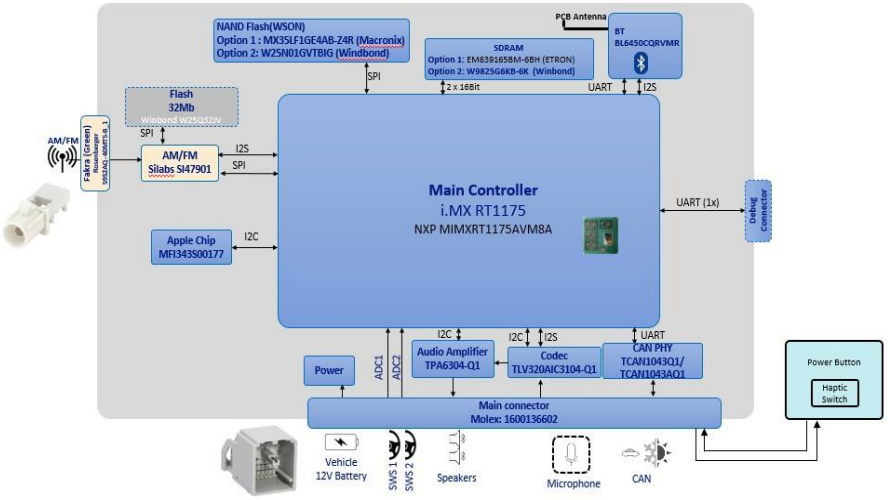

3.2.4 SPS Variant V2.2.B w/o T-Box, with Tuner

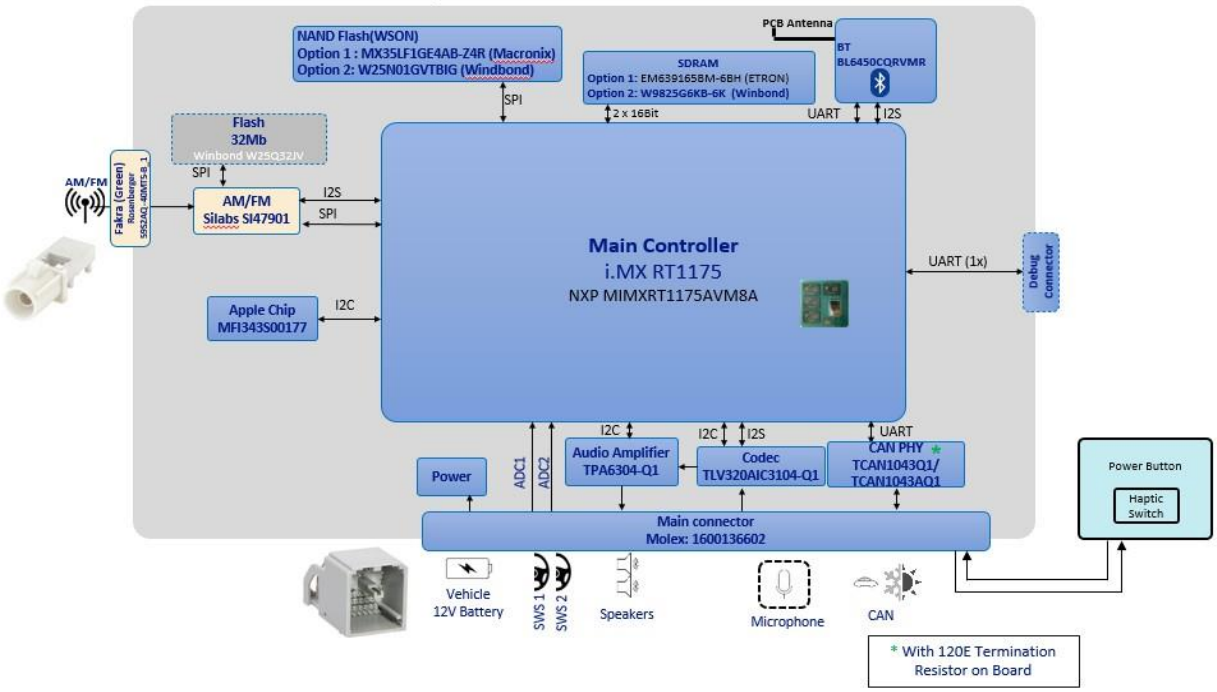

Created by: LOISILLIER Arthur	Reference FCE-2021-0223	Title PSA SPS Datasheet	
Revised by: Akshay Malpani	Date 2022-11-22	Edition N°: 1.7	Status Completed

3.2.5 Assumptions and notes

Tuner: Variant tuner will support AM/FM only.

Product features can be supported to future expansion **without changing** the PCB layout or footprint:
- Flash Memory upgrade up to 1GB

Product features can be updated to support future expansion **by changing** the PCB layout or footprint:
- MCU
- Tuner Module.

3.3 PCB BOARD STACK UP

Below is the board stack up for SPS _ 6 layers and 1.6 mm thickness.

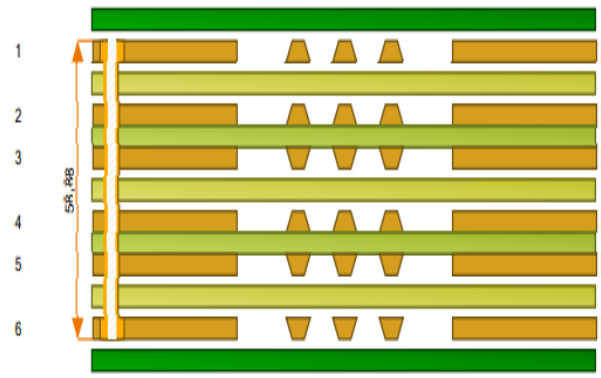

Supplier	Supplier Description	Description	Type	Base Thickness	Finish Thickness	εr	Processed Thickness
Polar Samples	SM/001	Liquid Photoimageable Mask	SolderMask			4,000	1,000
Jiexing		Cu - Ext. Fin. 0.5OZ	Copper	1,730	2,430		2,430
Shengyi	S1000HB	2116	Dielectric	4,724	4,252	4,300	4,252
				0,472	0,472		0,472
Shengyi	S1000	2X7628+2116	Core	19,685	19,685	4,690	19,685
				0,472	0,472		0,472
Shengyi	S1000HB	2116	Dielectric	4,724	4,252	4,300	4,252
				0,472	0,472		0,472
Shengyi	S1000	2X7628+2116	Core	19,685	19,685	4,690	19,685
				0,472	0,472		0,472
Shengyi	S1000HB	2116	Dielectric	4,724	4,252	4,300	4,252
Jiexing		Cu - Ext. Fin. 0.5OZ	Copper	1,730	2,430		2,430
Polar Samples	SM/001	Liquid Photoimageable Mask	SolderMask			4,000	1,000

Copper Thickness = 6,750 | Dielectric Thickness = 52,126 | Solder Mask Thickness = 2,000 |
Stack Up Thickness = 58,876 | Stack Up Thickness with Soldermask = 60,876

Created by: LOISILLIER Arthur	Reference FCE-2021-0223	Title PSA SPS Datasheet	
Revised by: Akshay Malpani	Date 2022-11-22	Edition N°: 1.7	Status Completed

4 ELECTRICAL CHARACTERISTICS

4.1 POWER SUPPLY

Nominal Range

NO.	Parameter	Value
1	Rated voltage	12V Typical
2	Operating voltage	9V to 16V
3	Calibration/Test voltage	13.5V +/- 0.5V
4	Operating temperature (without de-rating)	-40°C ~ +85°C
5	Storage temperature	-40°C ~ +85°C
6	Max. Operating current	Up to 7 A (To be finalized during development)
7	Dark current	To be finalized during development
8	Full sleep	≤ 0.2 mA (To be finalized during development)

4.2 MAIN COMPONENTS

Component	Feature	Manufacturer	Qty	Class
MCU	MIMXRT1175AVM8A	NXP	1	Class A
Bluetooth module	BL6450CQRVMR	Texas Instruments	1	Class A
Amplifier	TPA6304QDDVRQ1	Texas Instruments	1	Class A
Audio Codec	TLV320AIC3104-Q1	Texas Instruments	1	Class A
CAN	TCAN1043DMTRQ1	Texas Instruments	1	Class A
Tuner AM/FM	SI47901A2GE1AM	Skyworks	1	Class A
SDRAM	EM639165BM-6BH	ETRON	1	Class A
Flash memory	MX35LF1GE4AB-Z4R	Macronix	1	Class A

Created by: LOISILLIER Arthur	Reference FCE-2021-0223	Title PSA SPS Datasheet	
Revised by: Akshay Malpani	Date 2022-11-22	Edition N°: 1.7	Status Completed

If during project on SPS, it appears that too much memory has been considered, FCE keeps the right to reduce the amount of memory to keep cost.
Main component might/will change during development if required.

4.2.1 **MCU**

Item	**Spec (MIMXRT1175AVM8A)**
Supplier Name	NXP
Core Supply input Voltage	1.1V
Power for PLL, OSC, and LDOs	1.8V
Power for LPSR domain	3.3V
Power for USB OTG PHYs	NA
Power for ADC, DAC, and ACMP	1.8V / 3.3V
GPIO Supplied	1.8V / 3.3V
Junction Temperature	125°C
Core	Dual Core (Arm Cortex-M7 , Arm Cortex®-M4)
RAM	2MB on chip RAM
ROM	Boot ROM of 256KB
External Memory Interface	• SDRAM • NAND FLASH
Connectivity	• CAN FD • I2C module • SPI module • UARTs module • ADC • DAC • I2S

Created by: LOISILLIER Arthur	Reference FCE-2021-0223	Title PSA SPS Datasheet	
Revised by: Akshay Malpani	Date 2022-11-22	Edition N°: 1.7	Status Completed

4.2.2 **Bluetooth**

Item	Spec BL6450CQRVMR
Supplier Name	Texas Instruments
Supply Voltage	4.2 V (max)
I/O Power Supply Voltage	1.8V
Frequency Range	2402 MHz – 2480MHz
Channel Spacing	79 Channels with 1MHz Spacing
Max EIRP	7.05 dbm
BT Antenna Gain	3.3 dBi
BT version	Version 5.1
Operating Temperature	-40°C to 85°C
Metadata	Yes
BT features	• Seamless Integration with TI Jacinto 6 and Other Application Processors • Secure connections (BR/EDR) • Improved Bluetooth Link Robustness: Supports Power Level of Bluetooth Class-2 With Increased Output Power Capabilities • Advanced Power Management for Extended Battery Life and Ease of Design

4.2.3 **Audio Amplifier**

Item	Audio Amplifier (TPA6304QDDVRQ1)
Supplier Name	Texas Instruments
Supply Voltage (PVDD, VBAT)	30V (max)
Junction Temperature	160°C
Number of speaker interface	2
Output Power capacity	2x20 W

Created by: LOISILLIER Arthur	Reference FCE-2021-0223	Title PSA SPS Datasheet	
Revised by: Akshay Malpani	Date 2022-11-22	Edition N°: 1.7	Status Completed

Protection	• 40 V Load dump • Output short protection • DC offset and over temperature • Fortuitous open ground and power tolerant
Operating Voltage Range	4.5V to 18V
THD	27 W, 10% THD into 4 Ω at 14.4 V
Output Noise	42 µVRMS Output Noise
ESD (Human Body Model - HBM) (Charge Device Model – CDM)	±2000 V ±750 V

4.2.4 **Audio Codec**

Item	**Spec (TLV320AIC3104-Q1)**
Supplier Name	Texas Instrument
Interface	MIC input and DAC output, MIC not included to be provided by Stellantis
Supply Voltage – Analog	3.3V
Supply Voltage – Digital	1.8V
Supply Voltage-Digital I/O	1.8V
Operating Temperature	-40 to 85°C
Host Interface	I2S, I2C
ADC input characteristics:	
Signal to noise ratio	92-dBA
THD	-75 dB
Sampling Rate	Up to 96 kHz
DAC Input characteristics:	
Signal to noise ratio	102-dBA
THD	-75 dB
Sampling Rate	Up to 96 kHz

Created by: LOISILLIER Arthur	Reference FCE-2021-0223	Title PSA SPS Datasheet	
Revised by: Akshay Malpani	Date 2022-11-22	Edition N°: 1.7	Status Completed

4.2.5 CAN Transceiver

Item	Spec TCAN1043DMTRQ1
Supplier	Texas Instrument
Supply Voltage (Vcc)	5.5V (max)
Supply Voltage (Vio)	5.5V (max)
Junction Temperature	165°C
Protection features	• ESD protection • Undervoltage protection • Thermal shutdown protection (TSD)
Data Rate	Up to 8 Mbit/s
Operating Modes	• Normal Mode • Standby Mode • Wake up • Low Power sleep Mode
Controller interface	3.3V or 5V direct interface
Wake up and Sleep mode	Yes, local and remote wake-up
Operating Voltage range	4.5V to 40V

4.2.6 Radio Tuner

Item	Spec (SI47901A2GE1AM)
Supplier	Skyworks
Supply Voltage Analog (VA)	3.3V (typ)
Supply Voltage Digital (VD)	1.8V (typ)
Interface Supply (IO)	1.8V/3.3V
Operating Temperature	-40°C to 85°C
Frequency Range	AM : 530 – 1710 kHz
	FM : 76 – 108 MHz

Created by: LOISILLIER Arthur	Reference FCE-2021-0223	Title PSA SPS Datasheet	
Revised by: Akshay Malpani	Date 2022-11-22	Edition N°: 1.7	Status Completed

Frequency Step Resolution	AM : 10kHz
	FM : 200kHz
Tune time	FM :1 ms typ AM :15 ms typ
Output Impedance	50 ohms
Environment	Pb-Free/RoHS Compliant
FM: S/N Ratio	70 dB typ
FM: Sensitivity	-7 dBµV
AM: S/N Ratio	65 dB typ
AM: Sensitivity	26 dBuv
I/O Power supply	Vio+0.3 V max
Analog Power supply	3.3V
Host Interface	SPI, I2C

4.2.7 **SDRAM**

Item	**Spec (EM639165BM-6BH)**
Supplier	Etron
Memory	128Mbit(16MByte)
Supply Voltage	3.3 V (typ)
Supply Voltage (for I/O buffer)	3.3 V (typ)
Power Dissipation	1 W
Operating Temperature	-40 to 105°C max
AEC qualified	YES
Interface	LVTTL
Data length	16 Bit
Address	12 Bit
Clock frequency	166 Hz

Created by: LOISILLIER Arthur	Reference FCE-2021-0223	Title PSA SPS Datasheet	
Revised by: Akshay Malpani	Date 2022-11-22	Edition N°: 1.7	Status Completed

4.2.8 Flash Memory

Item	Spec (MX35LF1GE4AB-Z4)
Supplier	Macronix
Density	1 Gb
Supply Voltage	3.3V (typ)
Page size	(2048+64) byte
Block size	(128K+4K) byte
Operating Temperature	-40 to 85°C
ESD protection	>2000 V
Frequency	104 MHz
Page program time	300 us
Block erase time	1 ms
Package	8-WSON

4.3 CONNECTORS AND INTERFACES

4.3.1 Overview

Following is the representation of the silver Box connector, Actual Image may vary as per Mechanical development.
We are using 6 Layer, FR4 PCB.

Created by: LOISILLIER Arthur	Reference FCE-2021-0223	Title PSA SPS Datasheet	
Revised by: Akshay Malpani	Date 2022-11-22	Edition N°: 1.7	Status Completed

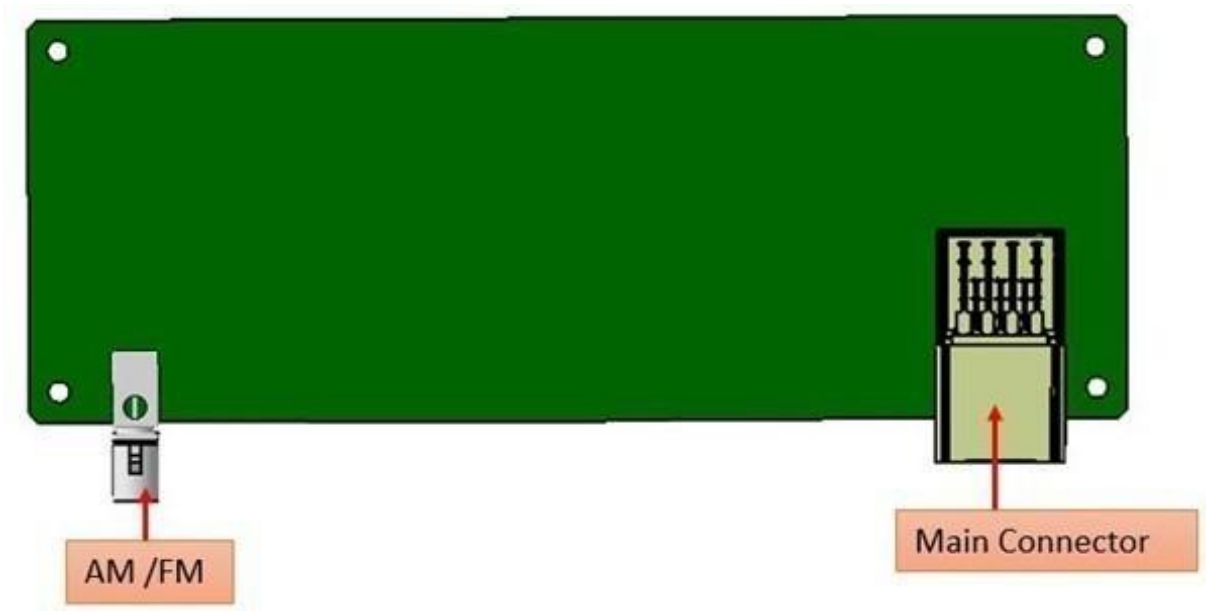

Created by: LOISILLIER Arthur	Reference FCE-2021-0223	Title PSA SPS Datasheet	
Revised by: Akshay Malpani	Date 2022-11-22	Edition N°: 1.7	Status Completed

4.3.2 Main Connector Interface

Pin	Symbol	Description	Connector
1	SPKR_RIGHT1-	Speaker signal	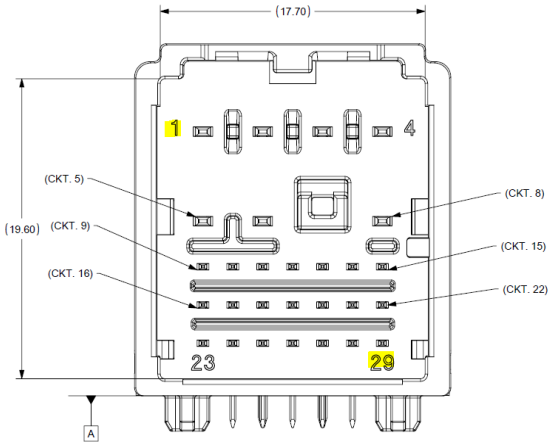 Molex part no 1600136602 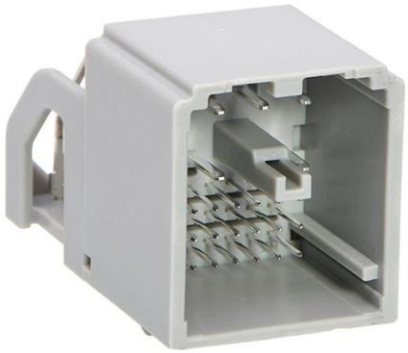
2	SPKR_RIGHT1+	Speaker signal	
3	SPKR_LEFT1-	Speaker signal	
4	SPKR_LEFT1+	Speaker signal	
5	GND	Ground	
6	NC	NC	
7	TAB:NoElectrical Interface	Mechanical Alignment Tab	
8	VBAT	Power signal	
9	NC	-	
10	NC	-	
11	MIC_IN+	MIC signal	
12	MIC_IN-	MIC signal	
13	NC	Wire connection not required in Vehicle harness	
14	NC	-	
15	NC	Wire Connection not required in Vehicle Harness	
16	NC	Wire Connection not required in Vehicle Harness	
17	GND	KSW Ground	
18	CAN_BUS_H	Communication	
19	CAN_BUS_L	Communication	
20	KSW_IN	Power	
21	NC	-	
22	GND	SWC Ground	
23	SWS_ROCKER	Signal	
24	SWS_TOGGLE	Signal	
25	GND	Ground	

Created by: LOISILLIER Arthur	Reference FCE-2021-0223	Title PSA SPS Datasheet	
Revised by: Akshay Malpani	Date 2022-11-22	Edition N°: 1.7	Status Completed

26	NC	NC	
27	NC	NC	
28	NC	NC	
29	NC	NC	

4.3.3 **Tuner Interface**

Device Side Connector	
Make:	Rosenberger
Part No:	59S2AQ-40MT5-B_1

Device	Function	Type
1	Tuner FMB	Communication
M1	GND	Ground
M2	GND	Ground
M3	GND	Ground
M4	GND	Ground

*DAB is not applicable in below table

Created by: LOISILLIER Arthur	Reference FCE-2021-0223	Title PSA SPS Datasheet	
Revised by: Akshay Malpani	Date 2022-11-22	Edition N°: 1.7	Status Completed

Voltage	AM/FM	DAB	Supply voltage supplied by the car radio or the telematic box
Umin (V)	8	8	Minimum voltage
Unom (V)	13,5	13,5	Usual voltage
Umax (V)	16	16	Maximum voltage

RFQ TS Requirement	Active antenna
Antenna length	280+/-5mm
Radius of antenna tip	R3.3
AM/FM Frequency range	AM : 148.5-283.5 & 531-1705KHz
	FM : 88-108MHz
VSWR	Less than 3
Impedance of Antenna	FM/DAB : 50 Ohm
	AM : >300 Ohm
Antenna Polarization	Horizontal & Vertical Pol
Vibration	As per OE std
Rust protection	Yes

For a supply voltage between 8V and 16V, the current consumption of the broadcast antenna system shall be between :

- 8 mA to 80 mA for AM and FM
- 10 mA to 6 0mA for DAB

Created by: LOISILLIER Arthur	Reference FCE-2021-0223	Title PSA SPS Datasheet	
Revised by: Akshay Malpani	Date 2022-11-22	Edition N°: 1.7	Status Completed

4.3.4 **SWC Interface**

SPS silverbox support hardware resistive ladder for steering wheel switch
R -ladder is powered by 5V

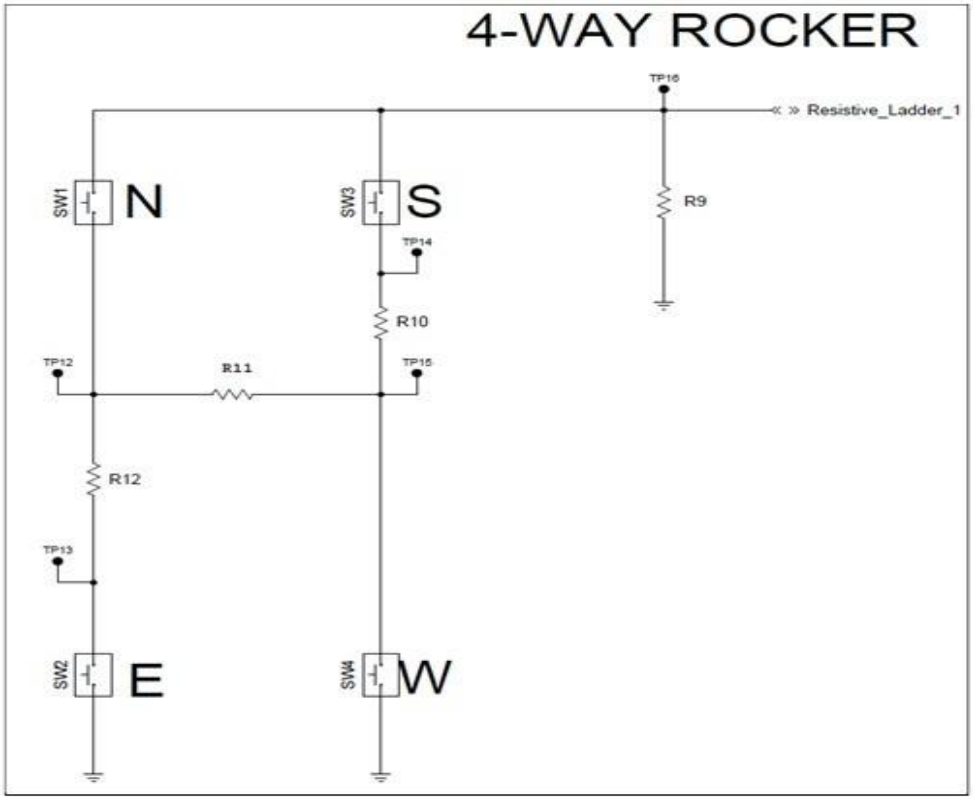

Created by: LOISILLIER Arthur	Reference FCE-2021-0223	Title PSA SPS Datasheet	
Revised by: Akshay Malpani	Date 2022-11-22	Edition N°: 1.7	Status Completed

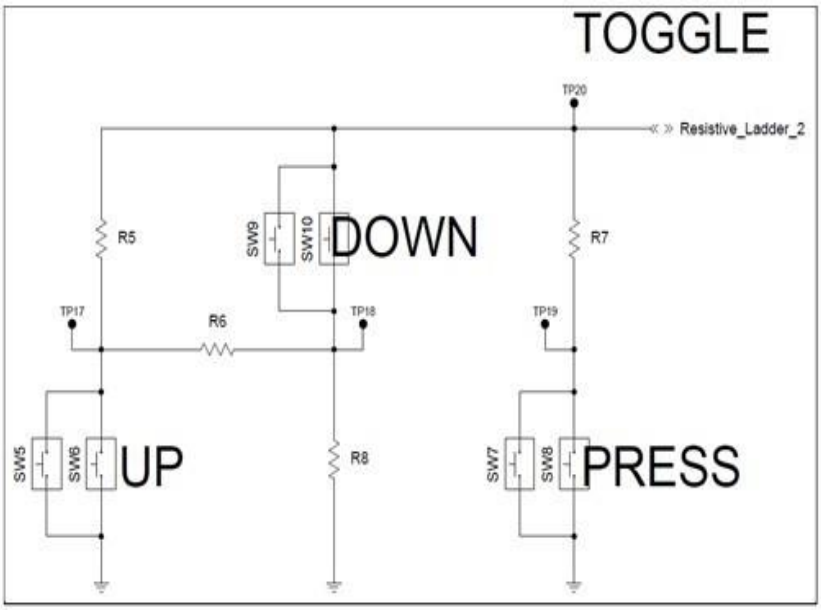

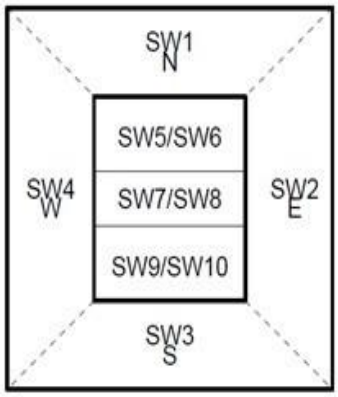

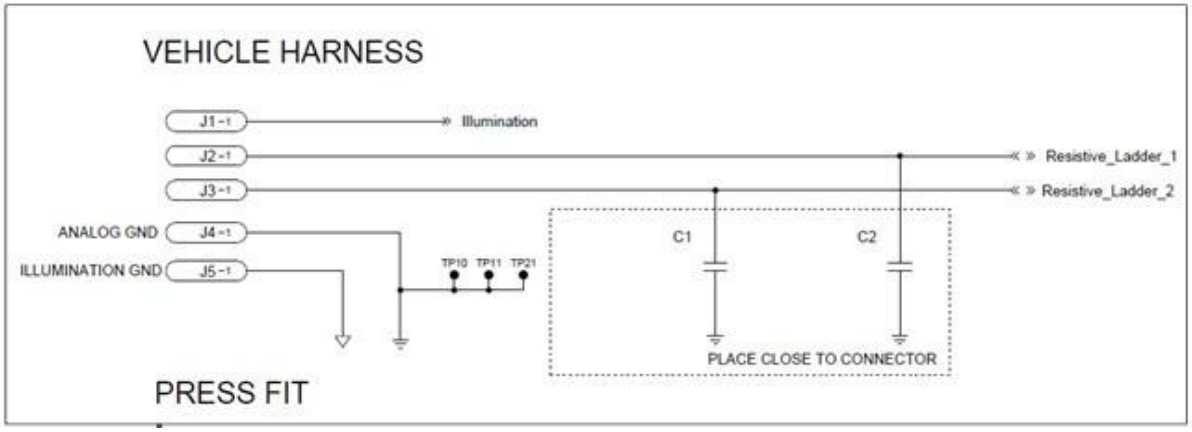

Created by: LOISILLIER Arthur	Reference FCE-2021-0223	Title PSA SPS Datasheet	
Revised by: Akshay Malpani	Date 2022-11-22	Edition N°: 1.7	Status Completed

#	Description	REFDES	Value	Parameters
1	Resistor	R7	475 R	0402, 1%
2	Resistor	R10	2k21	0402, 1%
3	Resistor	R5	2k0	0402, 1%
4	Resistor	R12	4k99	0402, 1%
5	Resistor	R8	5k11	0402, 1%
6	Resistor	R11	6k98	0402, 0.1%
7	Resistor	R6	9k09	0402, 1%
8	Resistor	R9	30k1	0402, 1%
9	TERMINAL	J2,J3,J4	--	--
10	Capacitor	C1,C2	100n	0603, 50 V, 10%

4.3.5 **Button Interface**

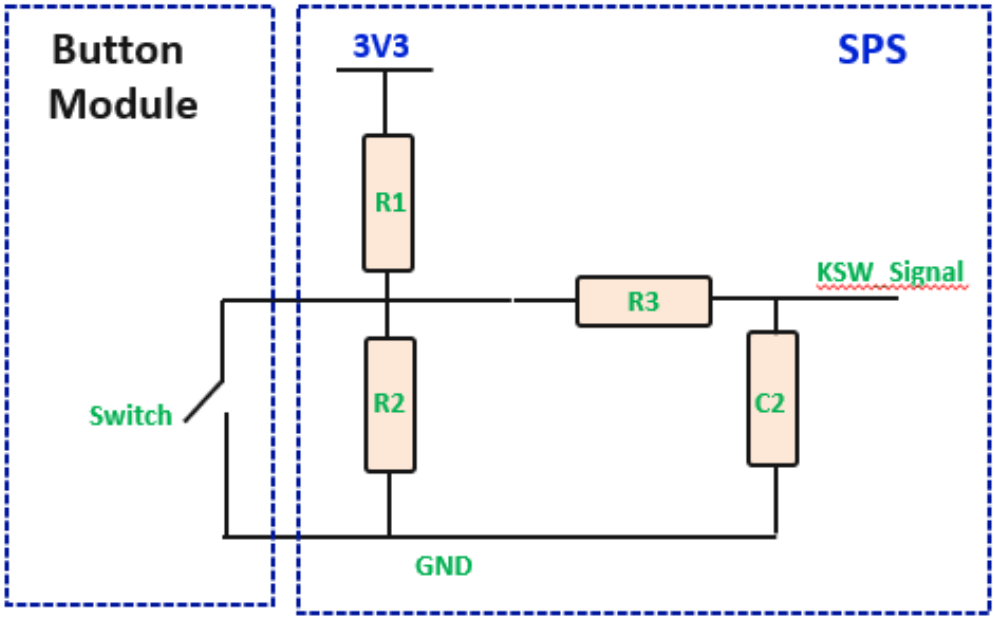

Created by: LOISILLIER Arthur	Reference FCE-2021-0223	Title PSA SPS Datasheet	
Revised by: Akshay Malpani	Date 2022-11-22	Edition N°: 1.7	Status Completed

4.3.6 Mic Interface:

s.no	Section in RFQ	Parameters	Proposal
1	1.6.3.1 Primary Function:	Type of Microphone	Active microphone
2	Electrical Specification	Operating Temperature	-40 ~ +85 °C
3		Storage Temperature	-40 ~ +90 °C
4		operating Voltage	8 V±10 %
5		current consumption	4.5 mA (Min), 6 mA (Typ), 13 mA (Max) at 8 V 1.95 mA (Typ) at 5 V
6	2.5.1 Specifications of Microphone:	Frequency Response	Refer image aside
7		Microphone Dimension	
8		Bezel Dimension	
9		Driectionality of Array	Omni-Directional
10		Sensitivity	-10.45±3 dB (at 1 kHz 94 dBSPL)
11		Environmental Protection Regulation	
12		Signal to Noise ratio	65 dB (Min) at 1 kHz 8 V, TmoyEF, TmaxEF, TminEF
13		Total Harmonic Distortion	3 % (Max) at 110 dBSPL 300 Hz, 500 Hz, 1 kHz, 2 kHz, 4 kHz 8 V, TmoyEF, TmaxEF, TminEF
			1 % (Max) at 106 dBSPL 300 Hz, 500 Hz, 1 kHz, 2 kHz, 4 kHz 8 V, TmoyEF, TmaxEF, TminEF
			3 % (Max) at 100 dBSPL 300 Hz, 500 Hz, 1 kHz, 2 kHz, 4 kHz 5 V, TmoyEF, TmaxEF, TminEF
14		Andriod Auto/ Apple car play certified	
15		Impedance	130Ω (Maximum)
16		Directivity	Omni-Directional
17		self noise	-72 dB (Max) 8 V, TmoyEF, TmaxEF, TminEF
18		Target Weight	6.5 g (Max)
19		Maximum sound pressure level	
20		Wide Band	Refer frequency response

Created by: LOISILLIER Arthur	Reference FCE-2021-0223	Title PSA SPS Datasheet	
Revised by: Akshay Malpani	Date 2022-11-22	Edition N°: 1.7	Status Completed

In case ATB is not present in vehicle, the entire power output will be from SPS and should be

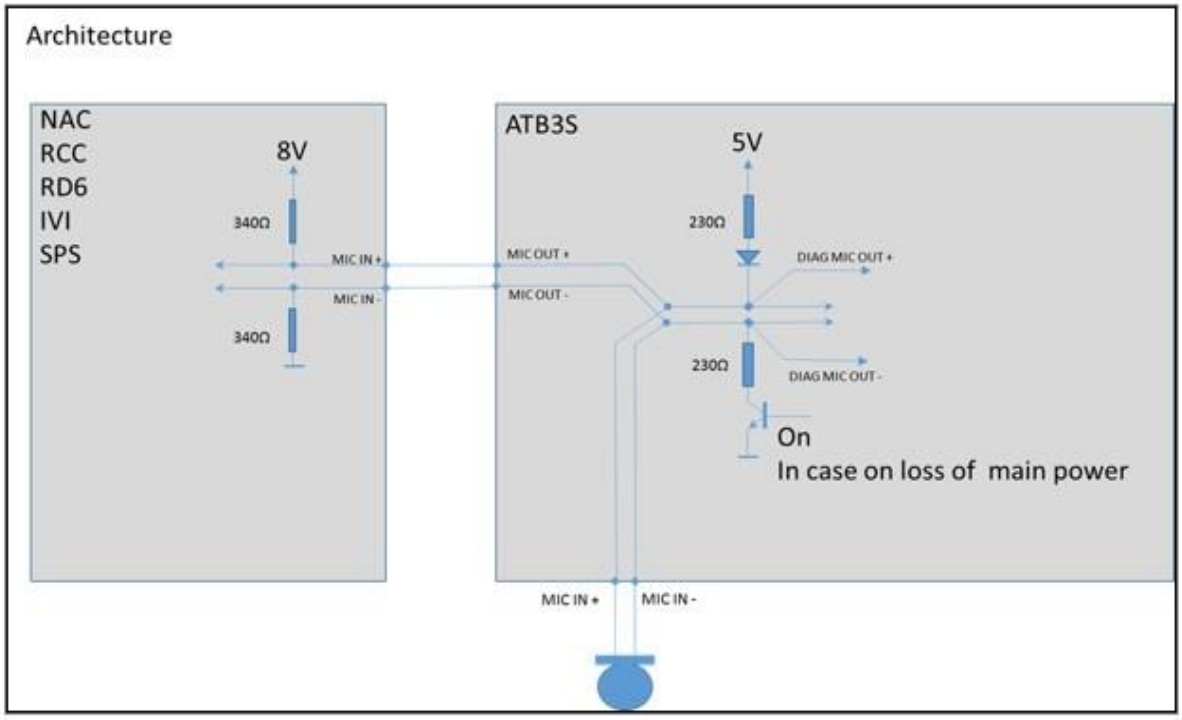

within SPS.

Frequency Response

Created by: LOISILLIER Arthur	Reference FCE-2021-0223	Title PSA SPS Datasheet	
Revised by: Akshay Malpani	Date 2022-11-22	Edition N°: 1.7	Status Completed

N°Requirement	Content of the Requirement
REQ-0507977 A GEN-2023-MICROPHONE-CD-PERF-0001(0) Owner : e489507 Grade: Flexibility : Mandatory	The microphone frequency response shall respect ITU P1110 and shall be in the template below: The limits for intermediate frequencies lie on a straight line drawn between the given values on a linear (dB) logarithmic (Hz) scale. All sensitivity values are expressed in dB on a arbitrary scale. frequency / upper limit / lower limit 100 / -17 / -24 200 / 3 / -3 1000 / 3 / -3 6000 / 3 / -3 8000 / 3 / -3 10000 / 3 / -6 Measurements are made in accordance with the standards CEI 60268-1 [R2], CEI 60268-4 [R3], ITU1110 [R4]

Physical disconnection of 340 Ohm must be possible

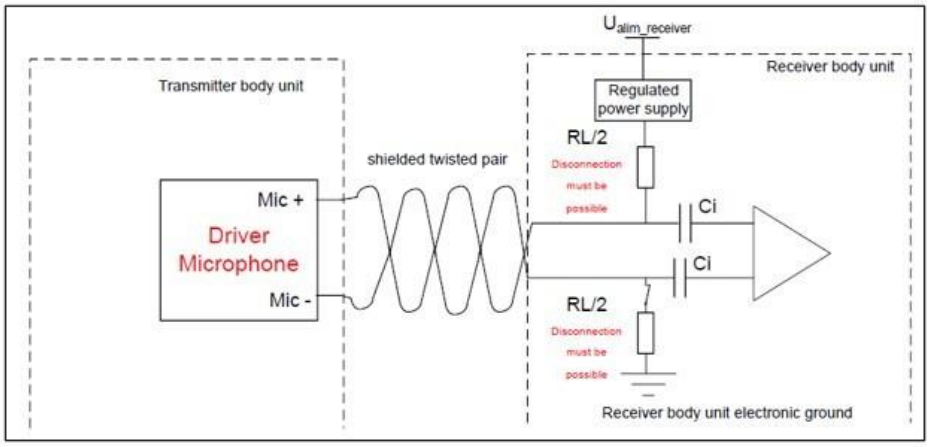

Created by: LOISILLIER Arthur	Reference FCE-2021-0223	Title PSA SPS Datasheet	
Revised by: Akshay Malpani	Date 2022-11-22	Edition N°: 1.7	Status Completed

4.3.7 Speaker Interface

Section in RFQ	RFQ TS Requirement	Remarks
Speaker Specification	Type of speakers	Full Range
	Size	6.1 inch
	Rated power	25 Watts
	Peak power	40 Watts
	Frequency Response	70 - 15KHz
	Resonance Frequency	70± 14 Hz
	THD	4% at 5 Watt
	Speaker Impedance	4.0 Ω ± 0.6 Ω at (400 Hz)
	Sound Pressure level	86 dB ± 2 dB (@ 300,400,500,600 Hz)
	Frequency Range	20 Hz to 20 KHz
	Average Sensitivity	89 +/- 2 dB
	D. C Resistance	3.52
	Equivalent volume of air (Vas)	8.38
	Mechanical Q (Qms)	3.28
	Total (Qts)	0.85
	Electrical Q (Qes)	1.15
	Driver Magnet Type	Nd- Fe-B,FP/FE/Zn5/ CM2
	Buzz and Rattile test voltage	10V

Created by: LOISILLIER Arthur	Reference FCE-2021-0223	Title PSA SPS Datasheet	
Revised by: Akshay Malpani	Date 2022-11-22	Edition N°: 1.7	Status Completed

5 MECHANICAL

5.1 2D VIEW

Silver BOX:

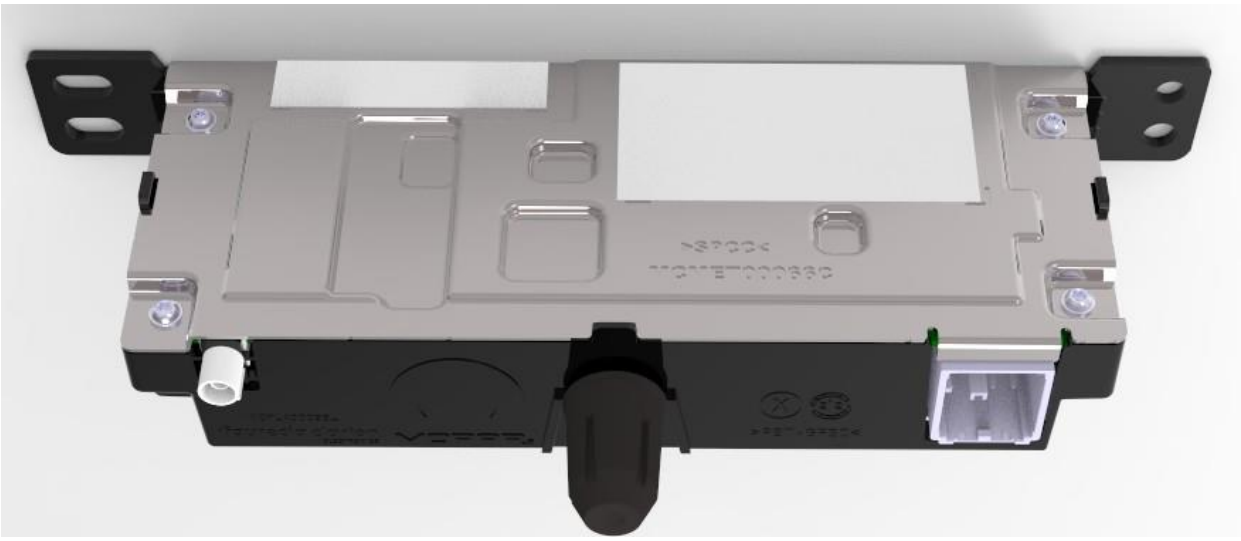

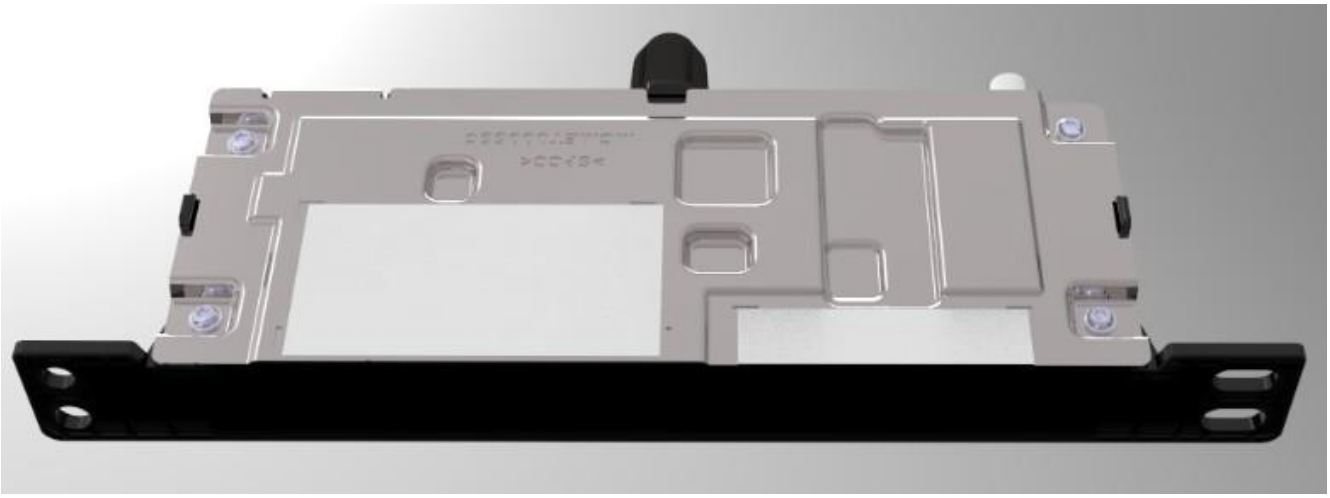

Created by: LOISILLIER Arthur	Reference FCE-2021-0223	Title PSA SPS Datasheet	
Revised by: Akshay Malpani	Date 2022-11-22	Edition N°: 1.7	Status Completed

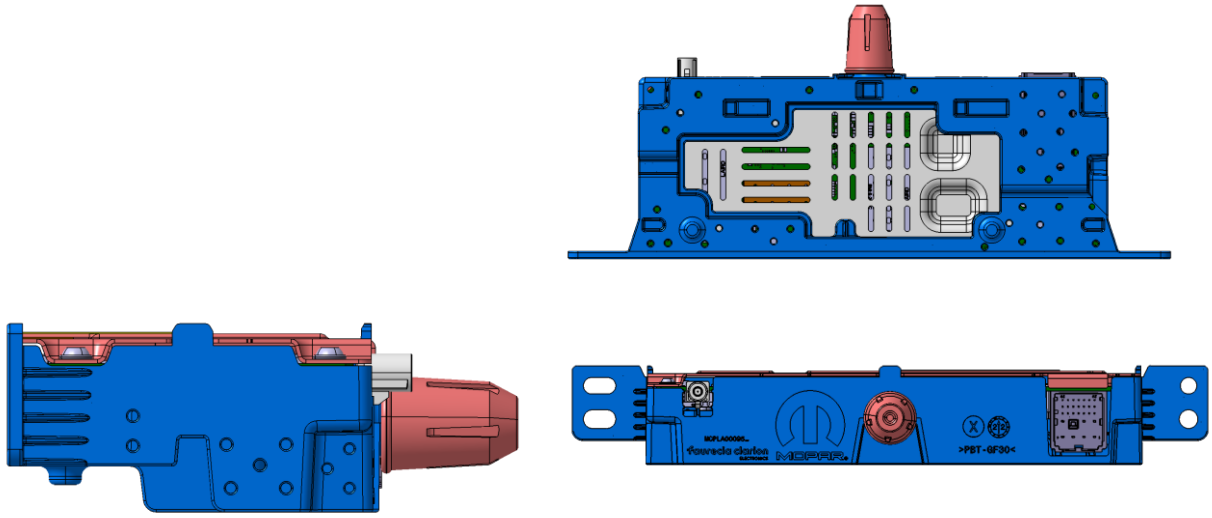

5.2 3D VIEW

Silver BOX:

Created by: LOISILLIER Arthur	Reference FCE-2021-0223	Title PSA SPS Datasheet	
Revised by: Akshay Malpani	Date 2022-11-22	Edition N°: 1.7	Status Completed

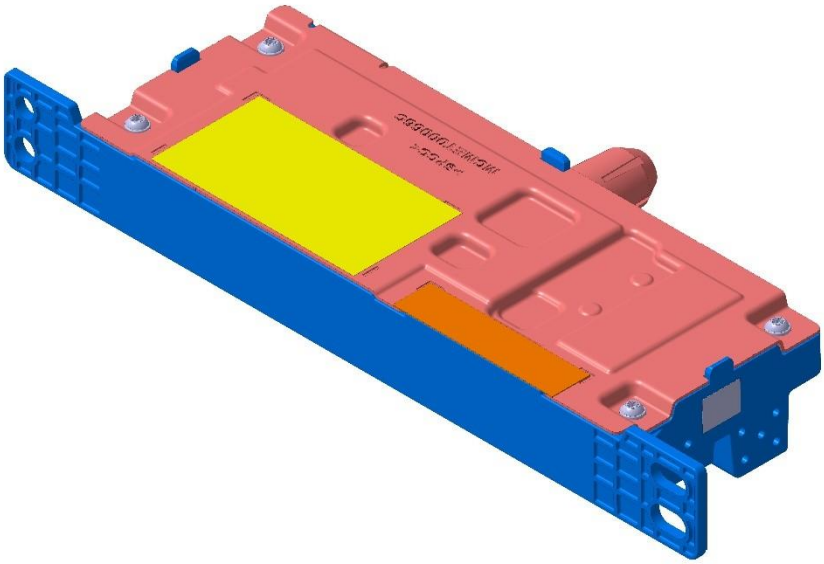

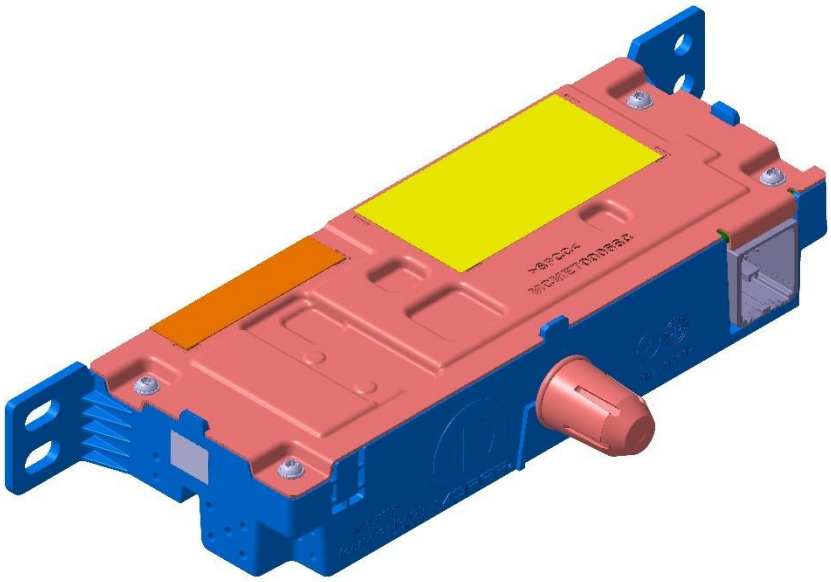

Created by: LOISILLIER Arthur	Reference FCE-2021-0223	Title PSA SPS Datasheet	
Revised by: Akshay Malpani	Date 2022-11-22	Edition N°: 1.7	Status Completed

5.3 EXPLODED VIEW

Silver Box:

No.	PART NAME	QTY
1	SPS - PLASTIC CASING - MOLDED	1
2	SPS - HEATSINK	1
3	SCREW_EJOT_4220586801	8
4	PCBA_SPS_MB_A_B1400_HW03	1
5	SPS - TIM	7
6	SPS - TOP COVER	1
7	SPS - LABEL	1
8	SPS - ANTENNA STICKER	1
9	LOCATING PIN	1
10	SPS - TRACEABILITY LABEL SMALL	1
11	SPS - HYBRID SHEET (L44xW10xThk2)	1
12	SPS - HYBRID SHEET (L16.2xW16.2xThk1)	1

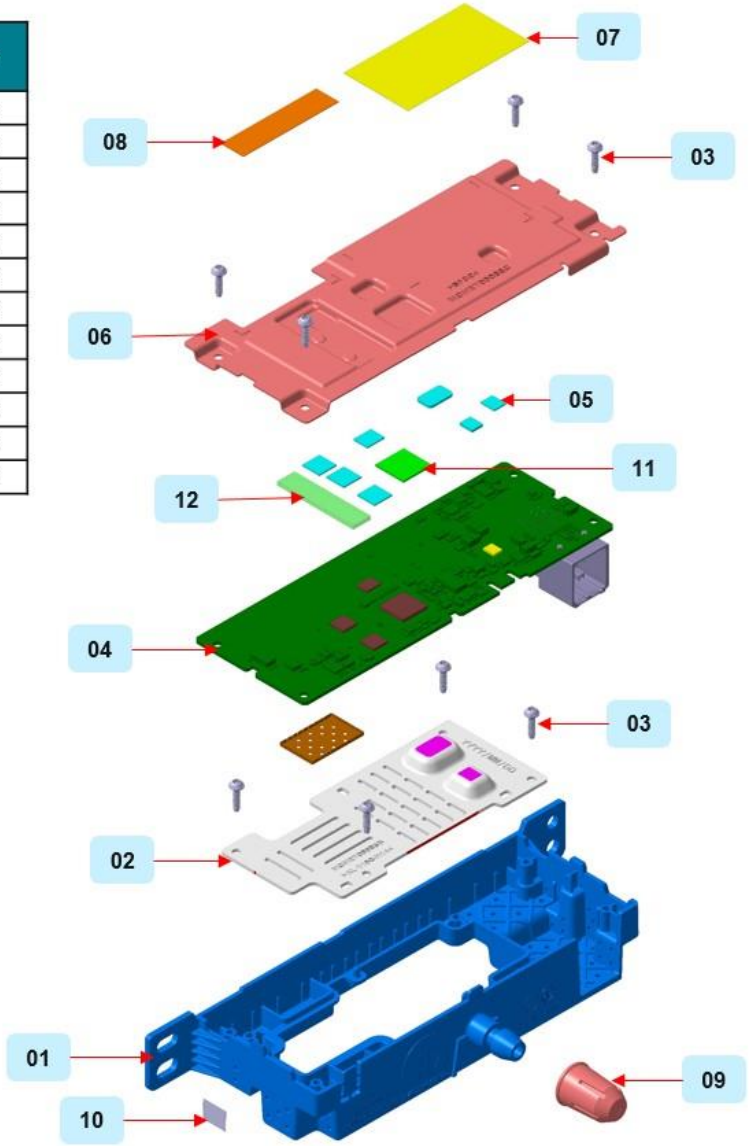

Created by: LOISILLIER Arthur	Reference FCE-2021-0223	Title PSA SPS Datasheet	
Revised by: Akshay Malpani	Date 2022-11-22	Edition N°: 1.7	Status Completed

5.4 MECHANICAL SPECIFICATION

Silver Box:

Type	Material	Weight
Silver Box housing	PBT GF-30, Celanese 3300-2	FCE can achieve silver box weight less than 500 grams
Silver Box top cover	Steel SECC (Cold roll steel)	
Silver Box Host heatsink	AL 1100-H14	

Created by: LOISILLIER Arthur	Reference FCE-2021-0223	Title PSA SPS Datasheet	
Revised by: Akshay Malpani	Date 2022-11-22	Edition N°: 1.7	Status Completed

6 SOFTWARE

6.1 ARCHITECTURE

6.1.1 Architecture - with tuner Variant

Created by: LOISILLIER Arthur	Reference FCE-2021-0223	Title PSA SPS Datasheet	
Revised by: Akshay Malpani	Date 2022-11-22	Edition N°: 1.7	Status Completed

6.1.2 Architecture - without tuner Variant

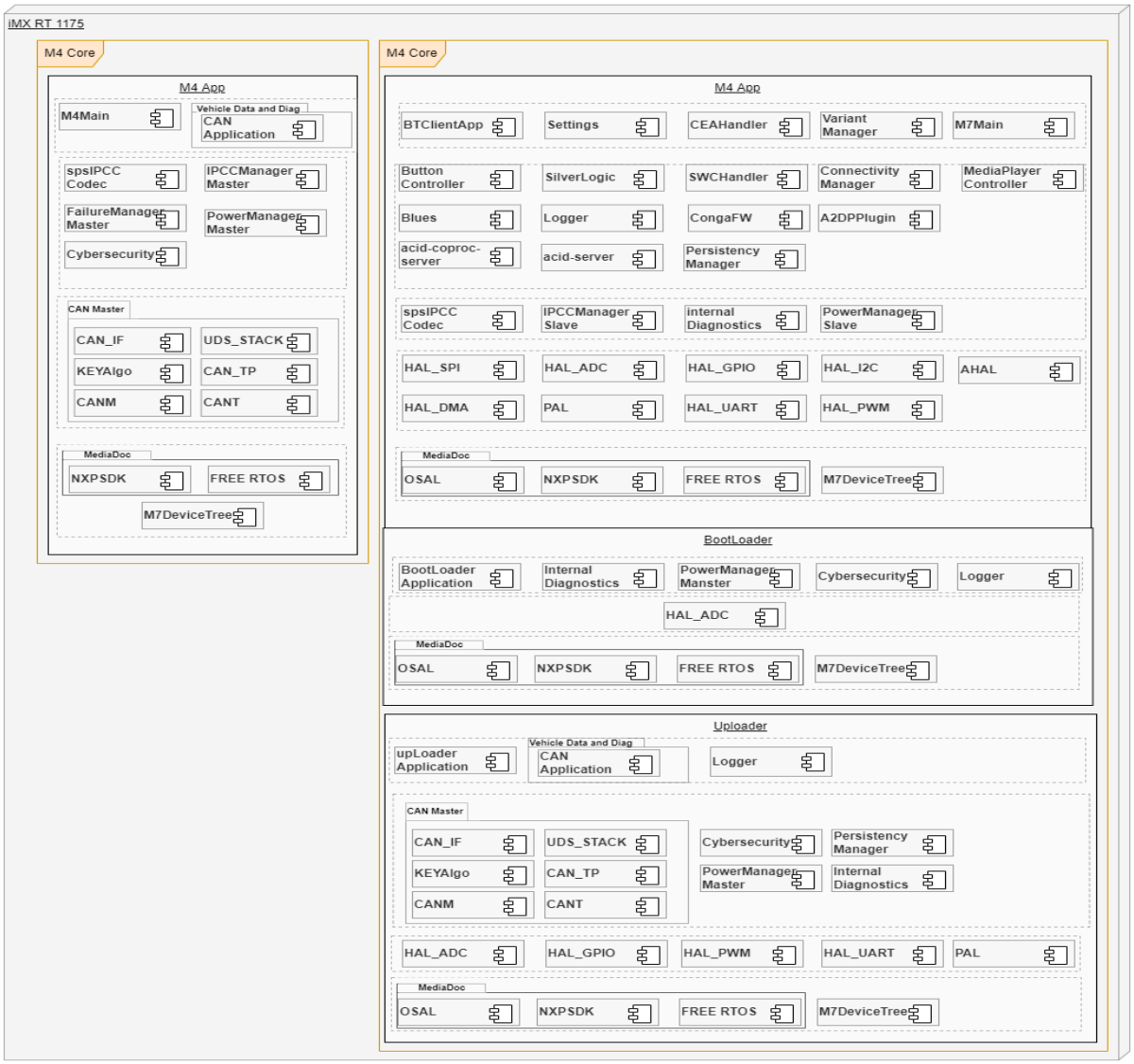

Created by: LOISILLIER Arthur	Reference FCE-2021-0223	Title PSA SPS Datasheet	
Revised by: Akshay Malpani	Date 2022-11-22	Edition N°: 1.7	Status Completed

6.1.3 Applications

6.1.3.1 SWC

Functionality as per SWC SRS

- SWC is used to handle all the steering wheel controls via wired interface with SPS silverbox

6.1.3.2 Tuner (Variant)

Functionality as per Tuner SRS

- Interacts with Smartphone application over Bluetooth for AM/FM

6.1.3.3 Control for Volume:

- With respect to source auto scaling for volume level.
- Volume levels stored in persistent memory WRT to IGN cycle.

6.1.3.4 Voice Recognition

- Starts voice recognition when requested from VR switch through SWC.
- Interacts with Bluetooth manager to start voice recognition on smartphone
- Interacts with audio manager to access microphone and speakers

6.1.3.5 Media Player

- Manage media source switching between AM/FM/BT Audio.
- Interacts with Media Player manager to play media from the requested source.

6.1.3.6 Vehicle Data

- Interacts with CAN Bus to get vehicle data.

6.1.3.7 Power Mode

- Implements the system power mode
- Based on CAN signal, switches between system power modes to handles SPS functions

6.1.3.8 Telephony

- Handles phone calls from Smartphone application in HFP mode over Bluetooth
- Handles phone related data
- Handles action on phone call e.g.call accept/ reject
- Uses Bluetooth Manager for the phone call in HFP mode
- Uses Audio Manager to access car's microphone and speaker

Created by: LOISILLIER Arthur	Reference FCE-2021-0223	Title PSA SPS Datasheet	
Revised by: Akshay Malpani	Date 2022-11-22	Edition N°: 1.7	Status Completed

- Uses SWC to perform action on incoming call

6.1.4 Middleware & services

6.1.4.1 Audio Manager

- Provides low level implementation for Audio data
- Handles ECNR
- Handles audio sources and their volume levels
- Handles audio settings
- Process microphone data
- Stores volume level for each source
- Used by Media player (option), Telephony, Tuner and VR

6.1.4.2 Health Monitor

- Monitors functional module hang or not responding
- Provides reset if module doesn't recover within a time limit
- There may be more enhancement and design change during development and will be added

6.1.4.3 I/O Manager

- Handles input and output through GPIO pins
- Handles ADC lines
- Used by SWC

6.1.4.4 Bluetooth Handler

- Implements Bluetooth functions and profiles HFP, A2DP, AVRCP, SPP, iAP2.
- Handles request to pair, unpair and auto pairing
- Provides centralized access to Bluetooth for multiple modules
- Used by Telephony, Bluetooth Audio, and communication with smartphone application
- Stores last 5 paired devices

6.1.4.5 Tuner Manger (Variant)

- Implements AM/ FM functions
- Handle request to change between AM/ FM
- Process data provided by AM/ FM
- Used by Tuner Application

Created by: LOISILLIER Arthur	Reference FCE-2021-0223	Title PSA SPS Datasheet	
Revised by: Akshay Malpani	Date 2022-11-22	Edition N°: 1.7	Status Completed

6.1.4.6 Media Manager

- Handles media playback via Bluetooth and Tuner
- Use Audio Manger for audio data

6.1.4.7 SW Update Manager

- SW update via CAN

6.1.4.8 CAN Manager

- Implements CAN functions
- Used to interact with vehicle data
- Used by SW update Manager

6.1.4.9 Diagnostic

- Implements diagnostic function
- Holds actual values of diagnostic data

6.1.4.10 Cybersecurity

- Implements the security features
- Provides secure boot, security data protection, authentication
- Used by bootloader, SW update
- Crypto work in association with CAAM module of IMXRT1175

6.1.5 BSP (Board support Package)

This will be provided by NXP, it contains CMSIS core drivers and middleware and freeRTOS kernel to build an application.

6.2 OPERATING SYSTEM

6.2.1 Free RTOS

Free RTOS is real time operating system kernel for embedded devices. It provides methods for multiple tasks, mutexes, semaphore and software timers. A tick-less mode is provided for the low power applications.

- **Free RTOS Features:**

Created by: LOISILLIER Arthur	Reference FCE-2021-0223	Title PSA SPS Datasheet	
Revised by: Akshay Malpani	Date 2022-11-22	Edition N°: 1.7	Status Completed

- Pre-emptive or co-operative operation
- Very flexible task priority assignment
- Flexible, fast and light weight task notification mechanism
- Queues
- Binary semaphores
- Counting semaphores
- Mutexes
- Recursive Mutexes
- Software timers
- Event groups
- Tick hook functions
- Idle hook functions
- Stack overflow checking
- Trace recording
- Software managed interrupt stack when appropriate (this can help save RAM)

6.3 SW FEATURES

6.3.1 Pass-Through VR

- BT based Pass through VR is supported irrespective of mobile OS (Android or Apple).

6.3.2 Bluetooth

6.3.2.1 Profiles

BT Profiles	Version
HFP	V1.8
A2DP (Audio)	V1.3.2
AVRCP	V1.6.2
SPP	V1.2

Created by: LOISILLIER Arthur	Reference FCE-2021-0223	Title PSA SPS Datasheet	
Revised by: Akshay Malpani	Date 2022-11-22	Edition N°: 1.7	Status Completed

iAP2	v2

6.3.2.2 BT Pairing Diagram (For Functionality through Silver Box only)

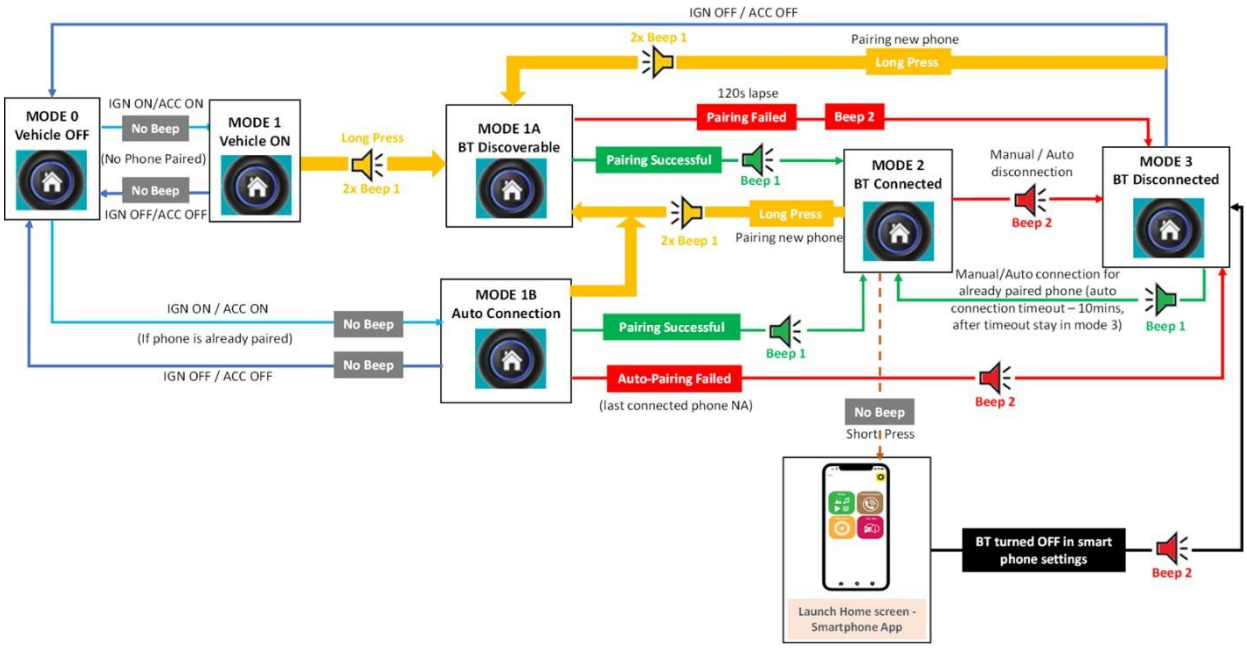

6.3.3 Audio

Feature	Specification
Type	BT Audio (Music & Telephony)
Speaker Audio	Yes
Speed sensing volume control	Yes
Volume control	Yes
Audio Tuning	Faurecia sound processing system

Created by: LOISILLIER Arthur	Reference FCE-2021-0223	Title PSA SPS Datasheet	
Revised by: Akshay Malpani	Date 2022-11-22	Edition N°: 1.7	Status Completed

6.3.4 CAN

Feature	Support
HS CAN	Yes, 500kbps
CAN Wake up & sleep	Yes
Audio Mute	Yes
SW update	Yes
Identifier	11 bit standard
Message Model	Periodic, Event Driven and mixed mode
CAN communication failure	DTC will be stored in error memory

6.3.5 Diagnostic – UDS

The ECU will support a range of diagnostic services (over CAN) as requested by PSA
The main input for this is the received CDD file.

Below is the list of services which will be supported by the ECU:

- Negative Response code & handling strategy
- Request/Response definition of services
- Pre-programming (as per requirements)
- Full/partial download
- ECU conditions in case of loss of power supply, Communication disruption
- Post Programming (as per requirements)
- Read/Clear DTCs
- Security Access
- Re-programming Sequence
- Services / Routine Identifiers
- Re-Programming during development/EOL/AS
- Configuration (Diversity Management), depending on the vehicle type

6.3.6 EC/NR

System will include FCE-E's Telephony IP for EC/NR

Created by: LOISILLIER Arthur	Reference FCE-2021-0223	Title PSA SPS Datasheet	
Revised by: Akshay Malpani	Date 2022-11-22	Edition N°: 1.7	Status Completed

Key features:

- 1 Microphone solution (SWB Microphone in vehicle)
- Supported voice qualities (8KHz, 16KHz)
- Echo Suppression >50dB
- Noise Reduction up to 25dB
- Residual echo suppression (in case of non-linearities)
- Easy chain definition: XML configuration file to instantiate (& parameterize) processing blocks for both Rx & Tx paths
- Filter storage at end of call & reload at next call => No initial echo
- Compliance to 1100 for NB & 1110 for WB
- Performance depends on the vehicle shape, size, acoustic reflections, speakers, Mic and its characteristics and position.
- Number of tuning parameter sets must be determined by PSA that covers the variations in vehicle line up.

SW EC/NR Performance [DMIPS]

Sample Rate	Average
8KHz	200
16KHz	310

Created by: LOISILLIER Arthur	Reference FCE-2021-0223	Title PSA SPS Datasheet	
Revised by: Akshay Malpani	Date 2022-11-22	Edition N°: 1.7	Status Completed

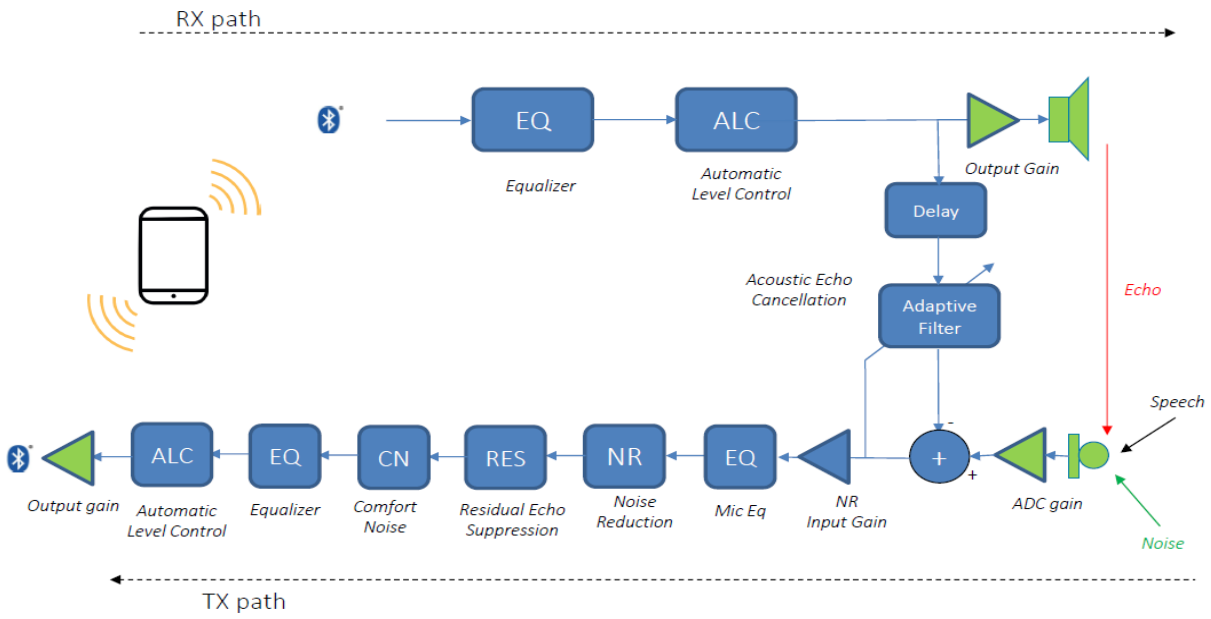

Created by: LOISILLIER Arthur	Reference FCE-2021-0223	Title PSA SPS Datasheet	
Revised by: Akshay Malpani	Date 2022-11-22	Edition N°: 1.7	Status Completed

6.4 SW UPDATES

ECU can support via CAN.

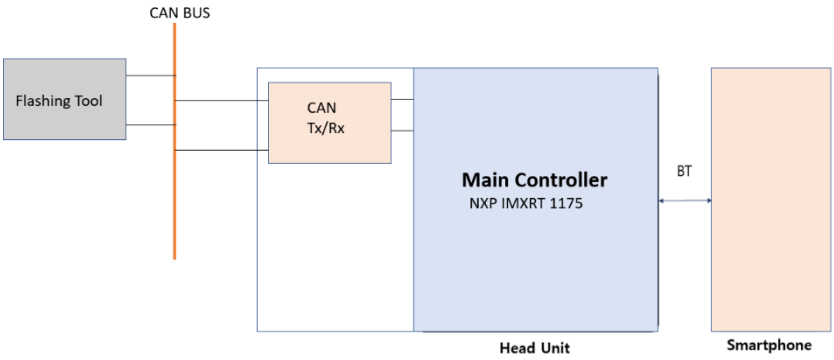

6.5 CYBERSECURITY CONCEPT

Item	Microcontroller – iMX RT 1175
Secure Boot	System Boot ROM including High Assurance Boot (HAB)
Secure Storage	➢ Off-chip storage protection using AES-256 and the chip's unique hardware-only key ➢ 4KB Secure RAM (SRAM) in SNVS ➢ Zeroizable Master Key (256 bits) SNVS General Purpose Registers (256 bits)
Secure debugging	➢ First time flashing (During mass production) will happen in serial downloading mode hrough UART port and that will be secure flashing ➢ Debug connector provision only till C sample, for mass production it will be close
Cryptographic Acceleration	➢ Symmetric Engines - AES 128, 256 with baseline modes (additional modes include CM, CMAC), 3DES, DES ➢ Public Key Cryptography Engine (PKHA): RSA up to 4096 key length, elliptic curve supporting NIST, Brainpool) ➢ Manufacturing protection ➢ 64-bit multiplier for V2X performance requirements (500+ NIST P-256 signatures/sec) ➢ Cryptographic Hash Engine: SHA-1, SHA-2 224/256/384/512, MD5, and HMAC ➢ Random Number Generator (RNG)

Created by: LOISILLIER Arthur	Reference FCE-2021-0223	Title PSA SPS Datasheet	
Revised by: Akshay Malpani	Date 2022-11-22	Edition N°: 1.7	Status Completed

	➢ True random entropy source ➢ NIST-certified Deterministic Random Bit Generator (Hash-based) ➢ Secure Hardware-only Cryptographic Key Management ➢ Encrypted boot ➢ Revision control check based on fuse values ➢ Data Encryption Key (DEK) includes IV
Secure Non-volatile storage (SNVS)	➢ Tamper protection ➢ DryICE

7 VALIDATION

7.1 TEST RIG SETUP FOR CAN VALIDATION

Purpose of this bench is:

- Simulation of vehicle network (Diagnostic…)
- Simulation of command messages
- Simulation of displayed information

This setup allows the control of the SPS but is also capable of monitoring the network activity and the message exchange between the different “virtual” peripherals.
In case of system validation, it also allows to monitor the message exchanges and identify the cause of a possible malfunction or abnormal behavior of the system on a specific scenario.

The ECU control simulator will be developed through CaNoe (Vector).
Here under diagram shows the CAN network set up:

Created by: LOISILLIER Arthur	Reference FCE-2021-0223	Title PSA SPS Datasheet	
Revised by: Akshay Malpani	Date 2022-11-22	Edition N°: 1.7	Status Completed

7.2 TEST RIG SETUP FOR SYSTEM TEST

Test set up will be as described on below figure. The setup allows generation of the CAN communication with the system. This communication is established by using of CANoe (©Vector) and a computer as interface.
These tests are performed by using the complete system with all peripherals connected to the SPS and CAN network simulator. Main target is to confirm the correct functioning of the device when introduced in its environment. In case of problem, by using the CAN monitoring in parallel, they also allow to get the evidence of cause of trouble (module concerned and root cause). CAN logs are, in this case, attached to the bug description sheet for further analysis purpose.

As the system is mostly controlled by the Mobile Application (Radio Tuner operating), a dedicated testing solution will be used against this interface.

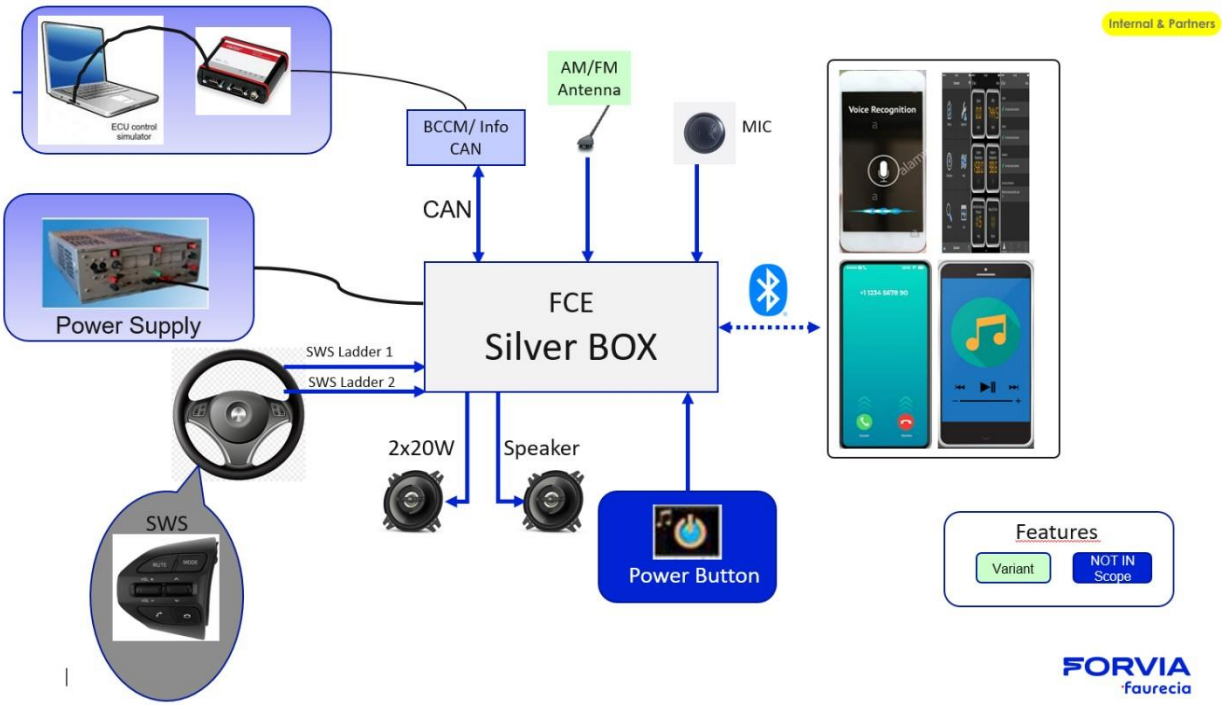

Created by: LOISILLIER Arthur	Reference FCE-2021-0223	Title PSA SPS Datasheet	
Revised by: Akshay Malpani	Date 2022-11-22	Edition N°: 1.7	Status Completed

7.3 TEST RIG SETUP FOR FUNCTIONAL TEST

The CAN Box is configured with a selection of CAN messages in order to control the SPS. CAN traces analysis is not perform with this setup. The global functions of the product are validated by using the functional tests. The functional tests are performed at each milestones step and according to the maturity level of the concerned prototype or software version. Those tests will validate the SPS content from a software and hardware point of view.

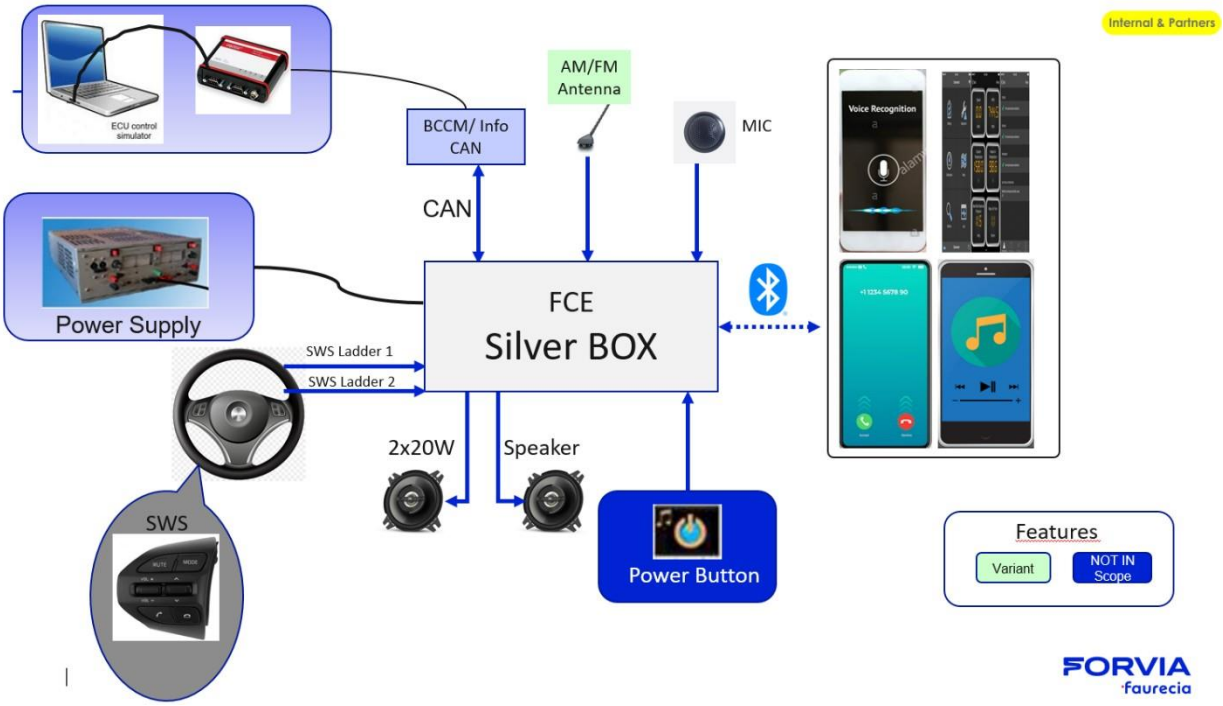

Created by: LOISILLIER Arthur	Reference FCE-2021-0223	Title PSA SPS Datasheet	
Revised by: Akshay Malpani	Date 2022-11-22	Edition N°: 1.7	Status Completed

7.4 BT INTEROPERABILITY TEST

Bluetooth Interoperability Tests will be performed on 100 smartphones during project development. After SOP, 10 smartphones can be replaced once in 6 months in the test plan.

7.5 FUNCTIONAL VALIDATION TEST TYPES

Testing activities can be considered via two aspects: **Verification** and **Validation** (aka V&V)

Principle	Definitions [From ISO/IEC/IEEE 29119]	Keep in mind
Verification	Verification is confirmation, through the provision of objective evidence, that specified requirements have been fulfilled in a given work item	=> Satisfies customer requirements
Validation	Validation demonstrates that the work item can be used by the users for their specific tasks	=> Usability for end users

Different types of testing are defined

Test Type	V&V	Test Scope	Concerned Testing nodes	Comments and most usage
Smoke	Verification	Software is testable There is no missing feature	Manual Automated	Also included at least one flashing and one update test
Life Cycle	Verification & Validation	Flash and Update packages Check factory settings and product parameters	Manual / Bus Automated	Specific tests for each new update or each new zone added
Bug checking	Depends on bugs	Re-tests in order to give feedback to R&D and check resolutions	Each testing node	Bug tracker status to focus on - Feedback (*priority*) - Resolved

Created by: LOISILLIER Arthur	Reference FCE-2021-0223	Title PSA SPS Datasheet	
Revised by: Akshay Malpani	Date 2022-11-22	Edition N°: 1.7	Status Completed

Test Type	V&V	Test Scope	Concerned Testing nodes	Comments and most usage
New feature	Verification	Dedicated plan according to latest feature implemented	Each testing node	
Feature	Verification	Feature standalone	Each testing node	Used for non-regression testing
Crossed features	Validation	Mix several features in same test session	Each testing node	
Performances	Verification & Validation	Scripted measurements	Automated / Bus /	Boot time, CPU load, memory used, data access times…
Endurance	Validation	Use of features for several hours Repeated use in standard usage	Automated / Automated Vehicle Bus CAN	Sources streaming, multiple calls, power cycles …
Stress	Validation	Scripted over system limits or random scenario	Automated / Bus / Manual /	Random power cut / recovery Heavy plug/unplug…
Exploratory	Validation	Exploratory testing on whole product or focused on one feature	Manual	Can be used any time in workflow Include also Beta tests

Created by: LOISILLIER Arthur	Reference FCE-2021-0223	Title PSA SPS Datasheet	
Revised by: Akshay Malpani	Date 2022-11-22	Edition N°: 1.7	Status Completed

7.6 QUALIFICATION TEST

Qualification test plan will be aligned with B21 standards, but results will be impacted by the industrial grade components proposed, some B21 tests could not pass. Proposed test flow presented below:

All functions will be tested on each sample before and after DV qualification and after each test.

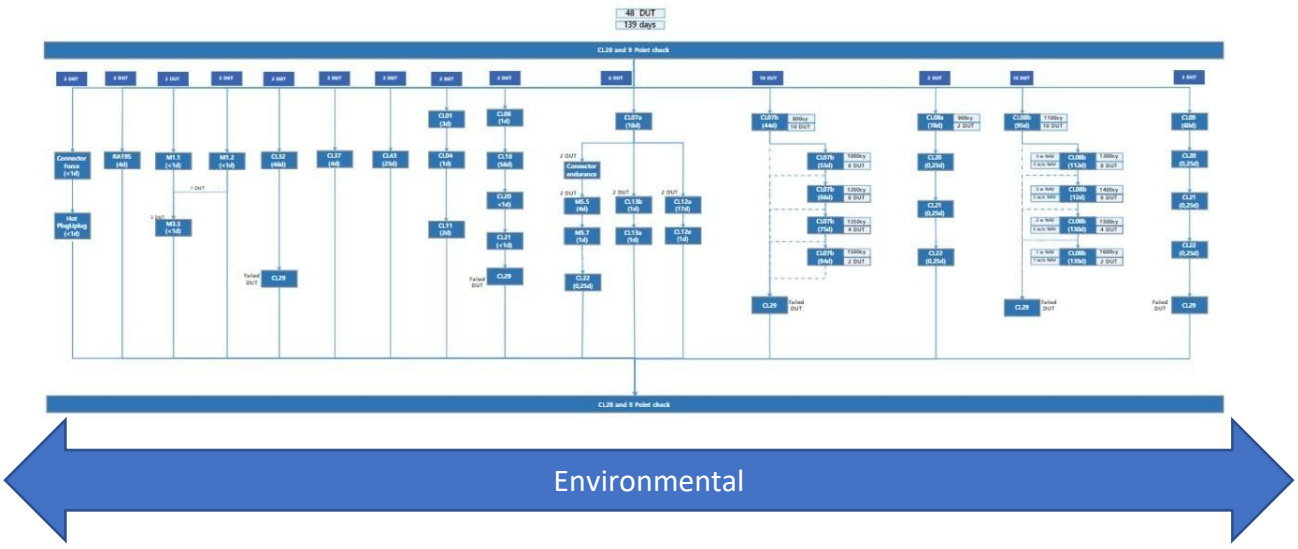

Created by: LOISILLIER Arthur	Reference FCE-2021-0223	Title PSA SPS Datasheet	
Revised by: Akshay Malpani	Date 2022-11-22	Edition N°: 1.7	Status Completed

Figure 7-1: Flow chart of DV qualification (Electrical and EMC Tests)

EMC test items	
ELETRICAL SYSTEM PERFORMANCE	TE01 、 TE02 、 TE03 、 TE04 、 TE05, 、 TE07 、 TE08, IC04、IC05、IC06
CONDUCTED AND RADIATED EMISSIONS	MC02、MC03, MC04 MR01、MR02
RF IMMUNITY	IC08, IR01、IR02、IR05
VOLTAGE TRANSIENTS IMMUNITY	IC01、IC02、IC03、IC07, IC12, IC13 IR03、IR04

Table 7-1: Flow chart of DV qualification (EMC - Series Tests)

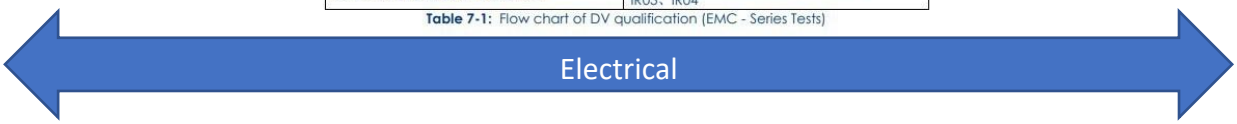

Created by: LOISILLIER Arthur	Reference FCE-2021-0223	Title PSA SPS Datasheet	
Revised by: Akshay Malpani	Date 2022-11-22	Edition N°: 1.7	Status Completed

8 CERTIFICATIONS & REGULATION

Certification	Authentication
Bluetooth SIG	Compliance to BT SIG specs
Apple iAP2	Compliance iAP2
Market access certification (As per country applicability matrix Documents)	FM/AM radio features will be included

Regulation	Regulation Number	Compliance
Restrictive use of Heavy materials	Directive 2000/53	Yes
Recyclability	ECE R133	Yes
RF use and RF Certification	Radio Equipment Directive (2014/53/EU)	Yes
Electromagnetic compatibility	ECE R10.06	Component level E-marking
Interior fittings	ECE R21.02	Yes
Devices for indirect vision	ECE R46.06	NA
GDPR	EU 2016/679	Yes
General requirements to be followed for all electrical devices	Low Voltage Directive(2014/35/EU)	Yes
CE Marking	EC no. Xxxxxx	Yes
Cyber Security	UNECE R155	NA

Created by: LOISILLIER Arthur	Reference FCE-2021-0223	Title PSA SPS Datasheet	
Revised by: Akshay Malpani	Date 2022-11-22	Edition N°: 1.7	Status Completed

9 TSO REFERENCE

In below mentioned link, all TSO signed off documents for SPS project is present:

https://faurecia.sharepoint.com/:f:/r/sites/A-TEAMPSA-TCSEntryLevelAudio/Shared%20Documents/General/99.%20Outputs%20-%20to%20customer/TSO%20SIGNOFF%20DOC?csf=1&web=1&e=ZaX9Vt

- Faurecia Clarion Electronics Europe hereby declares that SPS-K9 (In Vehicle Infotainment) compiles with essential requirements of the Directive 2014/53/EU. A copy of the European Declaration of conformity can be found attached to this User Manual.

- This device complies with the MPE limit at 20 cm as specified in 47 CFR §1.1310. This device meets the EU requirements (2014/53/EU Article 3.1a) on the limitation of exposure of general public to electromagnetic fields by way of health protection. The device complies with RF specification when the device used at 20 cm from your body.

- Faurecia Clarion Electronics Europe hereby declares that SPS-K9 (In Vehicle Infotainment) compiles with essential requirements of the Radio Equipment Regulations 2017. A copy of the UKCA Declaration of conformity can be found attached to this User Manual.

FCC Compliance statments

This device complies with art 15 of the FCC Rules. Operation is subject to the following two conditions:
(1) this device may not cause harmful interference, and
(2) this device must accept any interference received, including interference that may cause undesired operation.

This equipment has been tested and found to comply with the limits for a Class B digital device, pursuant to part 15 of the FCC Rules. These limits are designed to provide reasonable protection against harmful interference in a residential installation.

This equipment generates, uses and can radiate radio frequency energy and, if not installed and used in accordance with the instructions, may cause harmful interference to radio communications. However, there is no garantee that interference will not occur in a particular installation. If this equipment does cause harmful interference to radio or television reception, which can be determined by turning the equipment off and on, the user is encouraged to try to correct the interference by one or more of the following measures:
— Reorient or reloate the receiving antenna.
— Increase the separation between the equipment and receiver.
— Connect the equipment into an outlet on a circuit different from that to which the receiver is connected..
— Consult the dealer or an experienced radio/TV technician for help.

15.21. Caution: Any changes or modifications to this device not explicitly approved by manufacturer could void your authority to operate this equipment.