Bluetooth antenna specification

Model：FSC-ANT_G

1，Index

Item	Content	Page	Remark
1	Index	1	
2	Spec Drawing	2	
3	Specification	2	
4	Antenna On Test Board	3	
5	Return Loss	3	
6	Radiation Pattern	3	

Document Type: 2.4GHZ PCB antenna
Document Version: V1.0
Release Date: 2019-10-21

Shenzhen Feasycom Co., LTD

Telephone: 86-755-27924639

www.feasycom.com

2，Spec Drawing

Unit：mm

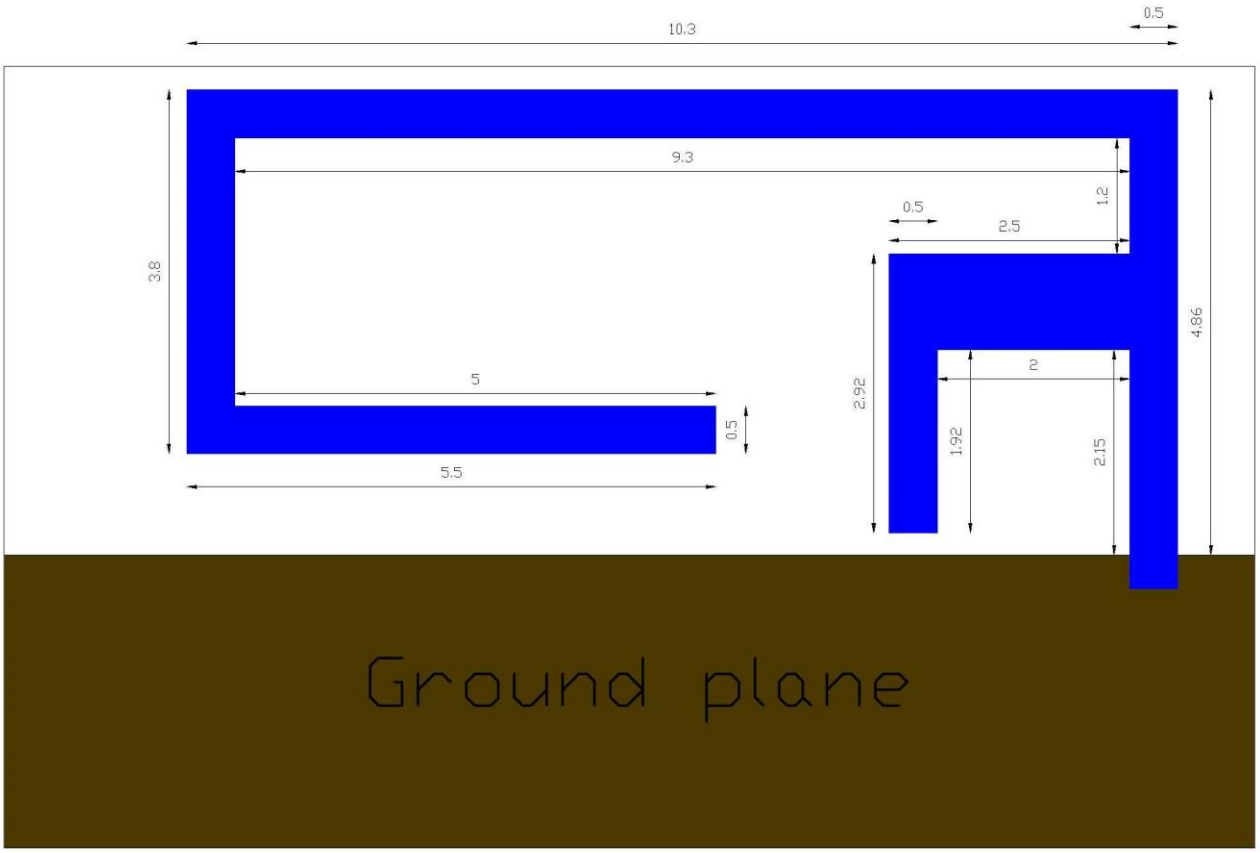

3， Specification

Product Number: 2.4GHZ PCB antenna
Sample Photo:

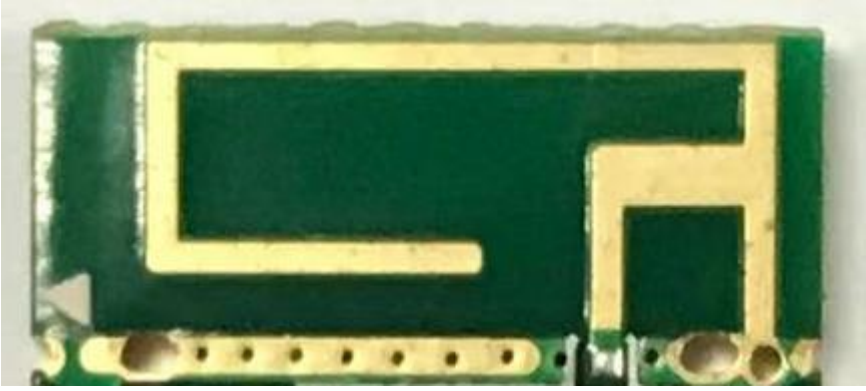

A. Electrical Characteristics	
Frequency	2400 ~ 2500 MHz
S.W.R.	<=2.0
Gain	2.0 dBi
Efficiency	~ 40%
Polarization	Linear
Impedance	50 Ohm
B. Material & Mechanical Characteristics	
Material of Radiator	copper
C. Environmental	
Operation Temperature	- 40℃ ~ + 85℃
Storage Temperature	- 40℃ ~ + 105℃

4， Antenna On Test Board

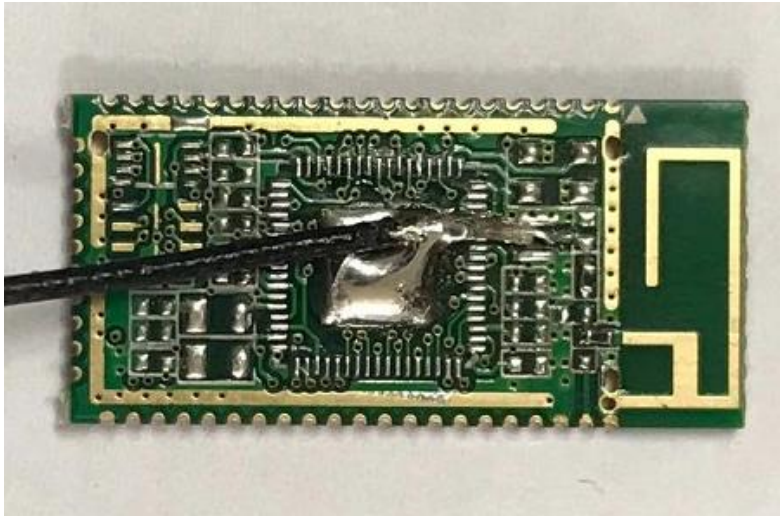

5, Return Loss

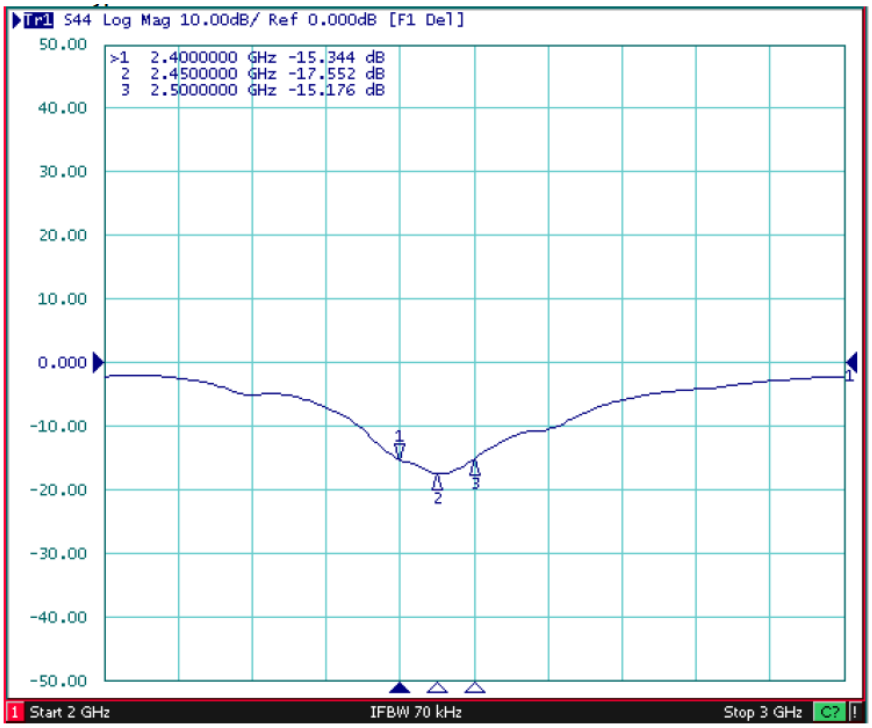

6，Radiation Pattern

Radiation Pattern and Gain were dependent on measurement board design. The specification of PCB antenna was measur ed based on the PCB size and installation position as shown in the below figure Test Board.

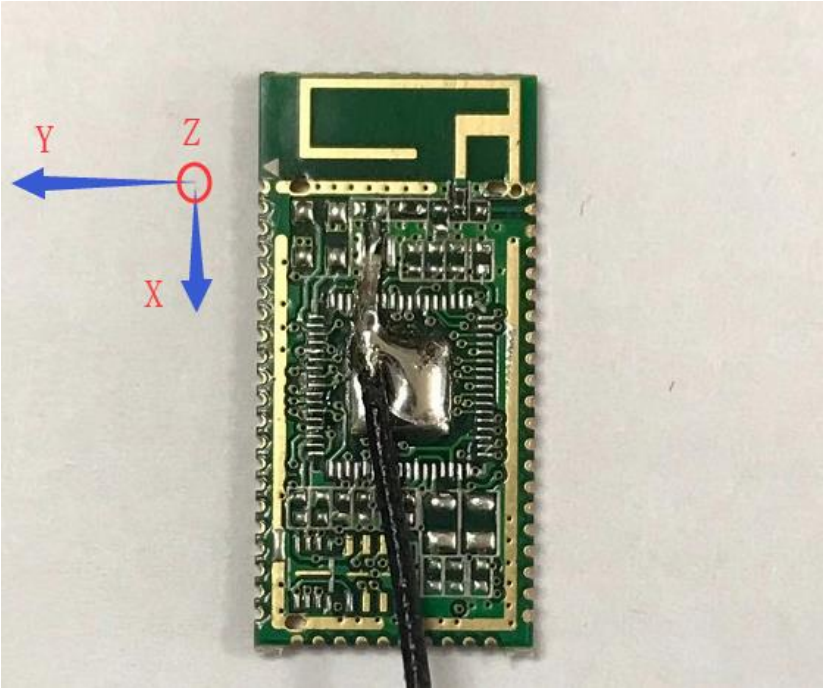

	Vertical	Horizontal
Y - Z Plane Average Gain=1.86 dBi	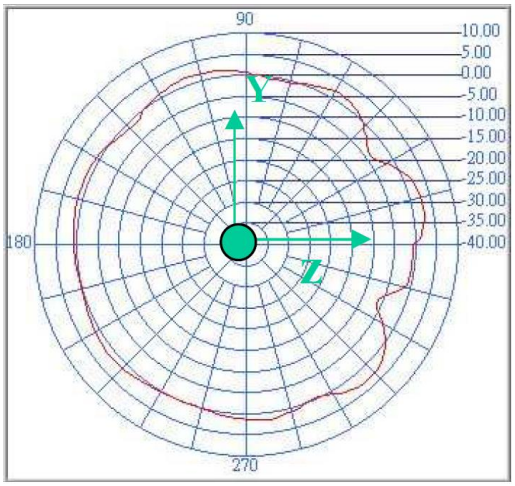	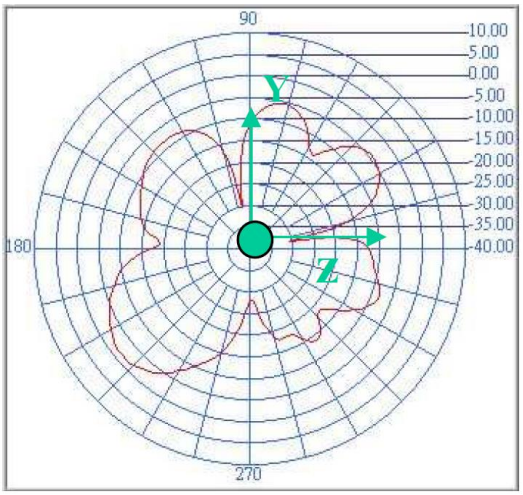
	Peak Gain = 2.00 dBi Average Gain = 0.71 dBi	Peak Gain= -1.37 dBi Average Gain= - 4.6 dBi
X - Z Plane Average Gain=-2.91dBi	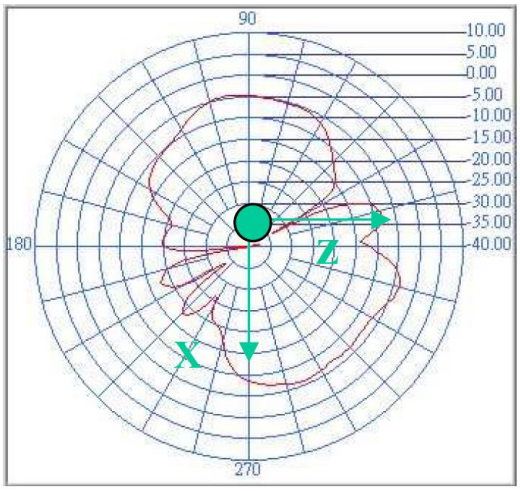	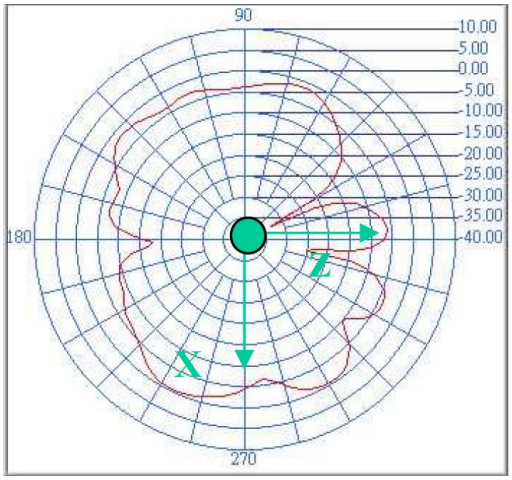
	Peak Gain= -3.76 dBi Average Gain= -8.72dBi	Peak Gain= -0.25 dBi Average Gain= -4.24 dBi
X - Y Plane Average Gain=-0.95 dBi	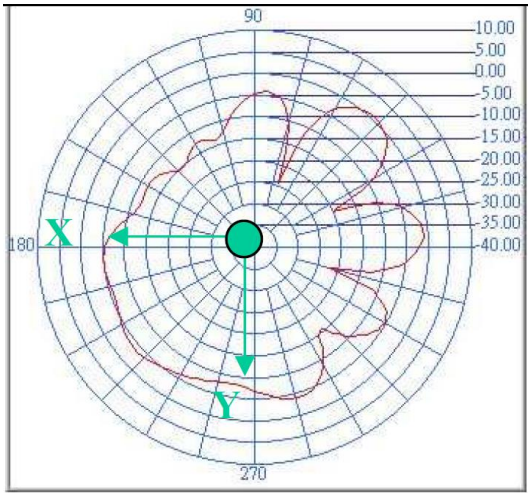	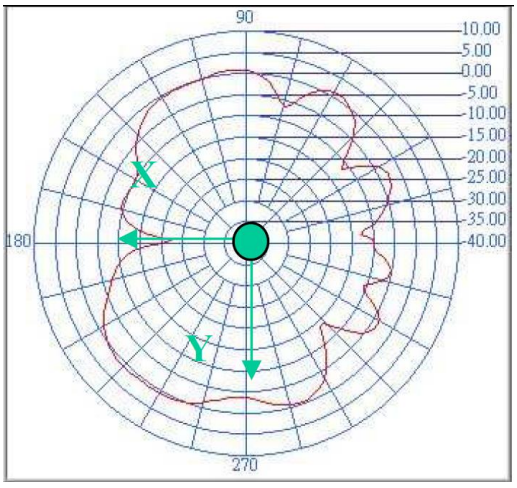
	Peak Gain= 0.76 dBi Average Gain= -5.81dBi	Peak Gain= 1.37 dBi Average Gain= -2.67 dBi

Test Result:

Frequency VNA	E Total. dB(dB)	Efficiency
2400MHz	0.685768	40.77%
2410MHz	1.14545	47.37%
2420MHz	0.222461	40.01%
2430MHz	-0.12456	33.43%
2440MHz	0.34146	37.54%
2450MHz	1.013454	41.57%
2460MHz	2.00546	50.87%
2470MHz	0.642456	41.25%
2480MHz	-0.224356	37.14%
2490MHz	-0.468674	33.53%
2500MHz	0.716586	40.72%