MyAntenna
全球领先的天线和电子标签产品供应商

承认书
SPECIFICATION FOR APPROVAL

客户名称CUSTOMER：

客户料号 CUSTOMER PARTNO：

供应厂商SUPPLIER：Shen Zhen MyAntenna RF Technology Co.,Ltd

产品型号Product model： FYT-01

产品描述Product name：FYT-01 2.4G Antenna

产品编码Product code：M01-0600460R0A

客户签名 CUSTOMER SIGNATURE：	客户盖章 CUSTOMER SEAL：

供应商签名 SUPPLIER SIGNATURE：	供应商盖章 SUPPLIER SEAL：

注意：请将此副本作为您的批准证明回签！

NOTE: PLEASE RETURN THIS COPY AS A CERTIFICATION OF YOUR APPROVAL

编制 Prepared by: DONG	日期 Date: 2023.08.19	地址 Add:	Room 410, Building A, Fenghuang Zhigu, No. 50 Tiezi Road, Gongle Community, Xi xiang Street, Baoan District, Shenzhen
		电话 Tel:	0755-86503881

版本信息 VERSION INFORMATION

版本 Version	日期 DATE	版本描述 REVISION DESCRIPTION	编制 PREPARED	审核 CHECKED	批准 APPROVED
V1.0	2023.08.19	Initial Release	DONG		

性能参数 PERFORMANCE PARAMETER

1.电气参数 Electrical Characteristics		
1	频率范围 Frequency Range	2400-2500MHz
2	驻波比 V.S.W.R	≤3
3	最大增益 Gain	3.43dBi
4	最大效率 Efficiency	61.29%
5	阻抗 Impendence	50Ω
6	极化方式 Polarization	linear polarization
7	接口类型 Interface type	IPEX 1
2.机械参数 Mechanical parameters		
1	尺寸 Measure	FPC:50.85*8.5mm/ Cable: 200.0mm*Φ1.13mm
2	颜色 Colour	Black

3.环境参数 Environment Condition

1	工作温度 Working Temp	-40℃~85℃

测试图表 TESTING CURVE

1.性能测试 Performance test

1.1 驻波比 V.S.W.R

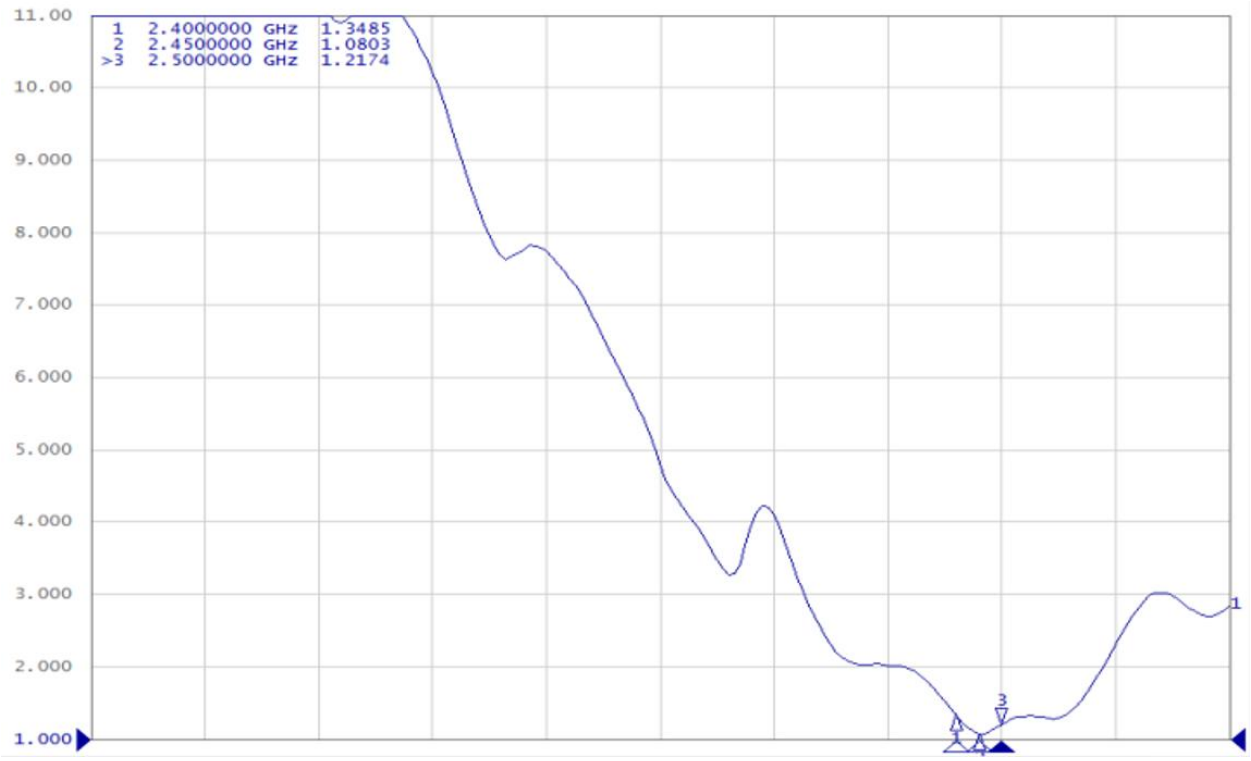

数据表 Data list

Freq	2.4	2.45	2.5
VSWR	1.35	1.08	1.22

测试图表 TESTING CURVE

2. 无源测试 Passive testing

2.1 效率及增益 Efficiency and Gain

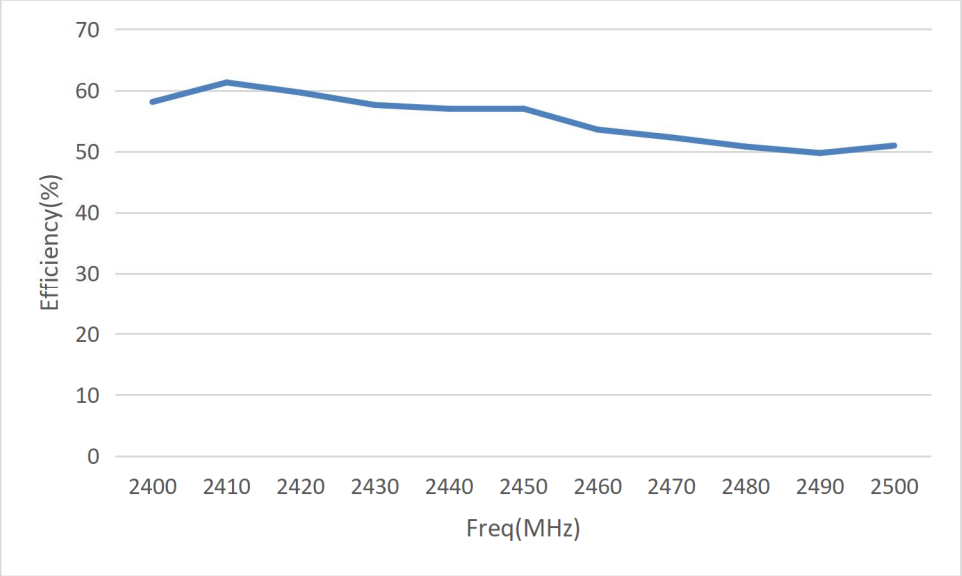

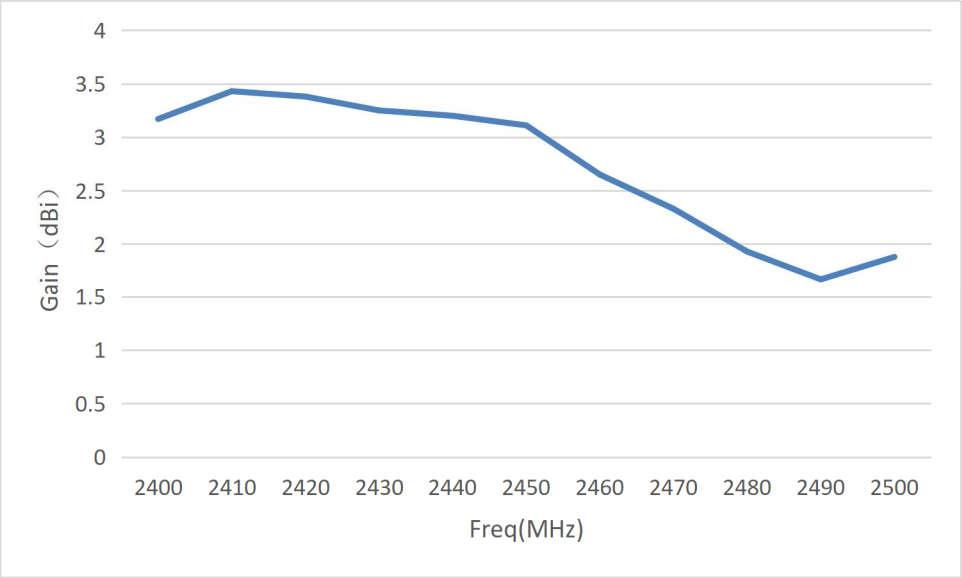

测试图表 TESTING CURVE

效率及增益数据表 Efficiency and Gain Data list

Freq(MHz)	Efficiency(%)	Gain（dBi）
2400	58.1	3.17
2410	61.29	3.43
2420	59.63	3.38
2430	57.6	3.25
2440	56.98	3.2
2450	57.01	3.11
2460	53.58	2.65
2470	52.29	2.33
2480	50.79	1.93
2490	49.74	1.67
2500	50.96	1.88

测试图表 TESTING CURVE

2.2 3D 图 3D Map

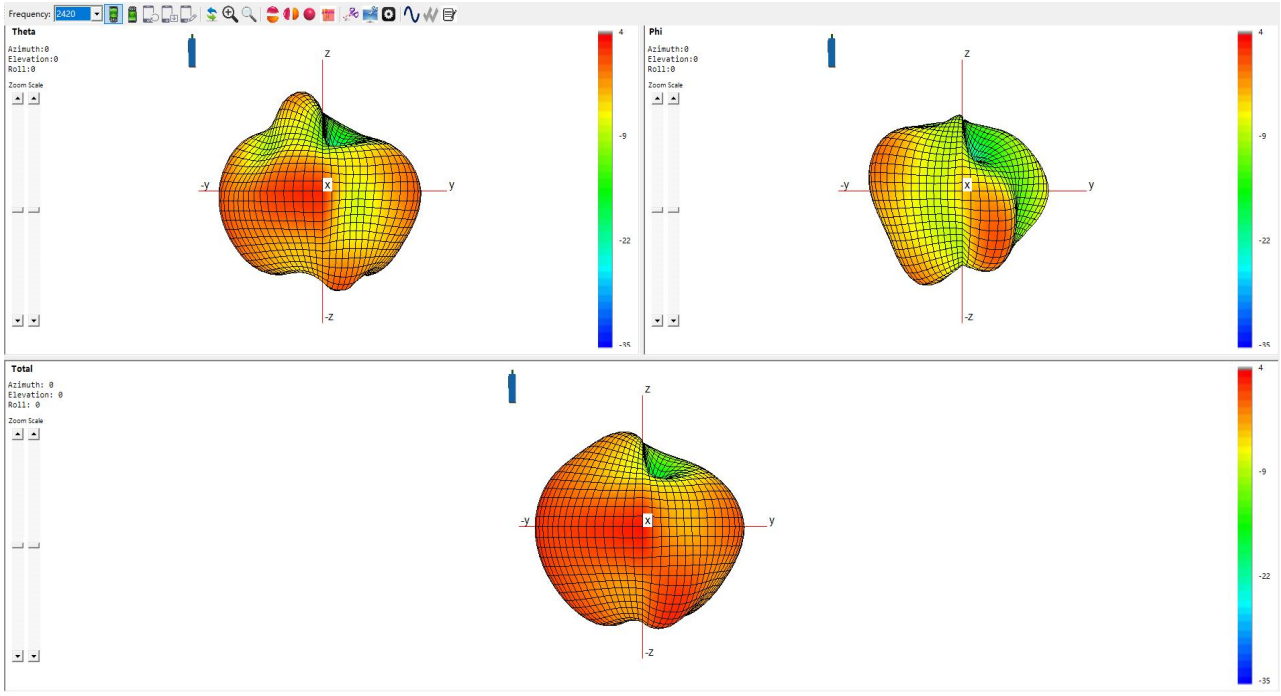

2420MHz

Gain=3.38dBi

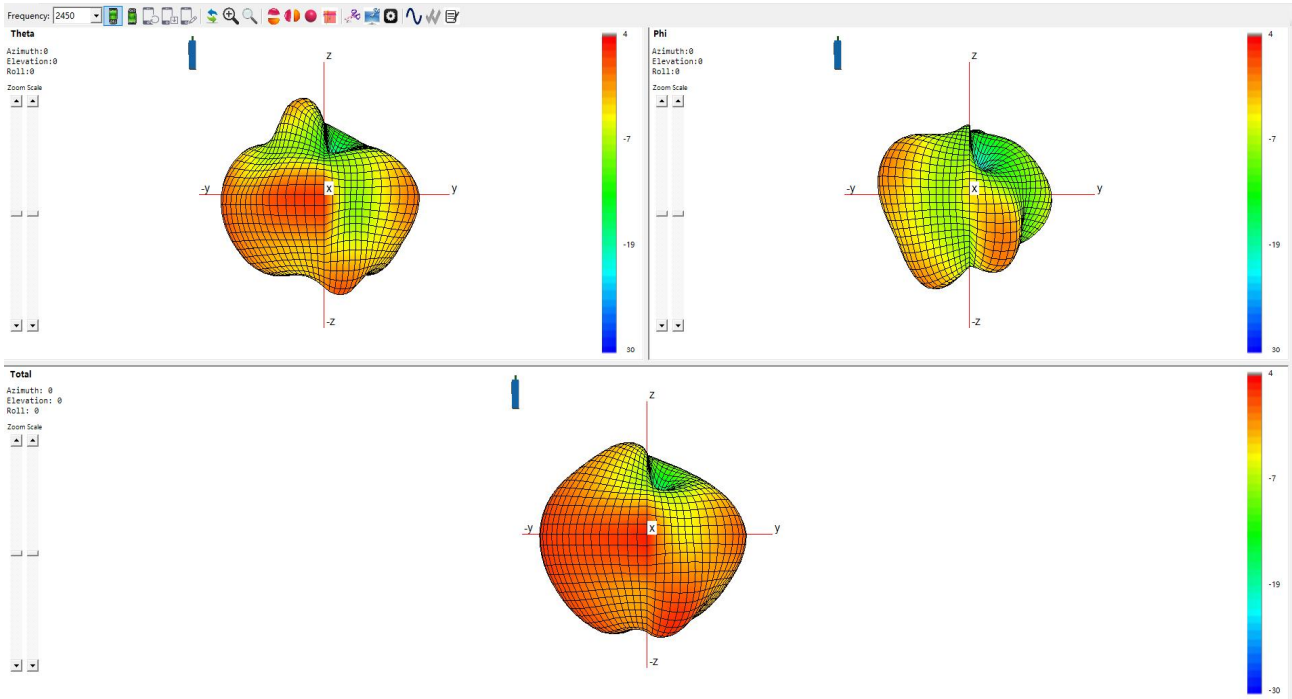

2450MHz

Gain=3.11dBi

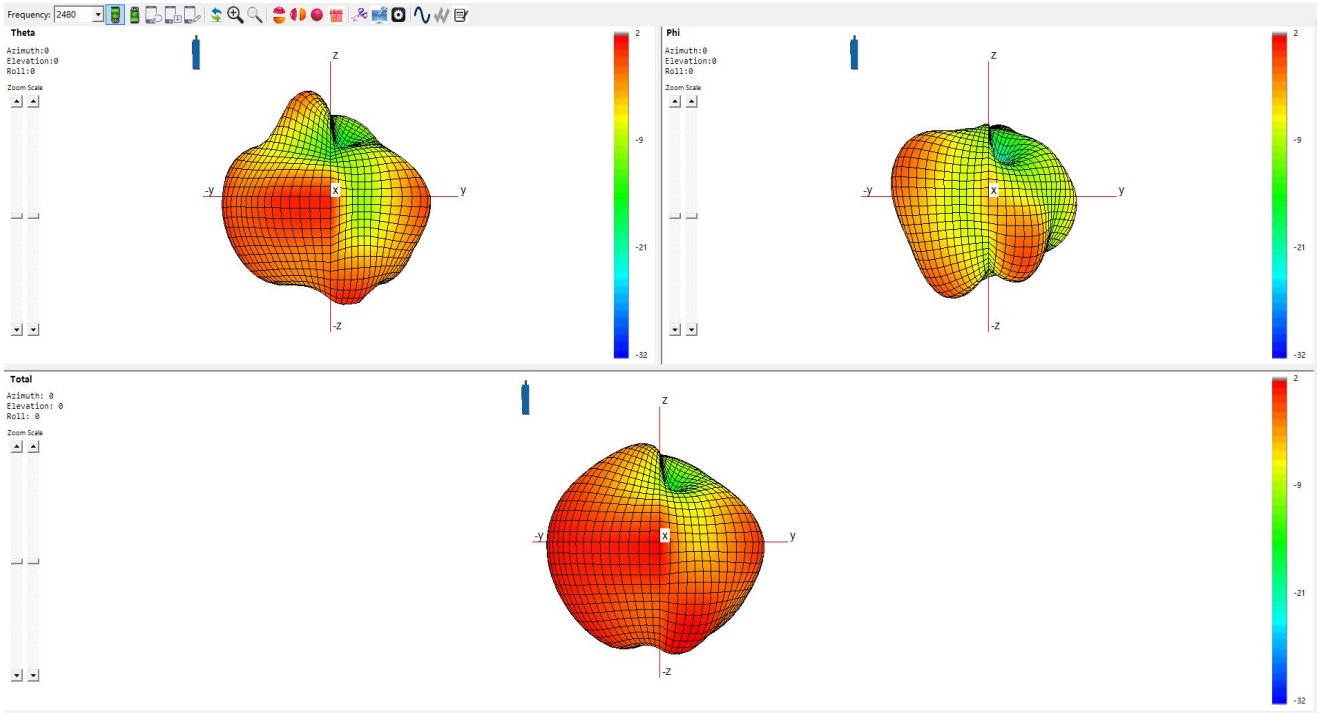

2480MHz

Gain=1.93dBi

2.3 2D 图 2D Figure

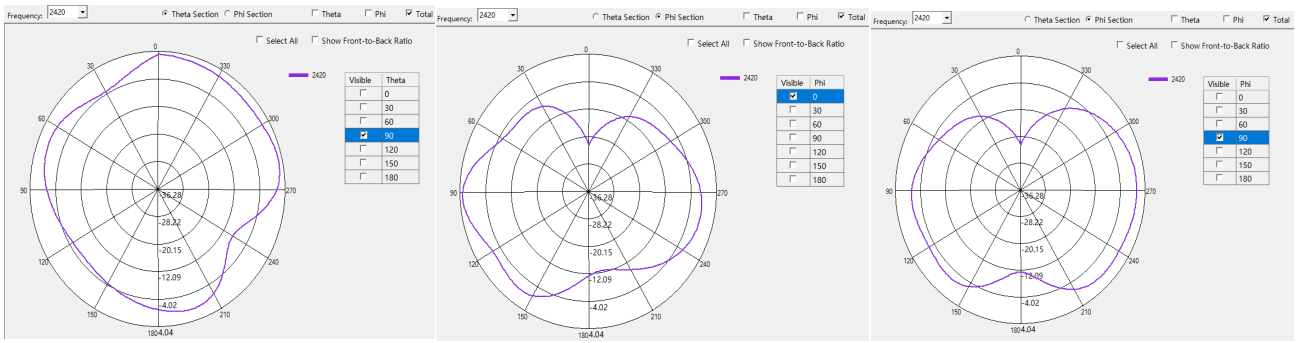

2420MHz

Gain=3.38dBi

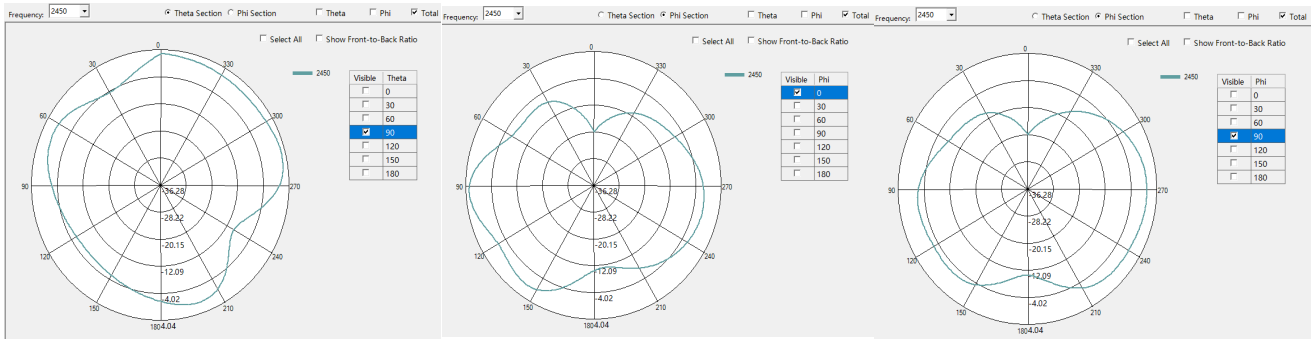

2450MHz

Gain=3.11dBi

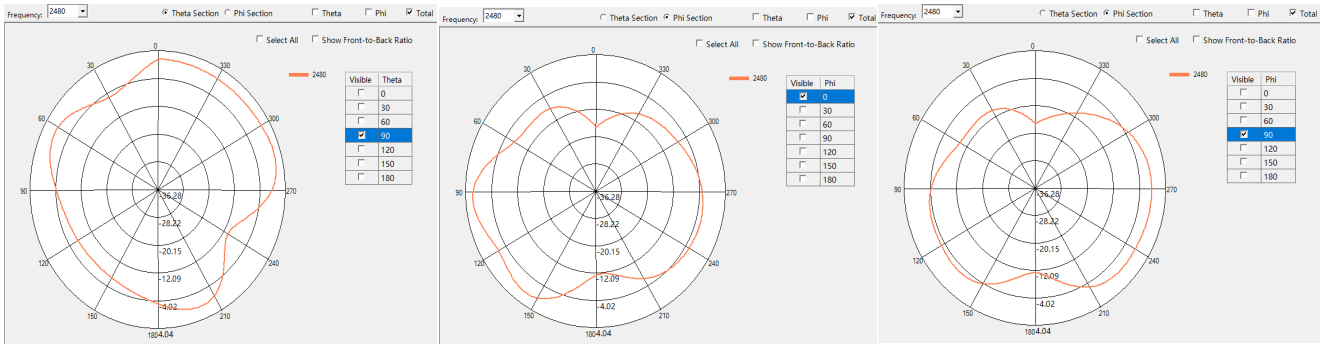

2480MHz

Gain=1.93dBi

3. 有源测试 Active testing（Nothing）

工程图 SCHEDULE DRAWING

RoHS Compliant GP

No.	Name	Color	Treatment
1	FPC	black	50.85*8.5
2	Cable	black	Φ1.13*200.0

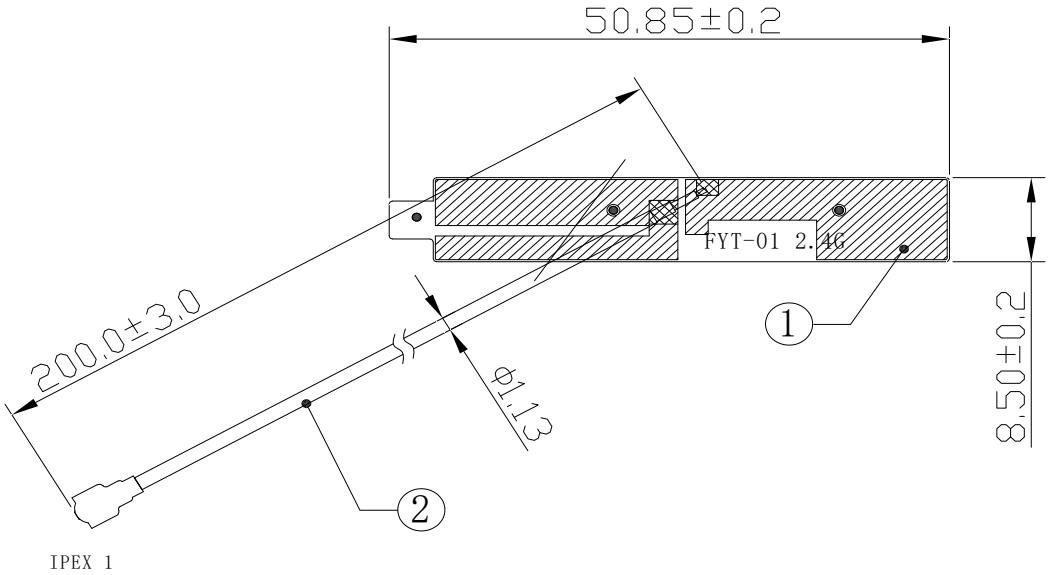

REMARKS:

1. ALL MATERIALS ARE RoHS COMPLIANT.

Rev	Description	Date	Remark
A0	New drawing	20220421	

ShenZhen MyAntenna RF Technology Co.,Ltd

Third Angle

0～10	±0.10	○
10～18	±0.15	◎
18～30	±0.20	⊥
30～40	±0.25	▱
40～	±0.30	Angle

Location

Project	FYT-01	Designed by	
Part Name	2.4G Antenna	Date	
Part No.	M01-0600460R0A	Checked by	RF
Material		Date	
DWG No.		Approved by	
		Unit mm	Scale 1:1

包装示意图 PACKING DIAGRAM

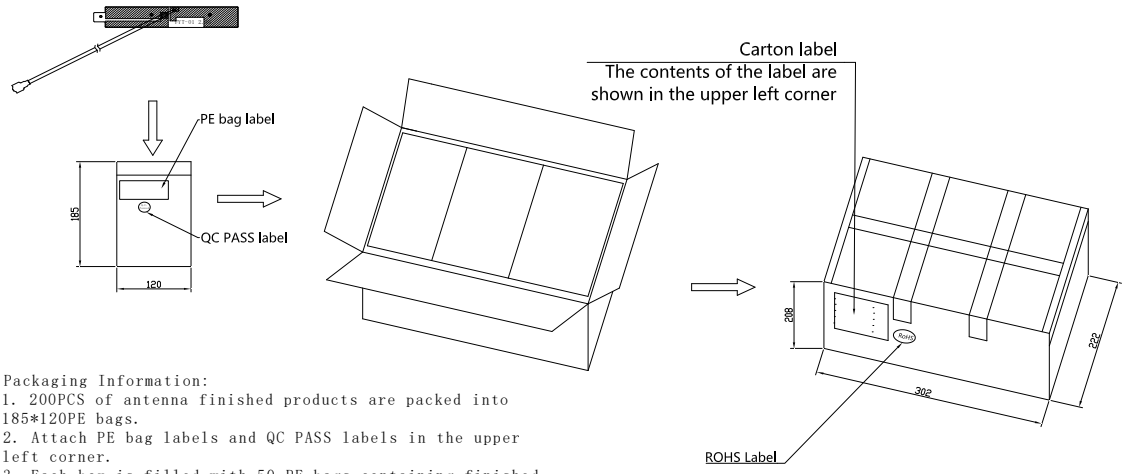

Packaging Information:
1. 200PCS of antenna finished products are packed into 185*120PE bags.
2. Attach PE bag labels and QC PASS labels in the upper left corner.
3. Each box is filled with 50 PE bags containing finished antennas, and each box contains a total of 10,000 antennas. The box size and quantity can be adjusted according to actual production conditions.
4. Then paste the outer box label and ROHS label on the upper left corner of the long side of the carton.
5. Finally, use two pieces of packaging tape horizontally and vertically to seal the carton in a "井" shape.

MyAntenna	ShenZhen MyAntenna RF Technology Co.,Ltd						
Third Angle				Project	FYT-1	Designed by	
0～10	±0.05	○	0.02	Part Name	Packing instruction	Date	
10～18	±0.10	◎	0.03	Part No.	M01-0600460R0A	Checked by	RF
18～30	±0.12	⊥	0.02	Material		Date	
30～40	±0.15	▱	0.04	Treatment		Approved by	
40～	±0.20	Angle	±0.5°	Color		Unit mm	Scale 1:1

天线实物图 ANTENNA PHYSICAL DIAGRAM

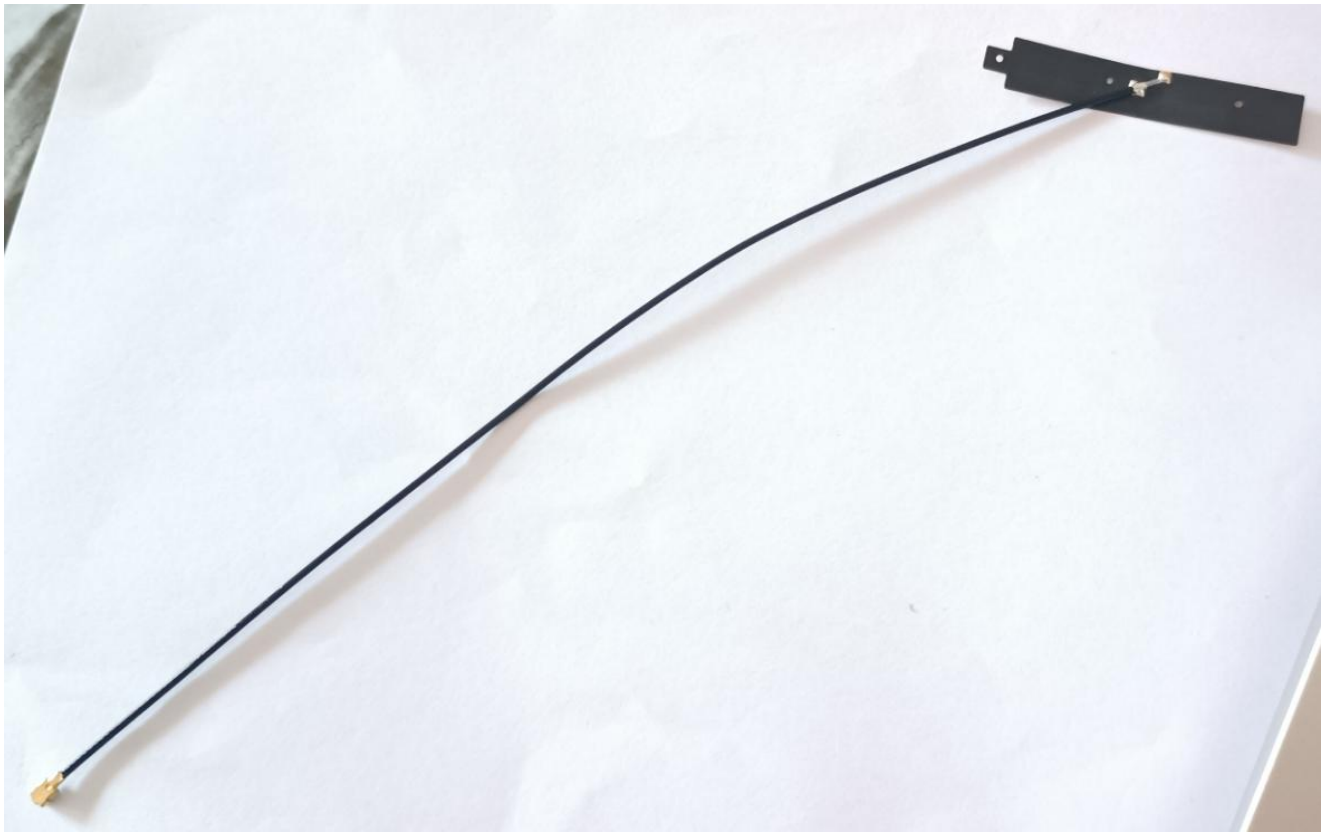

承认书样品尺寸检验报告
Certificate of Acceptance Sample Size Inspection Report

The name of the project	FYT-01	antenna type	FPC antenna	Inspection date	2023-08-19

检查清单Check List

	测试项目 Test Item	规格要求 Test criteria	结果 Result					备注 Remark
			1	2	3	4	5	
模块 Module	线材 Cable	The wires should be free from scratches and cracks, and the plug terminals should be free from corrosion, looseness, deformation, and correct port orientation.						
	FPC	Color and specification requirements shall be consistent, free from color difference, mismatch, or other defects.						
Performance Test	驻波比 VSWR	≤3						
shape size		50.85±0.2						
		200.0±3						
		8.5±0.2						

备注							
Approved: Yang yong cheng		: Chen Jianyu		Inspector: Dong Chun Ling			

QC Engineering Drawing			File number	MA-QCW-2307-034		File name	GPS+BD+GLONASS Antenna				establishment	Li Ling
			edition	A							examine	Xu Maoyuan
			edition	2023.07.25		Effective date	2023.07.25		pagination	1/1	Give permission to	Xu Maoyuan
NO.	Flow	Process name	Make art parameters/quality characteristics		Use equipment fixtures	Testing equipment	Inspection method	Inspection frequency	Usage record		Person in charge	Related document
1		Incoming inspection	Inspection standard/drawing		caliper	/	visual	AQL sampling check	IQC inspection report		IQC	
2		Product	Production task		/	/	/	/	Material		Warehouse	

		ion requisition	sheet					requisition	keeper	
3		Unpack (unpack) to confirm the quantity	Delivery note	/	/	/	/	Delivery note	operator	
4		Make the first product	Technical documents/drawings/BOM	/	handwork	visual	Complete inspection	Daily production report	operator	
5		First appearance confirmation	Sealed sample	/	visual	visual	/	IPQC first inspection record	IPQC	
6		First		/	Netwo	test	/	IPQC first	IPQC	

		piece performance test	The product meets the requirements in the design specification		rk analyzer	visual		inspection record		
7		inspection	IPQC process inspection regulations	/	visual	visual	2H	IPQC process inspection records	IPQC	
8		Complete appearance inspection	Technical documents/drawings /appearance criteria	/	visual	visual	Complete inspection	Daily production report	inspector	
9		test	Technical documents/drawings	/	Network analyzer	test visual	Complete inspection	Daily production report	operator	
10		Packing (bag) quantit	Drawing /BOM	/	/	visual	Complete inspec	Daily production report	operator	

		y confirm ation					tion			
11		inspect	IPQC process inspection regulations	/	visua l	visual	2H	IPQC process inspection records	IPQC	
12		Be put in storage	Production task sheet	/	/	/	/	Product receipt	Warehouse keeper	
13		Pre-shi pment inspect ion	Shipping order	Netwo rk analy zer	measu re	AQL sampli ng check	/		OQC	

Mark	Modify content	Edition	Date	Mender	Examine and approve
		A	2023.08.19	Li Ling	Xu Maoyuan

产品验证 PRODUCT VERIFICATION

Test item	Test specification/test criteria	Target requirement	Product Verification (PV)							Remark
			sample		Test site			test	Person in charge	
			quantity	type	client	supplier	Third party	result		
Visual inspection	There should be no dents, scratches, cracks, deformation, burrs, mildew and other defects on the surface; The surface coating should not blister, crack or fall off; Metal parts should not be corroded and other mechanical damage; Perfusion should not spill.	Normal appearance	Complete inspection	workwear		√		OK		

dimension	Drawing size	Within dimensional tolerances	3pcs	workwear		√		OK		
Performance check	The product meets the requirements in the design specification	Short circuit and conduction test	Complete inspection	workwear		√		OK		
Torsion	SMA torque	Bearing capacity less than 9kgf-cm	3pcs	workwear		√		OK		
Salt spray resistance	48-hour salt spray test	No rust on the surface after cyclic verification	3pcs	/		√		OK		
Requirements for prohibited and restricted substances	Test according to RoHs requirements	Products shall comply with RoHs standards	/	/			√	OK		

Packing specification	Place according to the drawing specification	Visually placed as required	Complete inspection	workwear		√		OK		

BOM 明细 BOM DETAILS

Serial number	Product code	Product model	Edition	Specification description	Colour	Unit	Dosage
1	F01-0101210R0A	FPC	V1.1	Black/FPC Half-Material/Back Adhesive 3M300LSE/OSP/50.85*8.5mm/RoHs	black	PCS	1
2	X01-0201370R0A	Cable	V1.0	Black/Double-Tin Coaxial Cable/One end stripped (2.0/2.5/1.0)/One end terminated with ZP1 connector/1.13*200.0mm/RoHs	black	PCS	1
3							
4							