TEST REPORT

Product Name	:	TFT DASHBOARD
Model Number	:	351000-P15A
FCC ID	:	2BEZV-351000-P15A

Prepared for	:	Taizhou Zhongneng Motorcycle Co., Ltd.
Address	:	Building 8, 99 haixiu Road, Eastern New District, Taizhou Bay New District, Taizhou City, Zhejiang Province, P.R. China
Prepared by	:	EMTEK (NINGBO) CO., LTD.
Address	:	No. 8, Building 8, Lane 216, Qingyi Road, Ningbo Hi-Tech Zone, Ningbo, Zhejiang, China Tel: +86-574-27907998 Fax: +86-574-27721538

Report Number	:	ENB2312200251W00302R
Date(s) of Tests	:	December 20, 2023 to March 28, 2024
Date of Issue	:	April 10, 2024

TABLE OF CONTENTS

1 TEST RESULT CERTIFICATION 3

2 EUT TECHNICAL DESCRIPTION 4

3 SUMMARY OF TEST RESULT 5

4 TEST METHODOLOGY 6

4.1 GENERAL DESCRIPTION OF APPLIED STANDARDS 6
4.2 MEASUREMENT EQUIPMENT USED 6
4.3 DESCRIPTION OF TEST MODES 8
4.4 TEST SOFTWARE 9

5 FACILITIES AND ACCREDITATIONS 10

5.1 FACILITIES 10
5.2 LABORATORY ACCREDITATIONS AND LISTINGS 10

6 TEST SYSTEM UNCERTAINTY 11

7 SETUP OF EQUIPMENT UNDER TEST 12

7.1 RADIO FREQUENCY TEST SETUP 1 12
7.2 RADIO FREQUENCY TEST SETUP 2 12
7.3 CONDUCTED EMISSION TEST SETUP 13
7.4 BLOCK DIAGRAM CONFIGURATION OF TEST SYSTEM 15
7.5 SUPPORT EQUIPMENT 15

8 TEST REQUIREMENTS 16

8.1 DTS (6DB) BANDWIDTH 16
8.2 MAXIMUM CONDUCTED (AVERAGE) OUTPUT POWER 23
8.3 MAXIMUM POWER SPECTRAL DENSITY 32
8.4 UNWANTED EMISSIONS IN NON-RESTRICTED FREQUENCY BANDS 39
8.5 RADIATED SPURIOUS EMISSION 44
8.6 CONDUCTED EMISSIONS TEST 56
8.7 ANTENNA APPLICATION 57

1 TEST RESULT CERTIFICATION

Applicant	:	Taizhou Zhongneng Motorcycle Co., Ltd.
Address	:	Building 8, 99 haixiu Road, Eastern New District, Taizhou Bay New District, Taizhou City, Zhejiang Province, P.R. China
Manufacturer	:	Ningbo Boxin Electric Appliance Co., Ltd
Address	:	89 Zhenxing West Road, Economic Development Zone, Yuyao City, Zhejiang Province
EUT	:	TFT DASHBOARD
Model Name	:	351000-P15A
Trademark	:	博尔旭® BOERXU

Measurement Procedure Used:

APPLICABLE STANDARDS	
STANDARD	**TEST RESULT**
FCC 47 CFR Part 2, Subpart J FCC 47 CFR Part 15, Subpart C	PASS

The above equipment was tested by EMTEK (NINGBO) CO., LTD. The test data, data evaluation, test procedures, and equipment configurations shown in this report were made in accordance with the procedures given in ANSI C63.10 (2013) and the energy emitted by the sample EUT tested as described in this report is in compliance with the requirements of FCC Rules Part 2 and Part 15.247

The test results of this report relate only to the tested sample identified in this report.

Date of Test : December 20, 2023 to March 28, 2024

Prepared by : June Gao/Engineer

Reviewer : Vinay/Supervisor

Approved & Authorized Signer : Tony Wei/Manager

2 EUT TECHNICAL DESCRIPTION

Characteristics	Description
Product	TFT DASHBOARD
Model Number	351000-P15A
Sample Number	ENB2312200251W003-1-1
IEEE 802.11 WLAN Mode Supported	☒802.11b ☒802.11g ☒802.11n(20MHz channel bandwidth) ☒802.11n(40MHz channel bandwidth)
Data Rate	802.11 b:1,2,5.5,11Mbps; 802.11 g:6,9,12,18,24,36,48,54Mbps; 802.11 n: MCS0~7,up to 150Mbps;
Modulation	DSSS with DBPSK/DQPSK/CCK for 802.11b; OFDM with BPSK/ CCK /16QAM/64QAM for 802.11g/n(HT20)/n(HT40);
Operating Frequency Range	☒2412-2462MHz for 802.11b/g/n(HT20); ☒2422-2452MHz for 802.11n(HT40);
Number of Channels	☒11 channels for 802.11b/g n(HT20); ☒7 Channels for 802.11n(HT40);
Transmit Power Max	15.52 dBm
Smart system	☒SISO for802.11 b/g/n(HT20)/n(HT40); ☐MIMO for802.11n(HT20);
Antenna Type	Ceramic Antenna
Antenna Gain	1.5 dBi
Power supply	DC 12V
Temperature Range	-30℃~+80℃
Date of Received	December 20, 2023

Note: *for more details, please refer to the User's manual of the EUT.*

3 SUMMARY OF TEST RESULT

FCC Part Clause	Test Parameter	Verdict	Remark
15.247(a)(2)	DTS (6dB) Bandwidth	PASS	
15.247(b)(3)	Maximum Peak Conducted Output Power	PASS	
15.247(e)	Maximum Power Spectral Density Level	PASS	
15.247(d)	Unwanted Emission Into Non-Restricted Frequency Bands	PASS	
15.247(d) 15.209	Unwanted Emission Into Restricted Frequency Bands (conducted)	PASS	
15.247(d) 15.209	Radiated Spurious Emission	PASS	
15.207	Conducted Emission Test	N/A	
15.247(b)	Antenna Application	PASS	
	NOTE1:N/A (Not Applicable) NOTE2: According to FCC OET KDB 558074, the report use radiated measurements in the restricted frequency bands. In addition, the radiated test is also performed to ensure the emissions emanating from the device cabinet also comply with the applicable limits.		

RELATED SUBMITTAL(S) / GRANT(S):

This submittal(s) (test report) is intended for FCC ID: 2BEZV-351000-P15A filing to comply with Section 15.247 of the FCC Part 15, Subpart C Rules

4 TEST METHODOLOGY

4.1 GENERAL DESCRIPTION OF APPLIED STANDARDS

According to its specifications, the EUT must comply with the requirements of the following standards:
FCC 47 CFR Part 2, Subpart J
FCC 47 CFR Part 15, Subpart C
FCC KDB 558074 D01 15.247 Meas Guidance v05r02

4.2 MEASUREMENT EQUIPMENT USED

4.2.1 Radiated Emission Test Equipment

Equ. No.	Equipment	Manufacturer	Model No.	Serial No.	Last Cal.	Cal. Interval
ENE-185	EMI Test Receiver	R&S	ESR7	102480	May 18, 2023	1 Year
ENE-190	Antenna multiple	Schwarzbeck	VULB 9163	01499	May 27, 2022	2 Year
ENE-191	Horn antenna	Schwarzbeck	BBHA 9120 D	02588	May 21, 2022	2 Year
ENE-195	Pre-Amplifier	JS Denki	PA09K03-40	JSPA21019	May 27, 2023	1 Year
ENE-204	Low frequency notch filterRf switching	JS Denki	JSDSW-F	JSDSW2211D02	May 27, 2023	1 Year
ENE-279	RF cable	Rosenberger	L17-C001-7000	/	June 01, 2023	1 Year
ENE-280	RF cable	Rosenberger	L17-C001-3500	/	June 01, 2023	1 Year
ENE-281	RF cable	Rosenberger	L08-C446-1500	/	June 01, 2023	1 Year
ENE-282-1	RF cable	Rosenberger	/	/	June 01, 2023	1 Year
ENE-282-2	RF cable	Rosenberger	/	/	June 01, 2023	1 Year
ENE-171	EXA Signal Analyzer	KEYSIGHT	N9010B	MY60242467	Feb. 28, 2023	1 Year
ENE-171	EXA Signal Analyzer	KEYSIGHT	N9010B	MY60242467	Feb. 27, 2024	1 Year
ENE-191	Horn antenna	Schwarzbeck	BBHA 9120 D	02588	May 21, 2022	2 Year
ENE-198	Pre-amplifier	JS Denki	PA0118-50	JSPA21022	April 28, 2023	1 Year
ENE-193	Horn antenna	Schwarzbeck	BBHA 9170	01190	May 21, 2022	2 Year
ENE-199	Pre-amplifier	JS Denki	PA1840-55	JSPA21023	April 28, 2023	1 Year
ENE-281-1	RF cable	Rosenberger	LA2-C125-3500	/	May 31, 2023	1 Year
ENE-281-2	RF cable	Rosenberger	LA2-C125-1500	/	May 31, 2023	1 Year
ENE-281-3	RF cable	Rosenberger	LU7-C1511-1200	/	May 31, 2023	1 Year
ENE-285-1	RF cable	Rosenberger	LA2-C199-6500	/	May 31, 2023	1 Year

ENE-290-1	RF cable	Schwarzbeck	LA1-C006-4000	/	May 31, 2023	1 Year
ENE-206	High frequency notch filterRf switching	JS Denki	JSDSW-F	202083582	April 28, 2023	1 Year

Note: ENE-171 was calibrated on February 27, 2024, and was not tested on that date.

4.2.2 Radio Frequency Test Equipment

Equ. No.	Equipment	Manufacturer	Model No.	Serial No.	Last Cal.	Cal. Interval
ENE-256	EXA Signal Anaalyzer	Keysight	N9010B	MY62060219	July 05, 2023	1 Year
ENE-172	RF Control Unit	Tonscend	JS0806-2(V.6E)	21L8060521	March 01, 2023	1 Year
ENE-172	RF Control Unit	Tonscend	JS0806-2(V.6E)	21L8060521	Feb 27, 2024	1 Year
ENE-092	DC Power Supply	KEFUNA	KDP3603	2004D3062946	July 07, 2023	1 Year

Note: The ENE-172 was calibrated on February 27, 2024, and was not tested on that date.

4.3 DESCRIPTION OF TEST MODES

The EUT has been tested under its typical operating condition.
The EUT configuration for testing is installed on RF field strength measurement to meet the Commissions requirement and operating in a manner which intends to maximize its emission characteristics in a continuous normal application.

The Transmitter was operated in the normal operating mode. The TX frequency was fixed which was for the purpose of the measurements.

Test of channel included the lowest and middle and highest frequency to perform the test, then record on this report.

Those data rates (☒802.11b:1 Mbps;☒802.11g: 6 Mbps;☒802.11n(HT20): MCS0;☒802.11n(HT40): MCS0) were used for all test.

Pre-defined engineering program for regulatory testing used to control the EUT for staying in continuous transmitting and receiving mode is programmed.

☒Frequency and Channel list for 802.11b/g/n (HT20):

Channel	Frequency (MHz)	Channel	Frequency (MHz)	Channel	Frequency (MHz)
1	2412	6	2437	11	2462
2	2417	7	2442		
3	2422	8	2447		
4	2427	9	2452		
5	2432	10	2457		

☒Frequency and Channel list for 802.11n (HT40):

Channel	Frequency (MHz)	Channel	Frequency (MHz)	Channel	Frequency (MHz)
3	2422	6	2437	9	2452
4	2427	7	2442		
5	2432	8	2447		

☒Test Frequency and Channel for 802.11b/g/n (HT20):

Lowest Frequency		Middle Frequency		Highest Frequency	
Channel	Frequency (MHz)	Channel	Frequency (MHz)	Channel	Frequency (MHz)
1	2412	6	2437	11	2462

☒Test Frequency and Channel for 802.11n (HT40):

Lowest Frequency		Middle Frequency		Highest Frequency	
Channel	Frequency (MHz)	Channel	Frequency (MHz)	Channel	Frequency (MHz)
3	2422	6	2437	9	2452

4.4 TEST SOFTWARE

Item	Software
Radiated Emission:	UI_mptool (V2.0)

5 FACILITIES AND ACCREDITATIONS

5.1 FACILITIES

All measurement facilities used to collect the measurement data are located at

No. 8, Building 8, Lane 216, Qingyi Road, Ningbo Hi-Tech Zone, Ningbo, Zhejiang, China
The sites are constructed in conformance with the requirements of ANSI C63.7, ANSI C63.10 and CISPR Publication 32.

5.2 LABORATORY ACCREDITATIONS AND LISTINGS

Site Description

EMC Lab. : **Accredited by CNAS**
The Certificate Registration Number is L6666.
The Laboratory has been assessed and proved to be in compliance with CNAS-CL01:2018 (identical to ISO/IEC 17025:2017)

Designation by FCC
Designation Number: CN1354
Test Firm Registration Number: 427606

Accredited by A2LA
The Certificate Number is 4321.03.
The certificate isvalid until May 31, 2025

Designation by Industry Canada
The Conformity Assessment Body Identifier is CN0114

Name of Firm : EMTEK (NINGBO) CO., LTD.
Site Location : No. 8, Building 8, Lane 216, Qingyi Road, Hi-Tech Zone, Ningbo, Zhejiang, China

6 TEST SYSTEM UNCERTAINTY

The following measurement uncertainty levels have been estimated for tests performed on the apparatus:

Parameter	Uncertainty
Radio Frequency	± 1x10^-5
Maximum Peak Output Power Test	± 1.0 dB
Conducted Emissions Test	± 2.0 dB
Radiated Emission Test	± 2.0 dB
Power Density	± 2.0 dB
Occupied Bandwidth Test	± 1.0 dB
Band Edge Test	± 3 dB
All emission, radiated	± 3 dB
Antenna Port Emission	± 3 dB
Temperature	± 0.5 ℃
Humidity	± 3 %

Measurement Uncertainty for a level of Confidence of 95%

7 SETUP OF EQUIPMENT UNDER TEST

7.1 RADIO FREQUENCY TEST SETUP 1

The WLAN component's antenna ports(s) of the EUT are connected to the measurement instrument per an appropriate attenuator. The EUT is controlled by PC/software to emit the specified signals for the purpose of measurements.

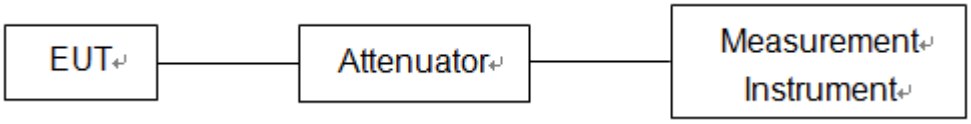

7.2 RADIO FREQUENCY TEST SETUP 2

The test site semi-anechoic chamber has met the requirement of NSA tolerance 4 dB according to the standards: ANSI C63.10. The test distance is 3m.The setup is according to the requirements in Section 13.1.4.1 of ANSI C63.10-2013 and CAN/CSA-CEI/IEC CISPR 22.

Below 30MHz：

The EUT is placed on a turntable 0.8 meters above the ground in the chamber, 3 meter away from the antenna (loop antenna). The Antenna should be positioned with its plane vertical at the specified distance from the EUT androtated about its vertical axis formaximum response at each azimuth about the EUT. The center of the loopshall be 1 m above the ground.For certain applications, the loop antennaplane may also need to be positioned horizontally at the specified distance from the EUT.

30MHz-1GHz：

The EUT is placed on a turntable 0.8 meters above the ground in the chamber, 3 meter away from the antenna. The maximal emission value is acquired by adjusting the antenna height, polarisation and turntable azimuth. Normally, the height range of antenna is 1 m to 4 m, the azimuth range of turntable is 0° to 360°, and the receive antenna has two polarizations Vertical (V) and Horizontal (H).

Above 1GHz：

The EUT is placed on a turntable 1.5 meters above the ground in the chamber, 3 meter away from the antenna. The maximal emission value is acquired by adjusting the antenna height, polarisation and turntable azimuth. Normally, the height range of antenna is 1 m to 4 m, the azimuth range of turntable is 0° to 360°, and the receive antenna has two polarizations Vertical (V) and Horizontal (H).

(a) Radiated Emission Test Set-Up, Frequency Below 30MHz

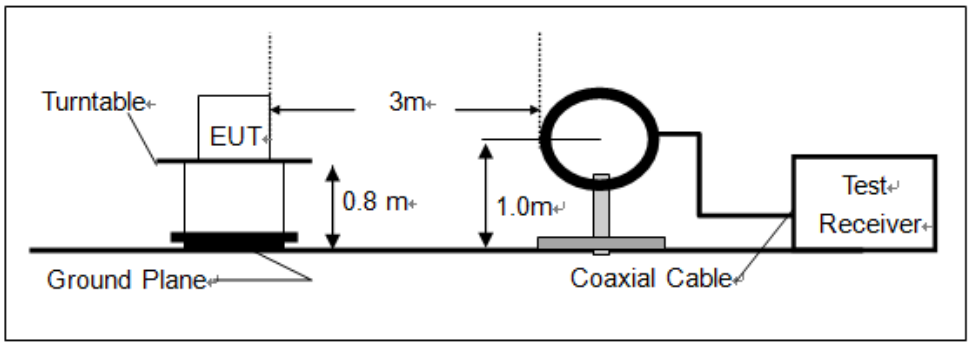

(b)Radiated Emission Test Set-Up, Frequency Below 1000MHz

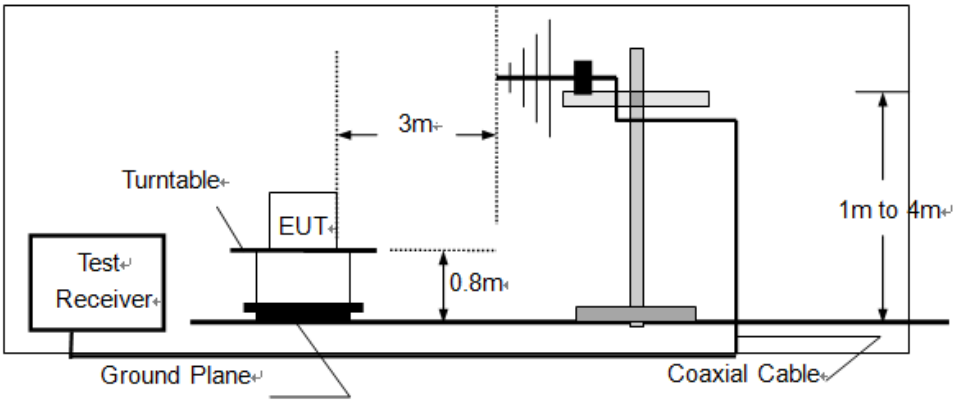

(c) Radiated Emission Test Set-Up, Frequency above 1000MHz

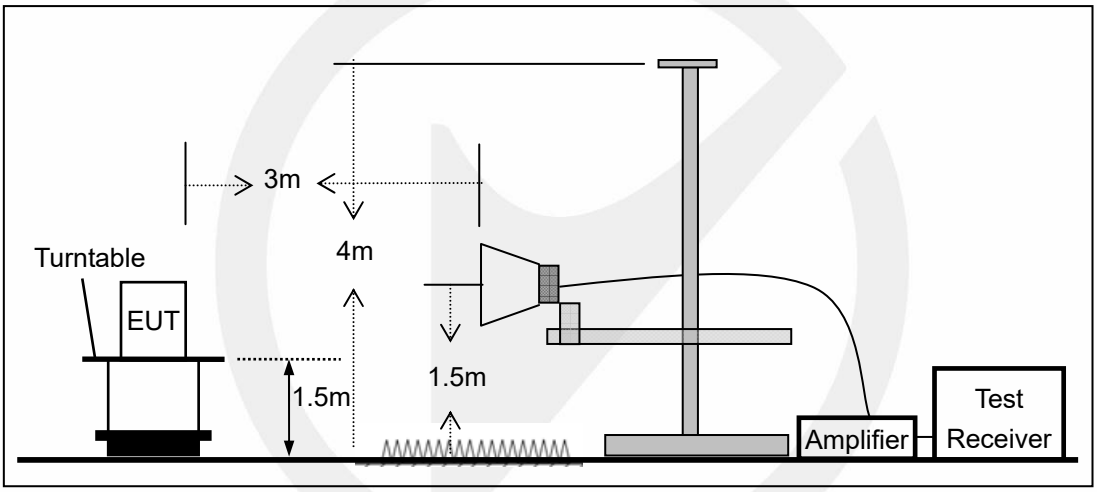

7.3 CONDUCTED EMISSION TEST SETUP

The mains cable of the EUT (maybe per AC/DC Adapter) must be connected to LISN. The LISN shall be placed 0.8 m from the boundary of EUT and bonded to a ground reference plane for LISN mounted on top of the ground reference plane. This distance is between the closest points of the LISN and the EUT. All other units of the EUT and associated equipment shall be at least 0.8m from the LISN.
Ground connections, where required for safety purposes, shall be connected to the reference ground point of the LISN and, where not otherwise provided or specified by the manufacturer, shall be of same length as the mains cable and run parallel to the mains connection at a separation distance of not more than 0.1 m.
According to the requirements in Section 13.1.4.1 of ANSI C63.10-2013 Conducted emissions from the EUT measured in the frequency range between 0.15 MHz and 30 MHz using CISPR Quasi-Peak and average detector mode.

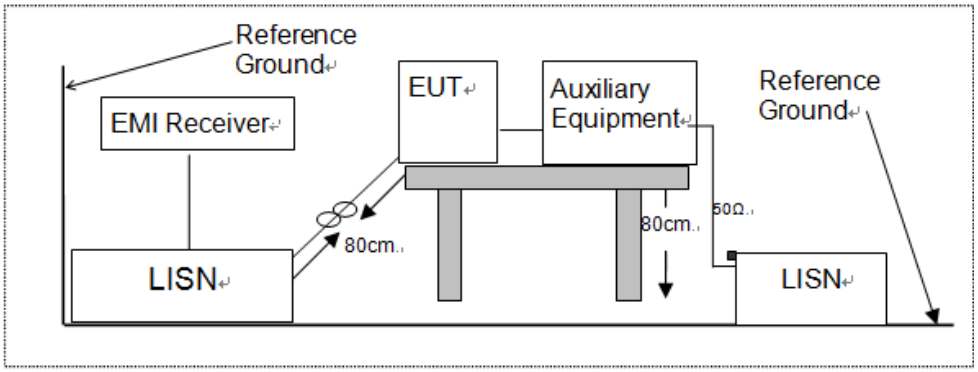
Reference Ground
EMI Receiver
EUT
Auxiliary Equipment
Reference Ground
50Ω
80cm
80cm
LISN
LISN

7.4 BLOCK DIAGRAM CONFIGURATION OF TEST SYSTEM

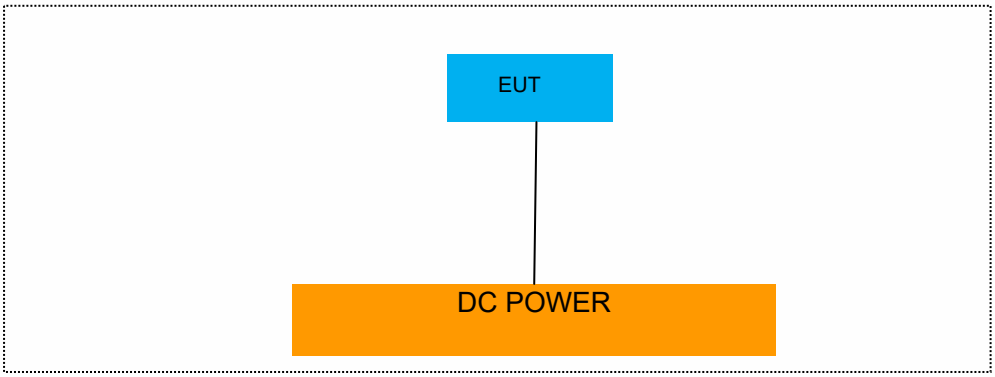

7.5 SUPPORT EQUIPMENT

EUT Cable List and Details			
Cable Description	Length (m)	Shielded/Unshielded	With / Without Ferrite
/	/	/	/

Auxiliary Cable List and Details			
Cable Description	Length (m)	Shielded/Unshielded	With / Without Ferrite
/	/	/	/

Auxiliary Equipment List and Details			
Description	Manufacturer	Model	Serial Number
/	/	/	/

Notes:

1. *All the equipment/cables were placed in the worst-case configuration to maximize the emission during the test.*
2. *Grounding was established in accordance with the manufacturer's requirements and conditions for the intended use.*
3. *Unless otherwise denoted as EUT in 『Remark』 column , device(s) used in tested system is a support equipment*

8 TEST REQUIREMENTS

8.1 DTS (6DB) BANDWIDTH

8.1.1 Applicable Standard

According to FCC Part15.247 (a)(2) and KDB 558074 D01 15.247 Meas Guidance v05r02

8.1.2 Conformance Limit

The minimum -6 dB bandwidth shall be at least 500 kHz.

8.1.3 Test Configuration

Test according to clause 7.1 radio frequency test setup 1

8.1.4 Test Procedure

The EUT was operating in IEEE 802.11b/g/n mode and controlled its channel. Printed out the test result from the spectrum by hard copy function.
The RF output of EUT was connected to the spectrum analyzer by RF cable and attenuator. The path loss was compensated to the results for each measurement.
Set to the maximum power setting and enable the EUT transmit continuously
Set RBW = 100 kHz.
Set the video bandwidth (VBW) =300kHz.
Set Span=2 times OBW
Set Detector = Peak.
Set Trace mode = max hold.
Set Sweep = auto couple.
Allow the trace to stabilize.
Measure the maximum width of the emission that is constrained by the frequencies associated with the two outermost amplitude points (upper and lower frequencies) that are attenuated by 6 dB relative to the maximum level measured in the fundamental emission.
Measure and record the results in the test report.

8.1.5 Test Results

Temperature:	20℃
Relative Humidity:	49%
ATM Pressure:	1011 mbar

Operation Mode	Channel Number	Channel Frequency (MHz)	Measurement Bandwidth (MHz)	Limit (kHz)	Verdict
802.11b	1	2412	10.11	>500	PASS
	6	2437	10.11	>500	PASS
	11	2462	10.11	>500	PASS
802.11g	1	2412	16.35	>500	PASS
	6	2437	16.34	>500	PASS
	11	2462	16.34	>500	PASS
802.11n (HT20)	1	2412	17.54	>500	PASS
	6	2437	17.07	>500	PASS
	11	2462	17.31	>500	PASS
802.11n (HT40)	3	2422	35.61	>500	PASS
	6	2437	35.67	>500	PASS
	9	2452	35.79	>500	PASS

Test Model	DTS (6dB) Bandwidth 802.11b Channel 1: 2412MHz

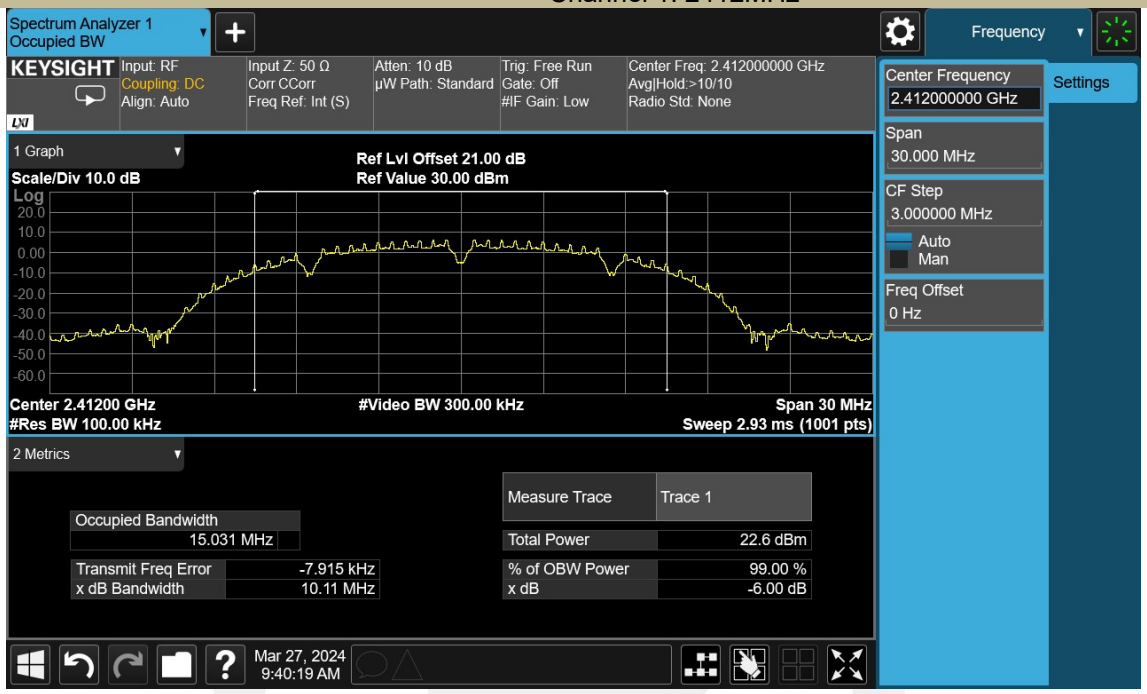

Test Model	DTS (6dB) Bandwidth 802.11b Channel 6: 2437MHz

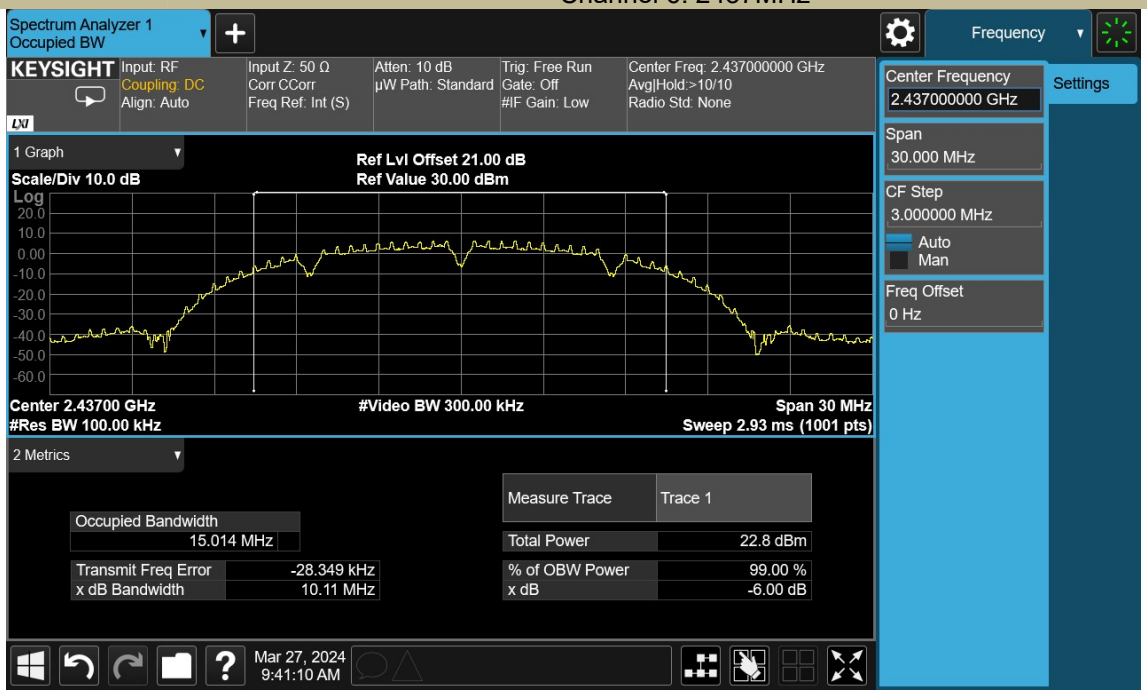

Test Model	DTS (6dB) Bandwidth 802.11b Channel 11: 2462MHz

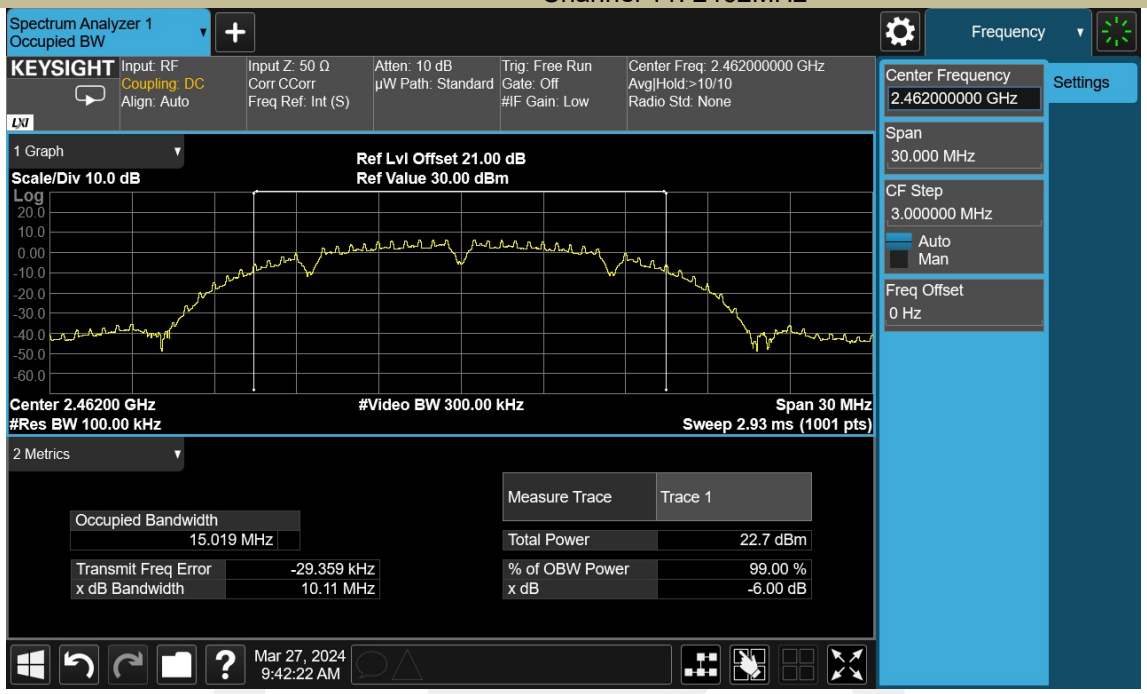

Test Model	DTS (6dB) Bandwidth 802.11g Channel 1: 2412MHz

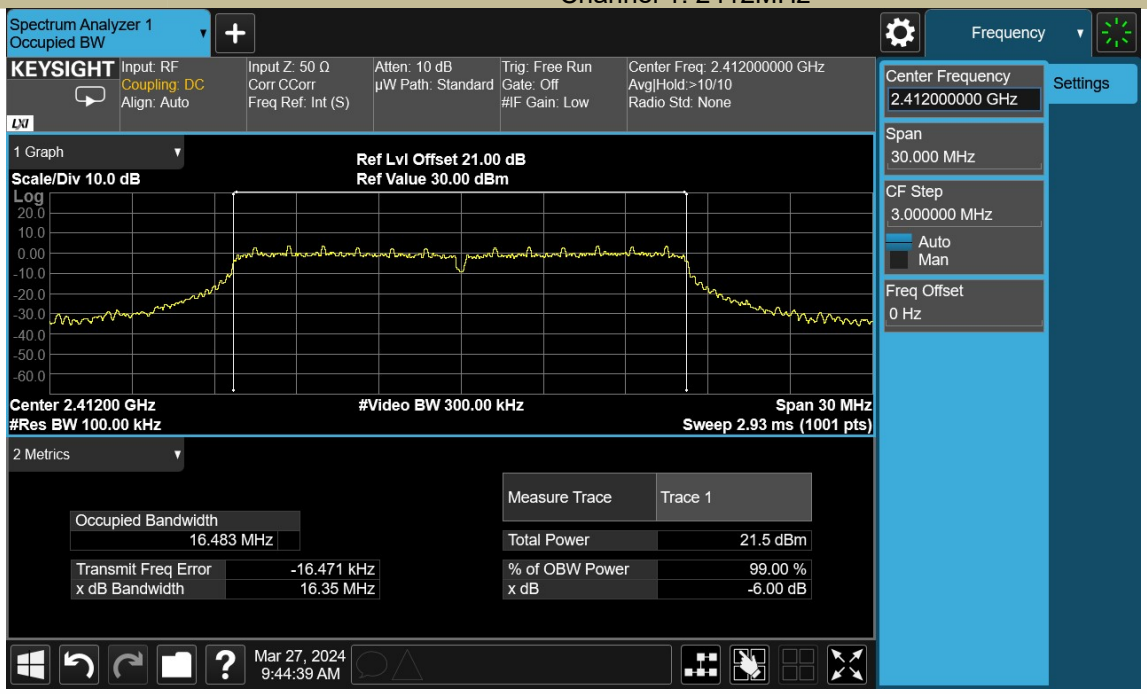

Test Model	DTS (6dB) Bandwidth 802.11g Channel 6: 2437MHz

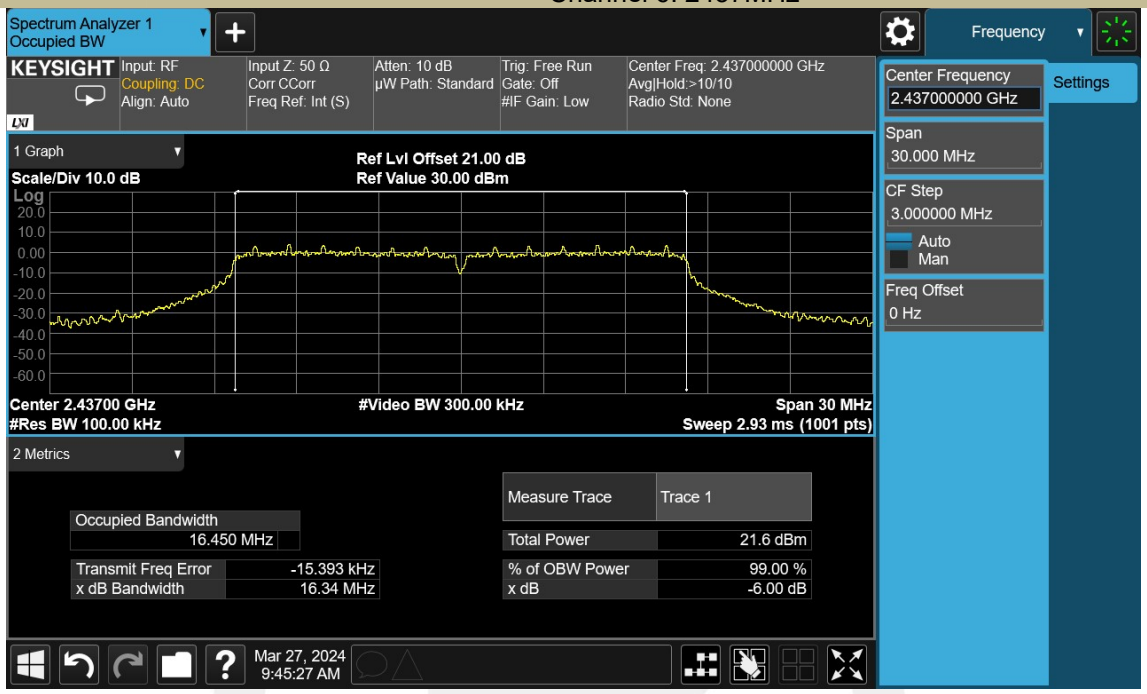

Test Model	DTS (6dB) Bandwidth 802.11g Channel 11: 2462MHz

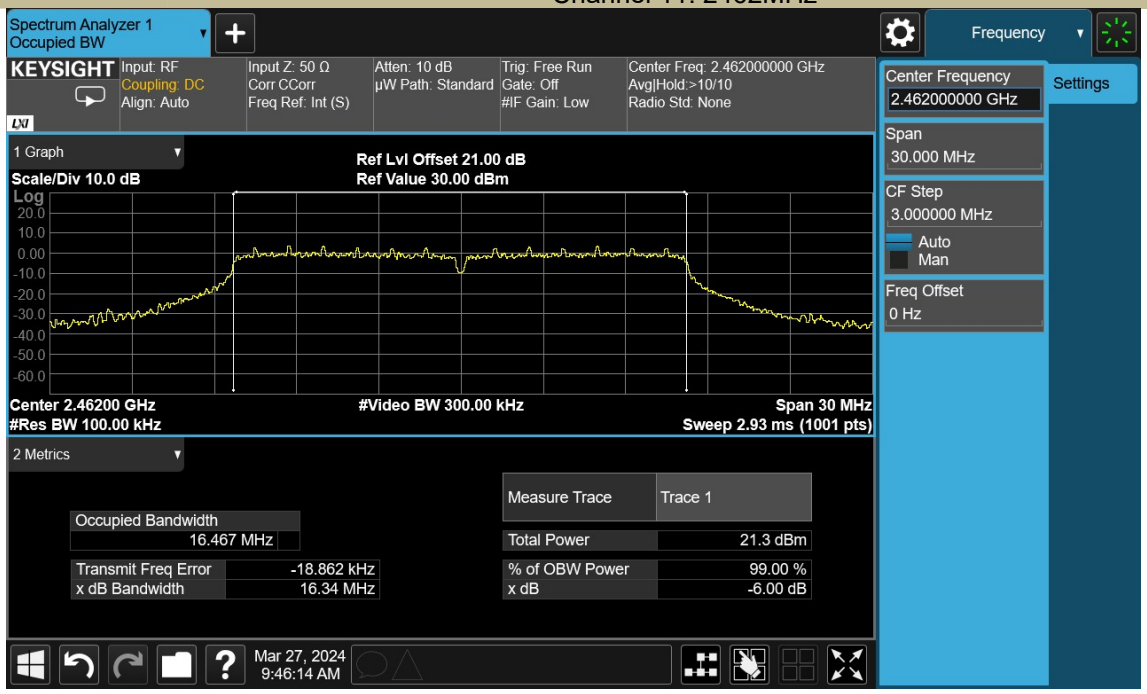

Test Model	DTS (6dB) Bandwidth 802.11n (HT20) Channel 1: 2412MHz

Test Model	DTS (6dB) Bandwidth 802.11n (HT20) Channel 6: 2437MHz

Test Model	DTS (6dB) Bandwidth 802.11n (HT20) Channel 11: 2462MHz

Test Model	DTS (6dB) Bandwidth 802.11n (HT40) Channel 3: 2422MHz

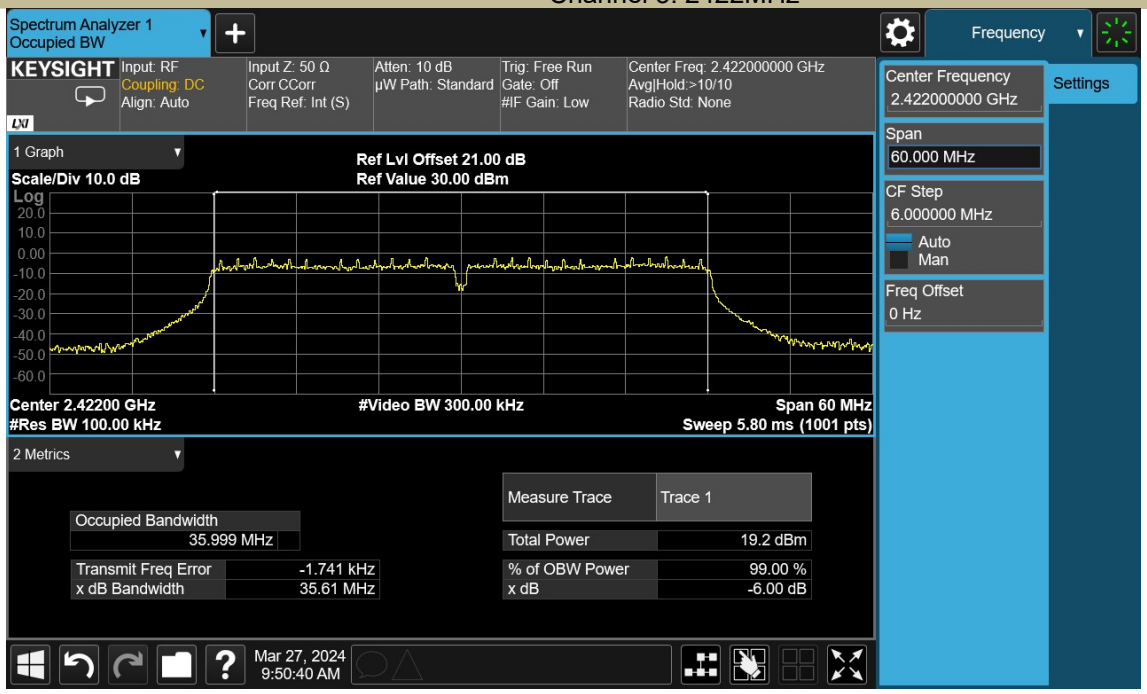

Test Model	DTS (6dB) Bandwidth 802.11n (HT40) Channel 6: 2437MHz

Test Model	DTS (6dB) Bandwidth 802.11n (HT40) Channel 9: 2452MHz

8.2 MAXIMUM CONDUCTED (AVERAGE) OUTPUT POWER

8.2.1 Applicable Standard

According to FCC Part15.247 (b)(3) and KDB 558074 D01 15.247 Meas Guidance v05r02

8.2.2 Conformance Limit

The maximum peak conducted output power of the intentional radiator for systems using digital modulation in the 2400 - 2483.5 MHz bands shall not exceed: 1 Watt (30dBm).

8.2.3 Test Configuration

Test according to clause 7.1 radio frequency test setup 1

8.2.4 Test Procedure

a) Set span to at least 1.5 times the OBW.
b) Set RBW = 1-5% of the OBW, not to exceed 1 MHz.
c) Set VBW ≥ 3 x RBW.
d) Number of points in sweep ≥ 2 × span / RBW. (This gives bin-to-bin spacing ≤ RBW/2, so that narrowband signals are not lost between frequency bins.)
e) Sweep time = auto.
f) Detector = RMS (i.e., power averaging), if available. Otherwise, use sample detector mode.
g) If transmit duty cycle < 98 %, use a sweep trigger with the level set to enable triggering only on full power pulses. The transmitter shall operate at maximum power control level for the entire duration of every sweep. If the EUT transmits continuously (i.e., with no off intervals) or at duty cycle ≥ 98 %, and if each transmission is entirely at the maximum power control level, then the trigger shall be set to "free run".
h) Trace average at least 100 traces in power averaging (i.e., RMS) mode.
i) Compute power by integrating the spectrum across the OBW of the signal using the instrument's band power measurement function, with band limits set equal to the OBW band edges. If the instrument does not have a band power function, sum the spectrum levels (in power units) at intervals equal to the RBW extending across the entire OBW of the spectrum.

8.2.5 Test Results

Temperature:	20℃
Relative Humidity:	49%
ATM Pressure:	1011 mbar

Operation Mode	Channel Number	Channel Frequency (MHz)	Measurement Level (dBm)	Limit (dBm)	Verdict
802.11b	1	2412	15.30	30	PASS
	6	2437	15.52	30	PASS
	11	2462	15.33	30	PASS
802.11g	1	2412	14.22	30	PASS
	6	2437	14.32	30	PASS
	11	2462	14.18	30	PASS
802.11n (HT20)	1	2412	12.82	30	PASS
	6	2437	12.98	30	PASS
	11	2462	12.83	30	PASS
802.11n (HT40)	3	2422	11.41	30	PASS
	6	2437	11.56	30	PASS
	9	2452	11.47	30	PASS

Test Model	Duty cycle 802.11b Channel 1: 2412MHz

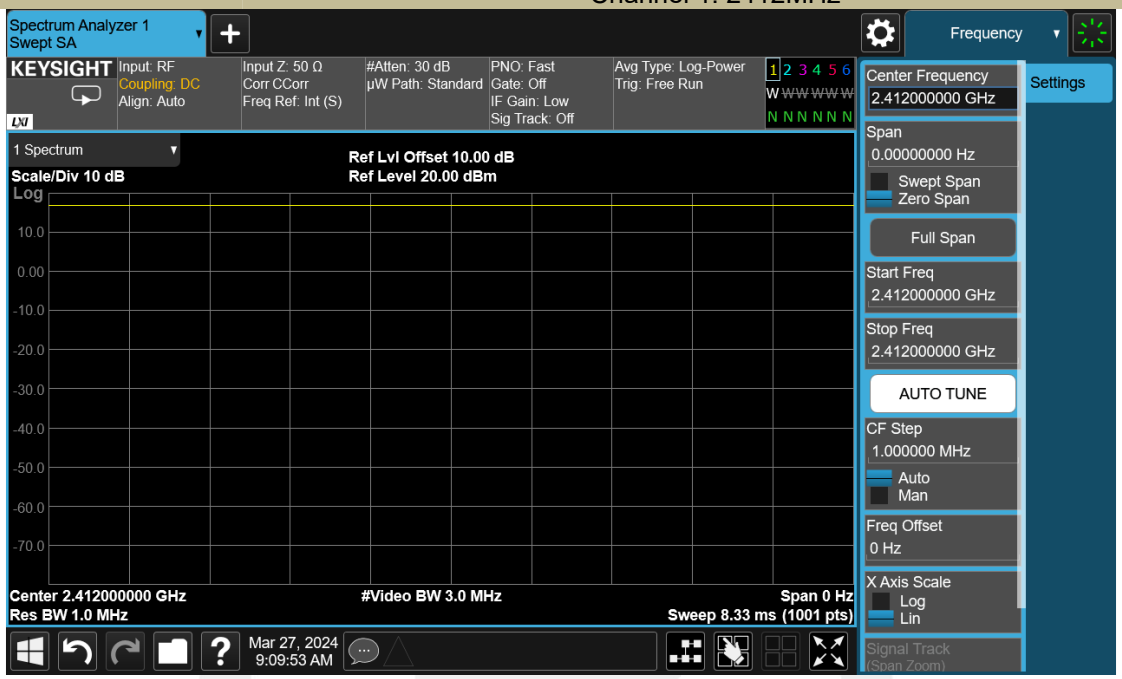

Test Model	Duty cycle 802.11g Channel 1: 2412MHz

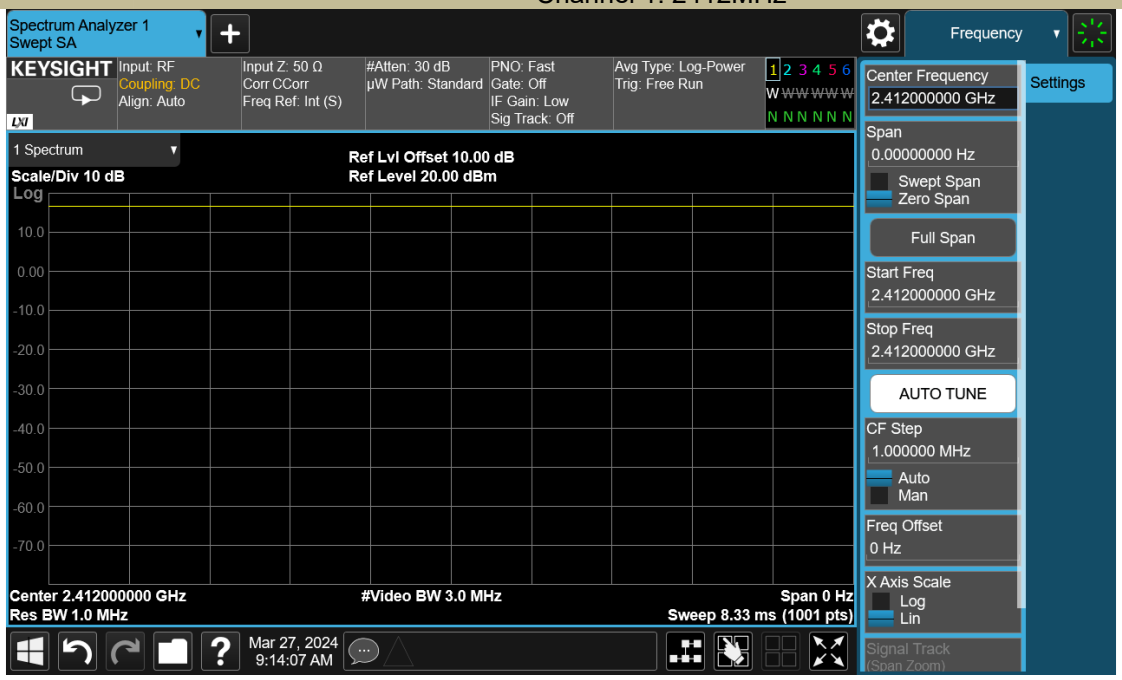

Test Model	Duty cycle 802.11n(HT20) Channel 1: 2412MHz

Test Model	Duty cycle 802.11n(HT40) Channel 3: 2422MHz

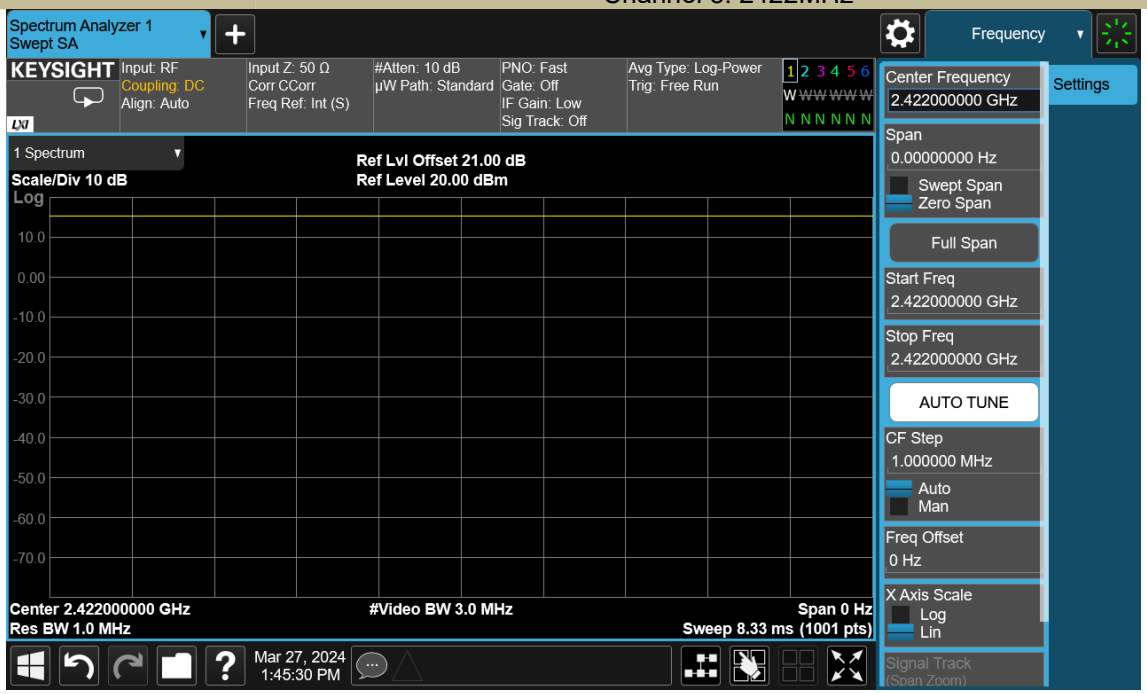

Test Model	MAXIMUM CONDUCTED(AVERAGE) OUTPUT POWER 802.11b Channel 1: 2412MHz

Test Model	MAXIMUM CONDUCTED(AVERAGE) OUTPUT POWER 802.11b Channel 6: 2437MHz

Test Model	MAXIMUM CONDUCTED(AVERAGE) OUTPUT POWER 802.11b Channel 11: 2462MHz

Test Model	MAXIMUM CONDUCTED(AVERAGE) OUTPUT POWER 802.11g Channel 1: 2412MHz

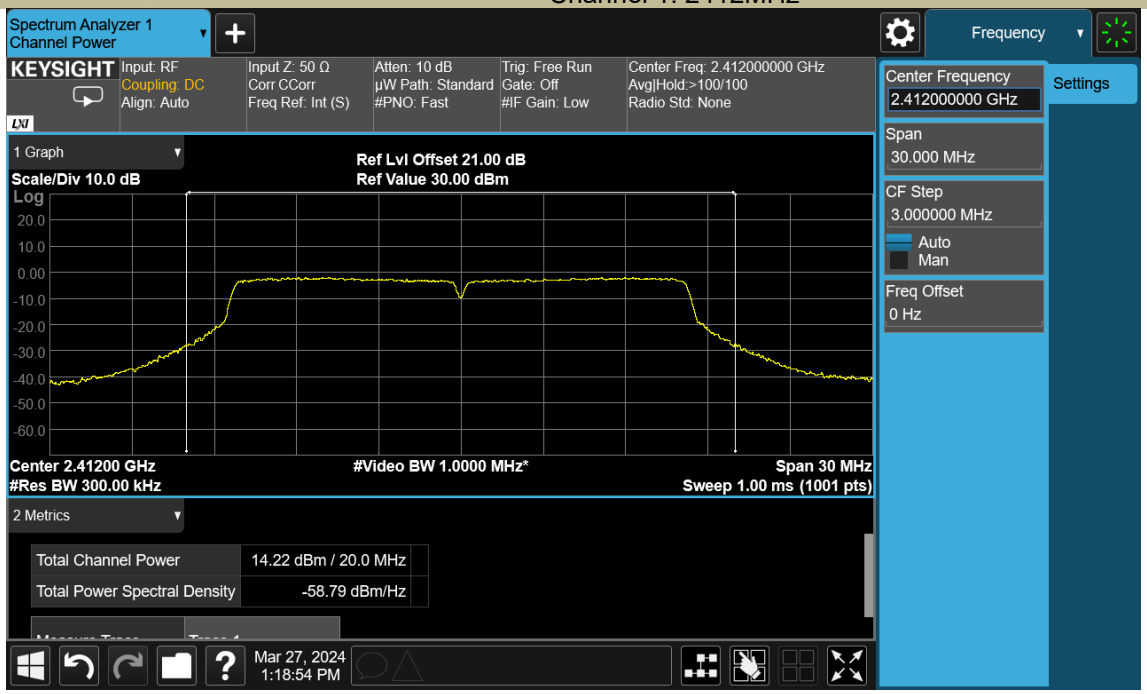

Test Model	MAXIMUM CONDUCTED(AVERAGE) OUTPUT POWER 802.11g Channel 6: 2437MHz

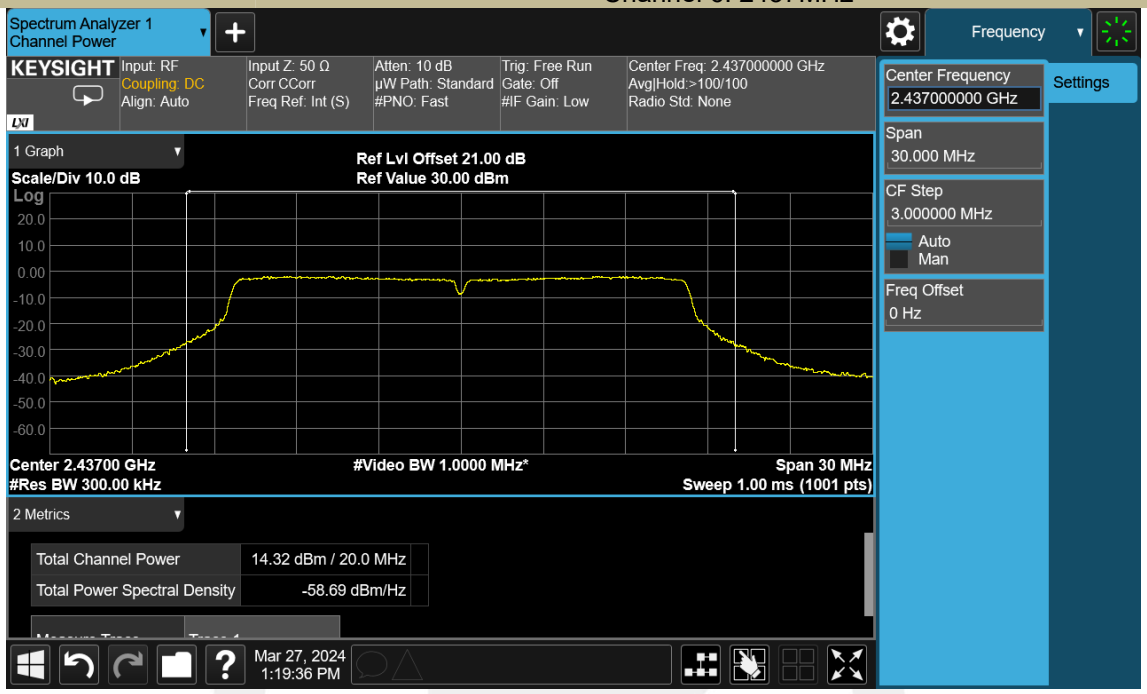

Test Model	MAXIMUM CONDUCTED(AVERAGE) OUTPUT POWER 802.11g Channel 11: 2462MHz

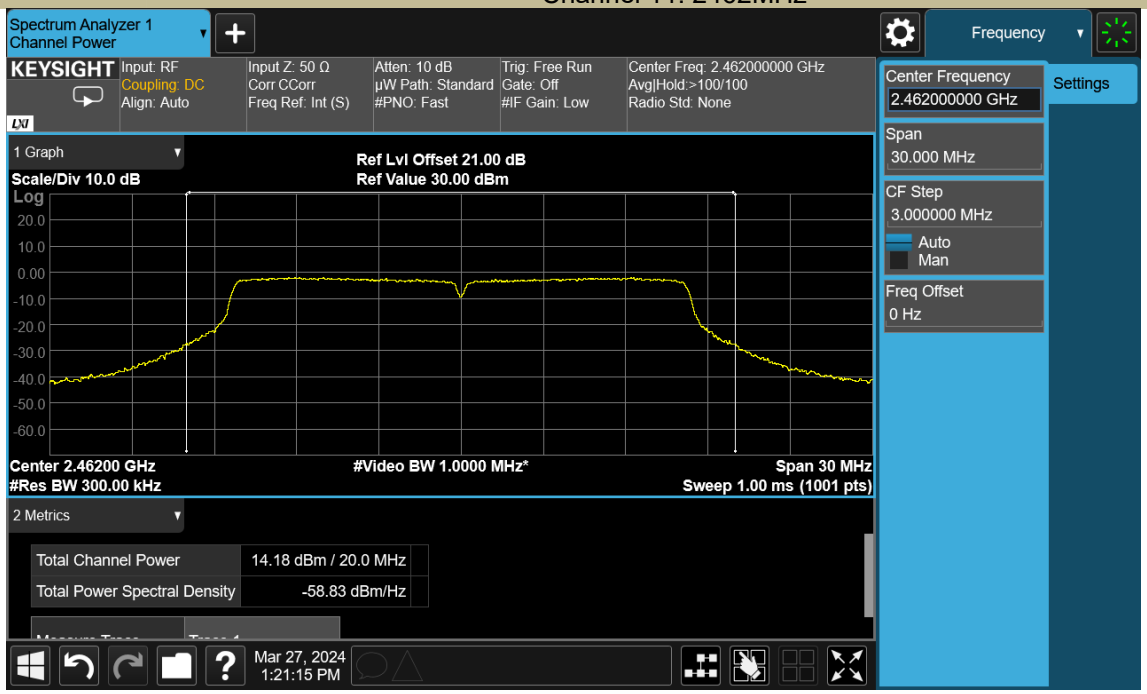

Test Model	MAXIMUM CONDUCTED(AVERAGE) OUTPUT POWER 802.11n(HT20) Channel 1: 2412MHz

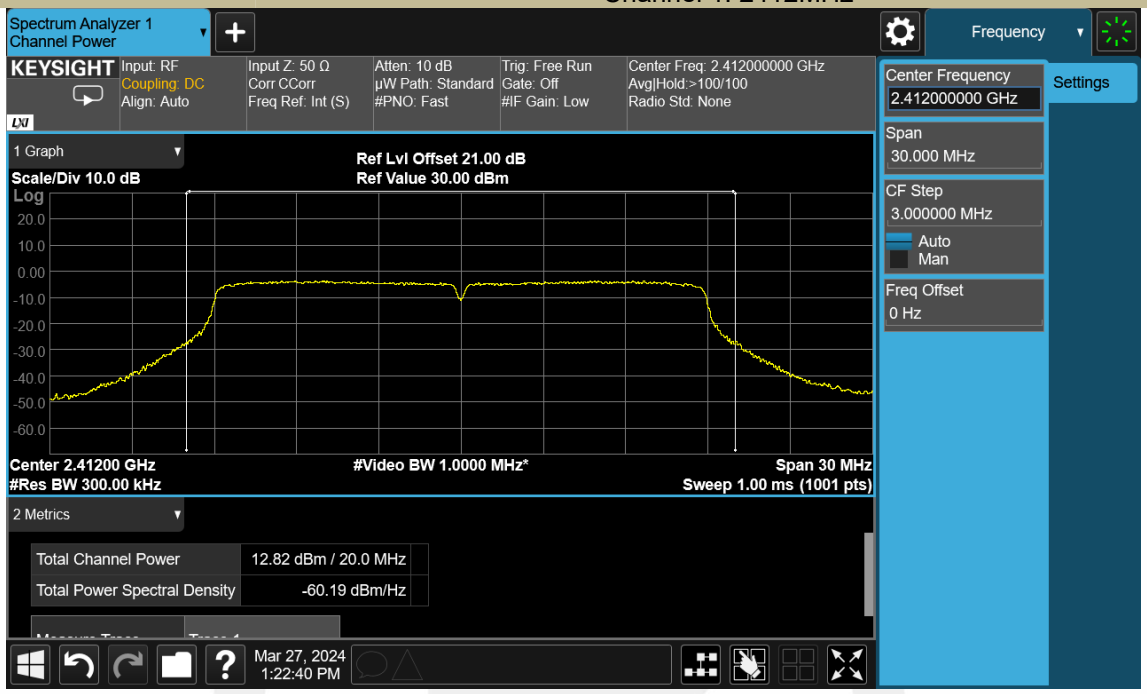

Test Model	MAXIMUM CONDUCTED(AVERAGE) OUTPUT POWER 802.11n(HT20) Channel 6: 2437MHz

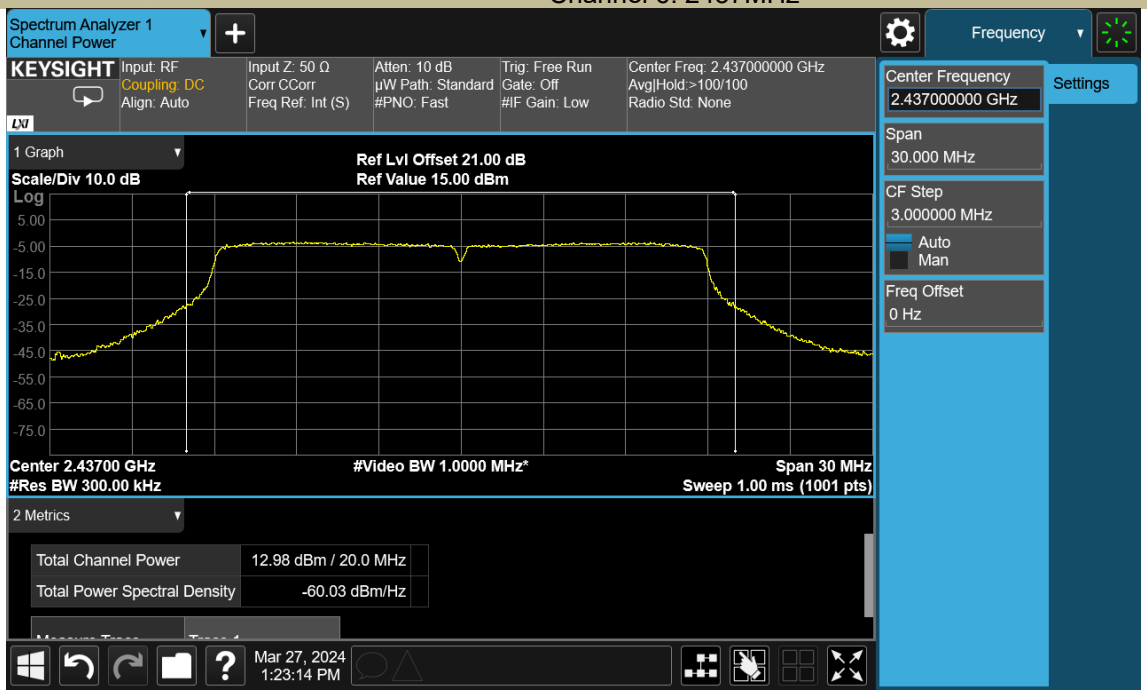

Test Model	MAXIMUM CONDUCTED(AVERAGE) OUTPUT POWER 802.11n(HT20) Channel 11: 2462MHz

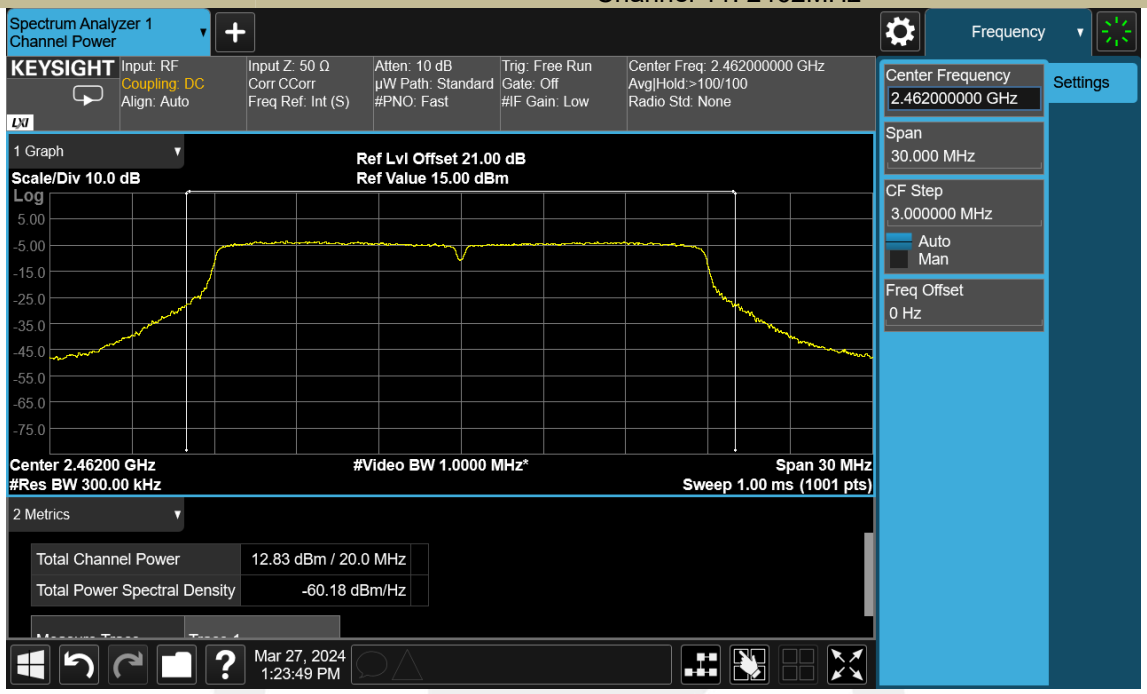
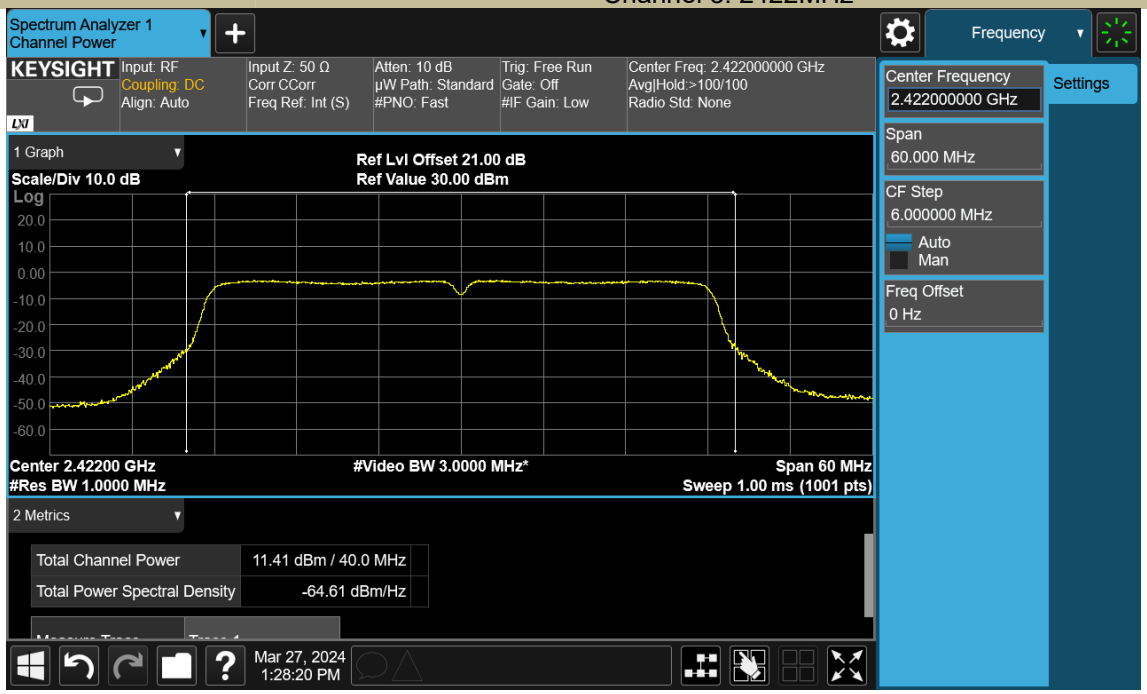
Test Model	MAXIMUM CONDUCTED(AVERAGE) OUTPUT POWER 802.11n(HT40) Channel 3: 2422MHz