EUROFINS ELECTRICAL TESTING SERVICE (SHENZHEN) CO., LTD.

RADIO TEST - REPORT

FCC Compliance Test Report for

Product name: SleepaSloth

Model name: SS-001

FCC ID: 2BF2S-SS-001

Test Report Number: EFGX24030164-IE-05-E01

Eurofins Electrical Testing Service (Shenzhen) Co., Ltd.
1st Floor, Building 2, Chungu, Meisheng Huigu Science and Technology Park,
No. 83 Dabao Road, Bao'an District, Shenzhen. P.R.China

Phone: +86-0755-829118671
Fax: +86-0755-82910749

Content

1	**General Information**	**3**
1.1	Notes	3
1.2	Testing laboratory	4
1.3	Details of applicant	4
1.4	Details of manufacturer	4
1.5	Application details	5
1.6	Test item	5
1.7	Test standards	6
2	**Technical test**	**7**
2.1	Summary of test results	7
2.2	Test environment	7
2.3	Measurement uncertainty	7
2.4	Test mode	8
2.5	Test equipment utilized	9
2.6	Auxiliary equipment used during test	10
2.7	Test software information	10
2.8	Test setup	11
2.9	Test results	13
3	**Technical Requirement**	**14**
3.1	Conducted emission AC power port	14
3.2	Duty cycle	15
3.3	6dB bandwidth	16
3.4	99% Occupied Bandwidth	17
3.5	DTS fundamental emission output power	18
3.6	Power spectral density	21
3.7	Conducted Band Edge & Conducted Spurious Emissions	24
3.8	Spurious emissions & Restricted Band	25
4	**Test Setup Photos**	**28**
5	**External Photos**	**28**
6	**Internal Photos**	**28**
7	**Appendix**	**28**

1 General Information

1.1 Notes

The results of this test report relate exclusively to the item tested as specified in chapter “Description of test item” and are not transferable to any other test items.

Eurofins Electrical Testing Service (Shenzhen) Co., Ltd. is not responsible for any generalisations and conclusions drawn from this report. Any modification of the test item can lead to invalidity of test results and this test report may therefore be not applicable to the modified test item.

The test report may only be reproduced or published in full. Reproducing or publishing extracts of the report requires the prior written approval of the Eurofins Electrical Testing Service (Shenzhen) Co., Ltd.

This document is subject to the General Terms and Conditions and the Testing and Certification System of Eurofins Electrical Testing Service (Shenzhen) Co., Ltd., available on request or accessible at www.eurofins.com.

Operator

2024-05-14		Bruce Zheng / Project Engineer	Bruce Zheng
Date	Eurofins-Lab.	Name / Title	Signature

Technical responsibility for area of testing:

2024-05-14		Albert Xu / Lab Manager	Albert Xu
Date	Eurofins-Lab.	Name / Title	Signature

1.2 Testing laboratory

Eurofins Electrical Testing Service (Shenzhen) Co., Ltd.
1st Floor, Building 2, Chungu, Meisheng Huigu Science and Technology Park, No. 83 Dabao Road, Bao'an District, Shenzhen. P.R.China.
Telephone : +86-755-82911867
Fax : +86-755-82910749
The Laboratory has passed the Accreditation by the American Association for Laboratory Accrediation (A2LA). The Accreditation number is 5376.01
The Laboratory has been listed by industry Canada to perform electromagnetic emission measurements, The CAB identifier is CN0088

1.3 Details of applicant

Name	:	SleepaSloth Ltd
Address	:	2 Hannington Road,LondonSW4ONA,UK
Telephone	:	./.
Fax	:	./.

1.4 Details of manufacturer

Name	:	SleepaSloth Ltd
Address	:	2 Hannington Road,LondonSW4ONA,UK
Telephone	:	./.
Fax	:	./.

1.5 Application details

Date of receipt of application	:	2024-03-14
Date of receipt of test item	:	2024-03-14
Date of test	:	2024-03-14 to 2024-05-14
Date of issue	:	2024-05-14

1.6 Test item

Product type	:	SleepaSloth
Test Model	:	SS-001
Sample ID	:	240314-14-001
Model name	:	SS-001
Brand name	:	SLEEPASLOTH
Serial number	:	./.
Hardware Version	:	3.1
Software / Firmware Version	:	1.0.2
Ratings	:	DC 5V input by USB port; Battery 3.7V
Test voltage	:	3.7Vdc

RadioTechnical data

Radio Tech.	:	WLAN 2.4G
Modulation	:	802.11b(DSSS):CCK,DQPSK,DBPSK 802.11g(OFDM):BPSK,QPSK,16-QAM,64-QAM 802.11n(OFDM):BPSK,QPSK,16-QAM,64-QAM
Antenna type	:	PCB antenna
Maximum antenna gain	:	3.42dBi
Additional information	:	./.

The above sample(s) and sample information was/were submitted and identified on behalf of the applicant.
Eurofins assures objectivity and impartiality of the test, and fulfills the obligation of confidentiality for applicant's commercial information and technical documents.

1.7 Test standards

Test Standards	
FCC Part 15 Subpart C	PART 15 - RADIO FREQUENCY DEVICES Subpart C - Intentional Radiators

Test Method

1: ANSI C63.4-2014, American National Standard for Methods of Measurement of Radio-Noise Emissions from Low-Voltage Electrical and Electronic Equipment in the Range of 9 kHz to 40 GHz.
2: ANSI C63.10-2013, American National Standard for Testing Unlicensed Wireless Devices.
3: KDB558074 D01 15.247 Meas Guidance v05r02

2 Technical test

2.1 Summary of test results

No deviations from the technical specification(s) were ascertained in the course of the tests performed. ☒

or

The deviations as specified were ascertained in the course of the tests performed. ☐

2.2 Test environment

Ac line conducted

Enviroment Parameter	Temperature ℃	Relative Humidity
101.4 kPa	23.7	51.9%

RF Conducted

Enviroment Parameter	Temperature℃	Relative Humidity
101.4 kPa	24.6	62.9%

Radiated

Enviroment Parameter	Temperature℃	Relative Humidity
101.4 kPa	24.7	53.7%

2.3 Measurement uncertainty

The uncertainty is calculated using the methods suggested in the "Guide to the Expression of Uncertainty in Measurement" (GUM) published by ISO.

System Measurement Uncertainty	
Test Items	Extended Uncertainty
Uncertainty in conducted measurements	1.96dB
Uncertainty for Conducted RF test	RF Power Conducted: 1.16dB Frequency test involved: 1.05×10-7 or 1%
Uncertainty for Radiated Emission 9KHz-30MHz	4.56dB
Uncertainty for Radiated Spurious Emission 30MHz-3000MHz	Horizontal: 4.46dB; Vertical: 4.54dB;
Uncertainty for Radiated Spurious Emission 3000MHz-18000MHz	Horizontal: 4.42dB; Vertical: 4.41dB;
Uncertainty for Radiated Spurious Emission 18000MHz-40000MHz	Horizontal: 4.63dB; Vertical: 4.62dB;

2.4 Test mode

Operation Frequency each of channel(802.11b/g/n HT 20)							
Channel	Frequency	Channel	Frequency	Channel	Frequency	Chan-nel	Fre-quency
1	2412MHz	4	2427MHz	7	2442MHz	10	2457MHz
2	2417MHz	5	2432MHz	8	2447MHz	11	2462MHz
3	2422MHz	6	2437MHz	9	2452MHz		

Operation Frequency each of channel(802.11n HT 40)							
Channel	Frequency	Channel	Frequency	Channel	Frequency	Channel	Fre-quency
--	--	4	2427MHz	7	2442MHz	--	--
--	--	5	2432MHz	8	2447MHz	--	--
3	2422MHz	6	2437MHz	9	2452MHz	--	--

For 802.11b/g n(HT20) (2.4GHz band), the lowest, middle, highest channel numbers of the EUT used and tested in this report are separately 1 (2412MHz), 6 (2437MHz) and 11 (2462MHz).

For 802.11n(HT40)(2.4GHz band), the lowest, middle, highest channel numbers of the EUT used and tested in this report are separately 3 (2412MHz), 6 (2437MHz) and 9 (2452MHz).

2.5 Test equipment utilized

EQUIPMENT ID	EQUIPMENT NAME	MODEL NO.	CAL. DUE DATE
23-2-13-05	EMI Test Receiver	ESR3	2025-03-25
23-2-13-06	LISN	NNLK 8127 RC	2025-03-25
23-2-10-16	Attenuator	VTSD 9561-F	2025-03-25
23-2-10-63	Temperature & Humidity Meter	COS-03	2025-03-25
23-2-10-65	Barometer	Baro	2025-03-25
23-2-13-12	Signal Analyzer	N9010B-544	2025-03-25
23-2-13-13	BT/WLAN Tester	CMW270	2025-03-25
23-2-13-14	Signal Generator	N5183B-520	2025-03-25
23-2-13-15	Vector Signal Generator	N5182B-506	2025-03-25
23-2-10-43	Switch and Control Unit	ERIT-E-JS0806-2	2025-03-25
23-2-10-44	DC power supply	E3642A	2025-03-25
23-2-10-45	Temperature test chamber	SG-80-CC-2	2025-03-25
23-2-10-50	Temperature & Humidity Meter	COS-03	2025-03-25
23-2-10-66	Barometer	Baro	2025-03-25
23-2-13-01	EMI Test Receiver	ESR7	2025-03-25
23-2-13-02	Signal Analyzer	N9020B-544	2025-03-25
23-2-12-01	Active Loop Antenna	FMZB 1519B	2024-05-29
23-2-12-02	TRILOG Broadband Antenna	VULB9168	2024-05-29
23-2-12-03	Horn Antenna	3117	2024-05-29
23-2-12-04	Horn Antenna	BBHA 9170	2024-05-29
23-2-10-01	Preamplifier	BBV9745	2025-03-25
23-2-10-02	Preamplifier	TAP01018048	2025-03-25
23-2-10-03	Preamplifier	TAP18040048	2025-03-25
23-2-10-62	Temperature & Humidity Meter	COS-03	2025-03-25
23-2-10-64	Barometer	Baro	2025-03-25
23-2-10-14	Switch and Control Unit	ERIT-E-JS0806-SF1	N/A
23-2-13-03	EMI Test Receiver	ESR7	2025-03-25
23-2-13-04	Signal Analyzer	N9020B-526	2025-03-25
23-2-12-06	Active Loop Antenna	FMZB 1519B	2024-05-05
23-2-12-07	TRILOG Broadband Antenna	VULB9168	2024-05-05
23-2-12-08	Horn Antenna	3117	2024-05-05
23-2-10-46	Preamplifier	BBV9745	2025-03-25
23-2-10-47	Preamplifier	TAP01018048	2025-03-25
23-2-10-61	Temperature & Humidity Meter	COS-03	2025-03-25
23-2-10-52	Barometer	Baro	2025-03-25
23-2-10-15	Switch and Control Unit	ERIT-E-JS0806-SF1	N/A

2.6 Auxiliary equipment used during test

DESCRIPTION	MANUFACTURER	MODEL NO.	S/N
Laptop	LENOVO	TP00096A	PF-1QH0LV

2.7 Test software information

Test Software&Version	ESP RF TEST TOOL			
Mode	Power setting			Rate
802.11b	CH1	CH6	CH11	1Mbit
	BK30	BK30	BK30	
802.11g	CH1	CH6	CH11	6Mbit
	BK30	BK30	BK30	
802.11n HT20	CH1	CH6	CH11	MCS0-6.5Mbit
	BK30	BK30	BK30	
802.11n HT40	CH3	CH6	CH9	MCS0-6.5Mbit
	BK30	BK30	BK30	

2.8 Test setup

Ac line conducted

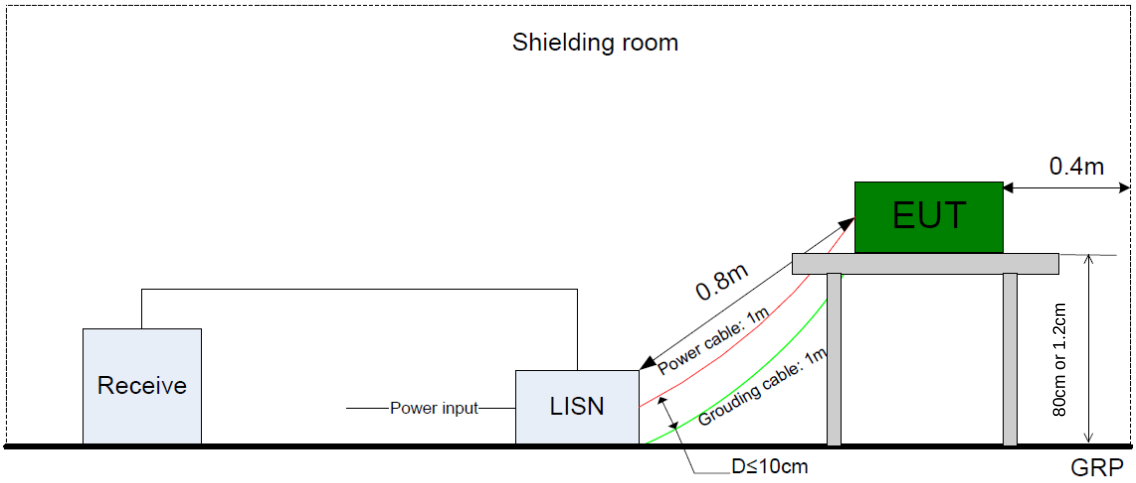

RF Conducted tests

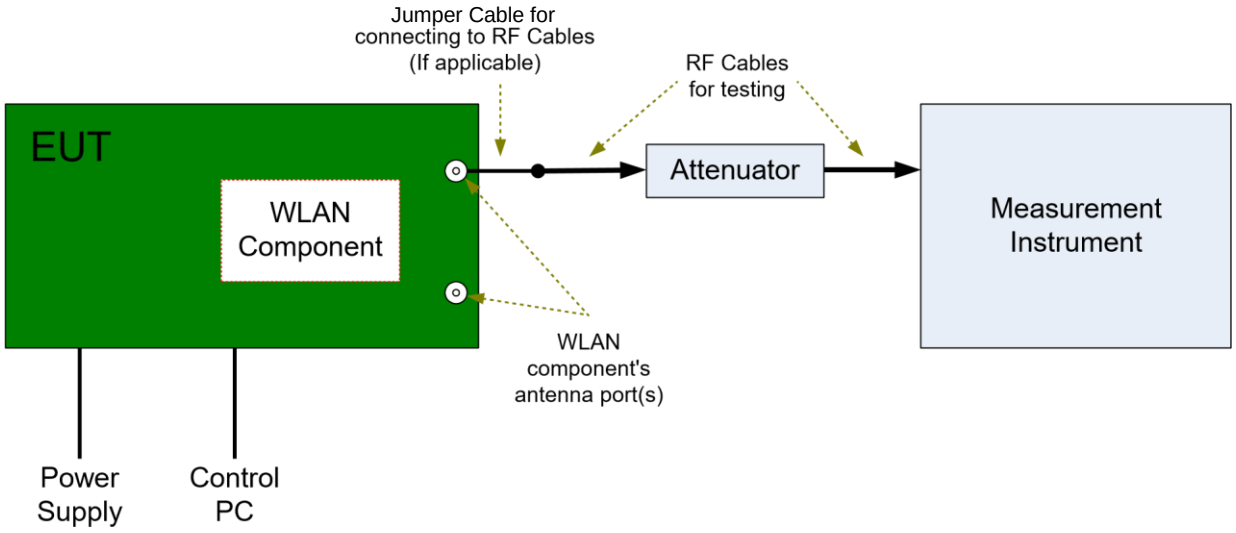

Radiated tests below 30MHz

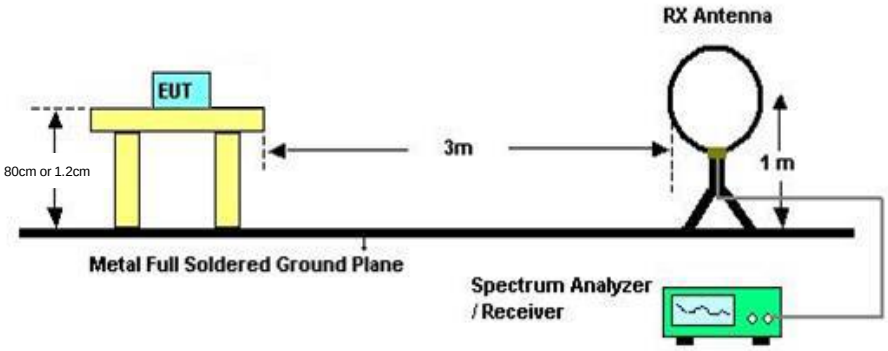

Radiated tests below 1GHz

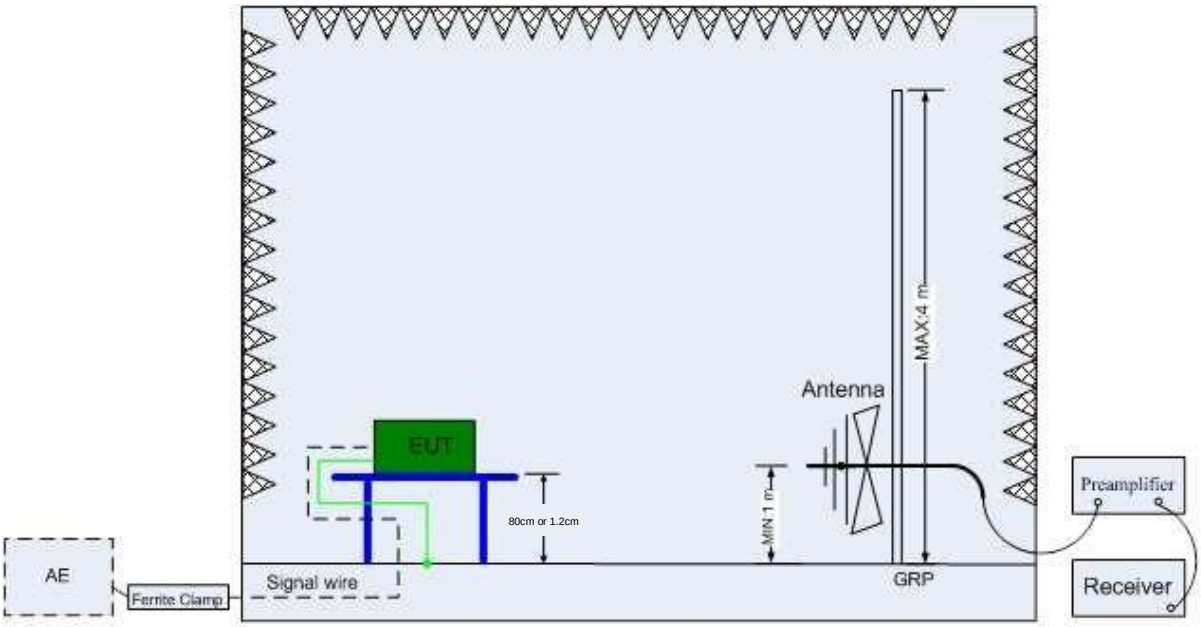

Radiated tests above 1GHz

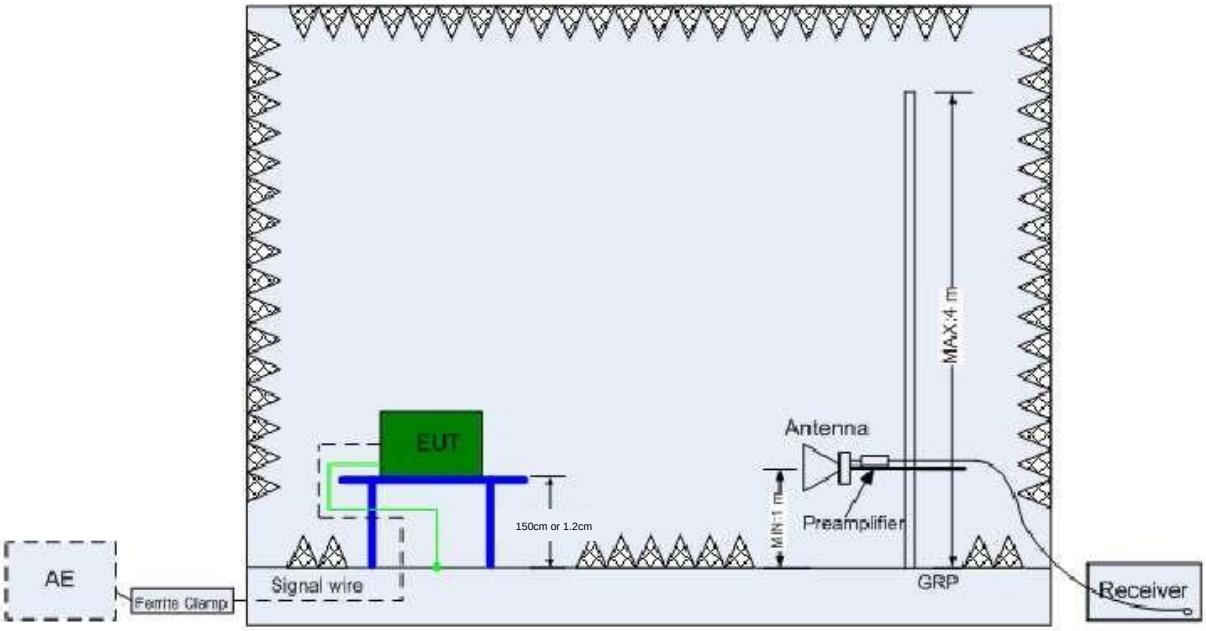

2.9 Test results

☒ 1st test ☐ test after modification ☐ production test

Technical Requirements					
FCC Part 15 Subpart C					
Test Condition			Test Result	Verdict	Test Site
§15.207	RSS-GEN 8.8	Conducted emission AC power port	Appendix J	Pass	Site 1
§15.247(b)(1)	RSS-247 Clause 5.4(b)	Conducted output power for FHSS	--	N/A	--
§15.247(b)(3)	RSS-247 Clause 5.4(d)	Conducted output power for DTS	Appendix C	Pass	Site 1
§15.247(e)	RSS-247 Clause 5.2(b)	Power spectral density	Appendix D	Pass	Site 1
§15.247(a)(2)	RSS-247 Clause 5.2(a)	6dB bandwidth	Appendix A	Pass	Site 1
§15.247(a)(1)	RSS-247 Clause 5.1(a)	20dB Occupied bandwidth	--	N/A	--
--	RSS-GEN 6.7	99% Occupied Bandwidth	Appendix B	Pass	Site 1
§15.247(a)(1)	RSS-247 Clause 5.1(b)	Carrier frequency separation	--	N/A	--
§15.247(a)(1)(iii)	RSS-247 Clause 5.1(d)	Number of hopping frequencies	--	N/A	--
§15.247(a)(1)(iii)	RSS-247 Clause 5.1(d)	Dwell Time	--	N/A	--
§15.247(d)	RSS-247 Clause 5.5	Conducted Band Edge & Conducted Spurious Emissions	Appendix E Appendix F	Pass	Site 1
§15.209 & §15.205	RSS-GEN 8.9 RSS-GEN 8.10	Spurious emissions , Band edge & Restricted Band	Appendix H Appendix I	Pass	Site 1
--	--	Duty cycle	Appendix G	Pass	Pass
§15.203	RSS-GEN 6.8	Antenna requirement	See note 1	Pass	--

Remark 1: N/A – Not Applicable.
Note 1: The EUT uses PCB antenna. According to §15.203/ RSS-GEN 6.8, it is considered sufficiently to comply with the provisions of this section.

3 Technical Requirement

3.1 Conducted emission AC power port

Test Method:
The test method was refered to the subclause 6.2 of ANSI C63.10-2013.

The EUT is placed on a non-conducting table 40 cm from the vertical ground plane and 80 cm above the horizontal ground plane. The EUT is configured in accordance with ANSI C63.10.

The receiver is set to a resolution bandwidth of 9 kHz. Peak detection is used unless otherwise noted as quasi-peak or average.

Line conducted data is recorded for both Neutral and Live lines.

Limit:

FCC §15.207 (a)

RSS-Gen 8.8

Frequency	QP Limit	AV Limit
MHz	**dBµV**	**dBµV**
0.150-0.500	66-56*	56-46*
0.500-5	56	46
5-30	60	50

Decreasing linear.

3.2 Duty cycle

Test Method:
The test method was refered to the subclause 11.6 of ANSI C63.10-2013.

Measurements of duty cycle and transmission duration shall be performed using one of the following techniques:

a) A diode detector and an oscilloscope that together have a sufficiently short response time to permit accurate measurements of the ON and OFF times of the transmitted signal.

b) The zero-span mode on a spectrum analyzer or EMI receiver if the response time and spacing between bins on the sweep are sufficient to permit accurate measurements of the ON and OFF times of the transmitted signal:

   1) Set the center frequency of the instrument to the center frequency of the transmission.

   2) Set RBW ≧ OBW if possible; otherwise, set RBW to the largest available value.

   3) Set VBW ≧ RBW. Set detector = peak or average.

   4) The zero-span measurement method shall not be used unless both RBW and VBW are > 50/*T* and the number of sweep points across duration *T* exceeds 100. (For example, if VBW and/or RBW are limited to 3 MHz, then the zero-span method of measuring the duty cycle shall not be used if *T* ≤16.7 μs.)

Limit:

None; for reporting purposes only.

3.3 6dB bandwidth

Test Method:
The test method was refered to the subclause 11.8 of ANSI C63.10-2013.

Option 1

The steps for the first option are as follows:

a) Set RBW = 100 kHz.

b) Set the VBW ≧ [3 × RBW].

c) Detector = peak.

d) Trace mode = max hold.

e) Sweep = auto couple.

f) Allow the trace to stabilize.

g) Measure the maximum width of the emission that is constrained by the frequencies associated with the two outermost amplitude points (upper and lower frequencies) that are attenuated by 6 dB relative to the maximum level measured in the fundamental emission.

Option 2

The automatic bandwidth measurement capability of an instrument may be employed using the X dB bandwidth mode with X set to 6 dB, if the functionality described in Option 1 (i.e., RBW = 100 kHz, VBW ≧ 3 × RBW, and peak detector with maximum hold) is implemented by the instrumentation function. When using this capability, care shall be taken so that the bandwidth measurement is not influenced by any intermediate power nulls in the fundamental emission that might be ≧6 dB.

Limit:

FCC §15.407 (e)

RSS-247 5.2 (a)

The minimum 6 dB bandwidth shall be at least 500 kHz.

3.4 99% Occupied Bandwidth

Test Method:
The test method was refered to the subclause 6.9.3 of ANSI C63.10-2013.

The occupied bandwidth is the frequency bandwidth such that, below its lower and above its upper frequency limits, the mean powers are each equal to 0.5% of the total mean power of the given emission. The following procedure shall be used for measuring 99% power bandwidth:

a) The instrument center frequency is set to the nominal EUT channel center frequency. The frequency span for the spectrum analyzer shall be between 1.5 times and 5.0 times the OBW.

b) The nominal IF filter bandwidth (3 dB RBW) shall be in the range of 1% to 5% of the OBW, and VBW shall be approximately three times the RBW, unless otherwise specified by the applicable requirement.

c) Set the reference level of the instrument as required, keeping the signal from exceeding the maximum input mixer level for linear operation. In general, the peak of the spectral envelope shall be more than [10 log (OBW/RBW)] below the reference level. Specific guidance is given in 4.1.5.2.

d) Step a) through step c) might require iteration to adjust within the specified range.

e) Video averaging is not permitted. Where practical, a sample detection and single sweep mode shall be used. Otherwise, peak detection and max hold mode (until the trace stabilizes) shall be used.

f) Use the 99% power bandwidth function of the instrument (if available) and report the measured bandwidth.

g) If the instrument does not have a 99% power bandwidth function, then the trace data points are recovered and directly summed in linear power terms. The recovered amplitude data points, beginning at the lowest frequency, are placed in a running sum until 0.5% of the total is reached; that frequency is recorded as the lower frequency. The process is repeated until 99.5% of the total is reached; that frequency is recorded as the upper frequency. The 99% power bandwidth is the difference between these two frequencies.

h) The occupied bandwidth shall be reported by providing plot(s) of the measuring instrument display; the plot axes and the scale units per division shall be clearly labeled. Tabular data may be reported in addition to the plot(s).

Limit:

None; for reporting purposes only.

3.5 DTS fundamental emission output power

Test Method
The test method was refered to the subclause 11.9.2.2 of ANSI C63.10-2013.

Selection of test method
The proper test method is selected based on the following criteria:

a) **Method AVGSA-1** shall be applied if either of the following conditions can be satisfied:

   a The EUT transmits continuously (or with a *D* ≧98%).

   b Sweep triggering can be implemented in such a way that the device transmits at the maximum power control level throughout the duration of each of the instrument

   sweeps to be averaged. This condition can generally be achieved by triggering the instrument's sweep if the duration of the sweep (with the instrument configured as in method AVGSA-1) is equal to or shorter than the duration *T* of each transmission from the EUT, and if those transmissions exhibit full power throughout their durations.

b) **Method AVGSA-2** shall be applied if the conditions of the preceding item a) cannot be achieved and the transmissions exhibit a constant duty cycle during the measurement duration. Duty cycle will be considered to be constant if variations are less than ±2%.

c) **Method AVGSA-3** shall be applied if the conditions of the preceding item a) and item b) cannot be achieved.

Method AVGSA-1

Method AVGSA-1 uses trace averaging with the EUT transmitting at full power throughout each sweep. The procedure for this method is as follows:

a) Set span to at least 1.5 times the OBW.

b) Set RBW = 1% to 5% of the OBW, not to exceed 1 MHz.

c) Set VBW ≧[3 × RBW].

d) Number of points in sweep ≧[2 × span / RBW]. (This gives bin-to-bin spacing ≦RBW / 2, so that narrowband signals are not lost between frequency bins.)

e) Sweep time = auto.

f) Detector = RMS (i.e., power averaging), if available. Otherwise, use sample detector mode.

g) If transmit duty cycle < 98%, use a sweep trigger with the level set to enable triggering only on full power pulses. The transmitter shall operate at the maximum power control level for the entire duration of every sweep. If the EUT transmits continuously (i.e., with no OFF intervals) or at duty cycle ≧98%, and if each transmission is entirely at the maximum power control level, then the trigger shall be set to "free run."

h) Trace average at least 100 traces in power averaging (rms) mode.

i) Compute power by integrating the spectrum across the OBW of the signal using the instrument's band power measurement function, with band limits set equal to the OBW band

edges. If the instrument does not have a band power function, sum the spectrum levels (in power units) at intervals equal to the RBW extending across the entire OBW of the spectrum.

Method AVGSA-2

Method AVGSA-2 uses trace averaging across ON and OFF times of the EUT transmissions, followed by duty cycle correction. The procedure for this method is as follows:

a) Measure the duty cycle *D* of the transmitter output signal as described in 11.6.

b) Set span to at least 1.5 times the OBW.

c) Set RBW = 1% to 5% of the OBW, not to exceed 1 MHz.

d) Set VBW ≧[3 × RBW].

e) Number of points in sweep ≧[2 × span / RBW]. (This gives bin-to-bin spacing ≦RBW / 2, so that narrowband signals are not lost between frequency bins.)

f) Sweep time = auto.

g) Detector = RMS (i.e., power averaging), if available. Otherwise, use the sample detector mode.

h) Do not use sweep triggering. Allow the sweep to “free run.”

i) Trace average at least 100 traces in power averaging (rms) mode; however, the number of traces to be averaged shall be increased above 100 as needed such that the average accurately represents the true average over the ON and OFF periods of the transmitter.

j) Compute power by integrating the spectrum across the OBW of the signal using the instrument’s band power measurement function with band limits set equal to the OBW band edges. If the instrument does not have a band power function, then sum the spectrum levels (in power units) at intervals equal to the RBW extending across the entire OBW of the spectrum.

k) Add [10 log (1 / *D*)], where *D* is the duty cycle, to the measured power to compute the average power during the actual transmission times (because the measurement represents an average over both the ON and OFF times of the transmission). For example, add [10 log (1/0.25)] = 6 dB if the duty cycle is 25%.

Method AVGSA-3

Method AVGSA-3 uses rms detection across ON and OFF times of the EUT with max hold. The procedure for this method is as follows:

a) Set span to at least 1.5 times the OBW.

b) Set sweep trigger to “free run.”

c) Set RBW = 1% to 5% of the OBW, not to exceed 1 MHz.

d) Set VBW ≧[3 × RBW].

e) Number of points in sweep ≧[2 × span / RBW]. (This gives bin-to-bin spacing ≦RBW / 2, so that narrowband signals are not lost between frequency bins.)

f) Sweep time ≦(number of points in sweep) × *T*, where *T* is defined in 11.6. If this gives a sweep time less than the auto sweep time of the instrument, then method AVGSA-3 shall not be used (use AVGSA-3A). The purpose of this step is so that the averaging time in each bin is less than or equal to the minimum time of a transmission.

g) Detector = RMS (power averaging).

h) Trace mode = max hold.

i) Allow max hold to run for at least 60 s or longer as needed to allow the trace to stabilize.

j) Compute power by integrating the spectrum across the OBW of the signal using the instrument's band power measurement function with band limits set equal to the OBW band edges. If the instrument does not have a band power function, then sum the spectrum levels (in power units) at intervals equal to the RBW extending across the entire OBW.

Limits:

FCC §15.247 (b) (3)
For systems using digital modulation in the 902-928 MHz, 2400-2483.5 MHz, and 5725-5850 MHz bands: 1 Watt.

RSS-247 Clause 5.4 (d)
For DTSs employing digital modulation techniques operating in the bands 902-928 MHz and 2400-2483.5 MHz, the maximum conducted output power shall not exceed 1 W. The e.i.r.p. shall not exceed 4 W, except as provided in section 5.4(e).

3.6 Power spectral density

Test Method:
The test method was refered to the subclause 11.10 of ANSI C63.10-2013.

Selection of applicable test method
Some regulatory requirements specify a conducted PSD limit within the *DTS bandwidth* during any time interval of continuous transmission. Such specifications require that the same method as used to determine the conducted output power shall be used to determine the power spectral density. If maximum peak conducted output power was measured, then the peak PSD procedure 11.10.2 (method PKPSD) shall be used. If maximum conducted output power was measured, then one of the average PSD procedures shall be used, as applicable based on the following criteria (the peak PSD procedure is also an acceptable option):

a) **Method AVGPSD-1** shall be applied if either of the following conditions can be satisfied:

   1) The EUT transmits continuously (or with a $D \geqq 98\%$).

   2) Sweep triggering can be implemented in such a way that the device transmits at the maximum power control level throughout the duration of each of the instrument sweeps to be averaged. This condition can generally be achieved by triggering the instrument's sweep if the duration of the sweep is equal to or shorter than the duration *T* of each transmission from the EUT, and if those transmissions exhibit full power throughout these durations.

b) **Method AVGPSD-2** or **method AVGPSD-2A (alternative)** shall be applied if the conditions of the preceding item a) cannot be achieved, and the transmissions exhibit a constant duty cycle during the measurement duration. Duty cycle will be considered to be constant if variations are less than ±2%.

c) **Method AVGPSD-3** or **method AVGPSD-3A (alternative)** shall be applied if the conditions of the preceding paragraphs a) and b) cannot be achieved.

If the average PSD is measured with a power averaging (rms) detector or a sample detector, then the instrument shall be capable of using several measurement points in each sweep that is greater than or equal to twice the span / RBW, to set a bin-to-bin spacing of ≦RBW / 2, so that narrowband signals are not lost between frequency bins.

Where the measured power (peak conducted output power or maximum conducted output power) complies with the regulatory requirement for the PSD, then measurement of PSD is not required, provided that the PSD level is reported as being equal to the measured output power.

Method AVGPSD-1

Method AVGPSD-1 uses trace averaging with EUT transmitting at full power throughout each sweep.

The following procedure may be used when the maximum (average) conducted output power was used to determine compliance to the fundamental output power limit. This is the baseline method for determining the maximum (average) conducted PSD level. If the instrument has a power averaging (rms) detector, then it must be used; otherwise, use the sample detector. The EUT must be configured to transmit continuously ($D \geqq 98\%$), or else sweep triggering/signal gating must be implemented to ensure that measurements are made only when the EUT is transmitting at its maximum power control level (no transmitter OFF time to be considered):

a) Set instrument center frequency to DTS channel center frequency.

b) Set span to at least 1.5 times the OBW.

c) Set RBW to: 3 kHz ≦RBW ≦100 kHz.

d) Set VBW ≧[3 × RBW].

e) Detector = power averaging (rms) or sample detector (when rms not available).

f) Ensure that the number of measurement points in the sweep ≧[2 × span / RBW].

g) Sweep time = auto couple.

h) Employ trace averaging (rms) mode over a minimum of 100 traces.

i) Use the peak marker function to determine the maximum amplitude level.

j) If the measured value exceeds requirement, then reduce RBW (but no less than 3 kHz) and repeat (note that this may require zooming in on the emission of interest and reducing the span to meet the minimum measurement point requirement as the RBW is reduced).

11.10.5 Method AVGPSD-2

Method AVGPSD-2 uses trace averaging across ON and OFF times of the EUT transmissions, followed by duty cycle correction.

The following procedure is applicable when the EUT cannot be configured to transmit continuously (i.e., D < 98%), when sweep triggering/signal gating cannot be used to measure only when the EUT is transmitting at its maximum power control level, and when the transmission duty cycle is constant (i.e., duty cycle variations are less than ±2%):

a) Measure the duty cycle (D) of the transmitter output signal as described in 11.6.

b) Set instrument center frequency to DTS channel center frequency.

c) Set span to at least 1.5 times the OBW.

d) Set RBW to: 3 kHz ≦RBW ≦100 kHz.

e) Set VBW ≧[3 × RBW].

f) Detector = power averaging (rms) or sample detector (when rms not available).

g) Ensure that the number of measurement points in the sweep ≧[2 × span / RBW].

h) Sweep time = auto couple.

i) Do not use sweep triggering; allow sweep to “free run.”

j) Employ trace averaging (rms) mode over a minimum of 100 traces.

k) Use the peak marker function to determine the maximum amplitude level.

l) Add [10 log (1 / D)], where D is the duty cycle measured in step a), to the measured PSD to compute the average PSD during the actual transmission time.

m) If measured value exceeds requirement specified by regulatory agency, then reduce RBW (but no less than 3 kHz) and repeat (note that this may require zooming in on the emission of

interest and reducing the span to meet the minimum measurement point requirement as the RBW is reduced).

Method AVGPSD-3

Method AVGPSD-3 uses rms detection across ON and OFF times of the EUT with max hold.

The following procedure is applicable when the EUT cannot be configured to transmit continuously (i.e., D < 98%), when sweep triggering/signal gating cannot be used to measure only when the EUT is transmitting at its maximum power control level, and when the transmission duty cycle is not constant (i.e., duty cycle variations exceed ±2%):

a) Set the instrument span to a minimum of 1.5 times the OBW.

b) Set sweep trigger to "free run."

c) Set RBW to: 3 kHz ≦RBW ≦100 kHz.

d) Set VBW ≧[3 × RBW].

e) Number of points in sweep ≧[2 × span / RBW]. (This ensures that bin-to-bin spacing is ≦ RBW / 2, so that narrowband signals are not lost between frequency bins.)

f) Sweep time ≦(number of points in sweep) × T, where T is defined in 11.6.

g) Detector = RMS (power averaging).

h) Trace mode = max hold.

i) Allow max hold to run for at least 60 s or longer as needed to allow the trace to stabilize.

j) Use the peak marker function to determine the maximum PSD level.

k) If the measured value exceeds requirement, then reduce RBW (but no less than 3 kHz) and repeat (note that this may require zooming in on the emission of interest and reducing the span to meet the minimum measurement point requirement as the RBW is reduced).

Limit:

FCC §15.247 (e)

RSS-247 (5.2) (b)
For digitally modulated systems, the power spectral density conducted from the intentional radiator to the antenna shall not be greater than 8 dBm in any 3 kHz band during any time interval of continuous transmission.

3.7 Conducted Band Edge & Conducted Spurious Emissions

Test Method:
The test method refers to subclause 8.5/8.7 of KDB 558074 v05r02 and subclause 11.11/11.13 of ANSI C63.10-2013.

Establish a reference level by using the following procedure:

a) Set instrument center frequency to DTS channel center frequency.

b) Set the span to ≧ 1.5 times the DTS bandwidth.

c) Set the RBW = 100 kHz.

d) Set the VBW ≧ [3 × RBW].

e) Detector = peak.

f) Sweep time = auto couple.

g) Trace mode = max hold.

h) Allow trace to fully stabilize.

i) Use the peak marker function to determine the maximum PSD level.

Establish an emission level by using the following procedure:

a) Set the center frequency and span to encompass frequency range to be measured.

b) Set the RBW = 100 kHz.

c) Set the VBW ≧ [3 × RBW].

d) Detector = peak.

e) Sweep time = auto couple.

f) Trace mode = max hold.

g) Allow trace to fully stabilize.

h) Use the peak marker function to determine the maximum amplitude level.

Ensure that the amplitude of all unwanted emissions outside of the authorized frequency band (excluding restricted frequency bands) is attenuated by at least the minimum requirements specified in 11.11. Report the three highest emissions relative to the limit.

Limit:

FCC §15.247 (d)

RSS-247 5.5
In any 100 kHz bandwidth outside the frequency band in which the spread spectrum or digitally modulated device is operating, the RF power that is produced shall be at least 20 dB below that in the 100 kHz bandwidth within the band that contains the highest level of the desired power, based on either an RF conducted or a radiated measurement, provided that the transmitter demonstrates compliance with the peak conducted power limits. If the transmitter complies with the conducted power limits based on the use of root-mean-square averaging over a time interval, as permitted under section 5.4(d), the attenuation required shall be 30 dB instead of 20 dB.

3.8 Spurious emissions & Restricted Band

Test Method:
The test method was refered to the subclause 11.12 of ANSI C63.10-2013.
Radiated emission measurements setup:

1: The EUT was place on a turn table which is 1.5m above ground plane for above 1GHz and 0.8m above ground for below 1GHz at 3 meter chamber room for test. The table was rotated 360 degrees to determine the position of the highest radiation.
2: The EUT was set 3 meters away from the interference – receiving antenna, which was mounted on the top of a variable – height antenna tower.
3: The height of antenna is varied from one meter to four meters above the ground to determine the maximum value of the field strength. Both horizontal and vertical polarizations of the antenna are set to make the measurement.
4: For each suspected emission, the EUT was arranged to its worst case and then the antenna was tuned to heights from 1 meter to 4 meters and the rotatable table was turned from 0 degrees to 360 degrees to find the maximum reading.

Antenna-port conducted measurements:
Antenna-port conducted measurements may also be used as an alternative to radiated measurements for determining compliance in the restricted frequency bands requirements. If conducted measurements are performed, then proper impedance matching must be ensured and an additional radiated test for cabinet/case emissions is required.

Use the following spectrum analyzer settings According to C63.10:
For Above 1GHz
Span = wide enough to capture the peak level of the in-band emission and all spurious
RBW = 1MHz, VBW≥RBW for peak measurement, Sweep = auto, Detector function = peak, Trace = max hold.
For Below 1GHz
Use the following spectrum analyzer settings:
Span = wide enough to capture the peak level of the in-band emission and all spurious
RBW = 100 KHz, VBW≥RBW for peak measurement, Sweep = auto, Detector function = peak, Trace = max hold.
For Below 30MHz
Use the following spectrum analyzer settings:
Span = wide enough to capture the peak level of the in-band emission and all spurious
RBW = 200 Hz, VBW≥RBW from 9KHz to 0.15MHz, RBW 9KHz VBW≥RBW from 0.15MHz to 30MHz for peak measurement, Sweep = auto, Detector function = peak, Trace = max hold.

Note:
1: The resolution bandwidth and video bandwidth of test receiver/spectrum analyzer is 120 KHz for Quasi-peak detection (QP) at frequency below 1GHz.
2: The resolution bandwidth of test receiver/spectrum analyzer is 1MHz and the video band-width is 3MHz for peak detection (PK) at frequency above 1GHz.
3: If the EUT can be configured or modified to transmit continuously (D ⩾ 98%), The resolu-tion bandwidth of test receiver/spectrum analyzer is 1MHz and the video bandwidth is 3MHz for RMS Average detection (AV) at frequency above 1GHz.
4: If continuous transmission of the EUT (D ⩾ 98%) cannot be achieved and the duty cycle is constant (duty cycle variations are less than ±2%), The resolution bandwidth of test receiv-er/spectrum analyzer is 1MHz and the video bandwidth is 3MHz for RMS Average detection (AV) at frequency above 1GHz, then the measurement results was added to a correction fac-tor (10log(1/duty cycle)).
5: If continuous transmission of the EUT (D ⩾ 98%) cannot be achieved and the duty cycle is not constant(duty cycle variations exceed ±2%), The resolution bandwidth of test receiv-er/spectrum analyzer is 1MHz and the video bandwidth is VBW ⩾ 1 / T, the T is transmission duration (T).

Limit:

FCC §15.209

RSS-GEN, Section 8.9

Frequency Range (MHz)	Field Strength Limit (uV/m) at 3 m	Field Strength Limit (dBuV/m) at 3 m
0.009-0.490	2400/F(kHz) @ 300 m	-
0.490-1.705	24000/F(kHz) @ 30 m	-
1.705 - 30	30 @ 30m	-
30 - 88	100	40
88 - 216	150	43.5
216 - 960	200	46
Above 960	500	54

§15.205 Restricted bands of operation

MHz	MHz	MHz	GHz
0.090-0.110	16.42-16.423	399.9-410	4.5-5.15
0.495-0.505	16.69475-16.69525	608-614	5.35-5.46
2.1735-2.1905	16.80425-16.80475	960-1240	7.25-7.75
4.125-4.128	25.5-25.67	1300-1427	8.025-8.5
4.17725-4.17775	37.5-38.25	1435-1626.5	9.0-9.2
4.20725-4.20775	73-74.6	1645.5-1646.5	9.3-9.5
6.215-6.218	74.8-75.2	1660-1710	10.6-12.7
6.26775-6.26825	108-121.94	1718.8-1722.2	13.25-13.4
6.31175-6.31225	123-138	2200-2300	14.47-14.5
8.291-8.294	149.9-150.05	2310-2390	15.35-16.2
8.362-8.366	156.52475-156.52525	2483.5-2500	17.7-21.4
8.37625-8.38675	156.7-156.9	2690-2900	22.01-23.12
8.41425-8.41475	162.0125-167.17	3260-3267	23.6-24.0
12.29-12.293	167.72-173.2	3332-3339	31.2-31.8
12.51975-12.52025	240-285	3345.8-3358	36.43-36.5
12.57675-12.57725	322-335.4	3600-4400	
13.36-13.41			

RSS-GEN 8.10

MHz	MHz	MHz	GHz
0.090 - 0.110	16.42 - 16.423	1660 - 1710	9.0 - 9.2
0.495 - 0.505	16.69475 - 16.69525	1718.8 - 1722.2	9.3 - 9.5
2.1735 - 2.1905	25.5 - 25.67	2200 - 2300	10.6 - 12.7
3.020 - 3.026	37.5 - 38.25	2310 - 2390	13.25 - 13.4
4.125 - 4.128	73 - 74.6	2483.5 - 2500	14.47 - 14.5
4.17725 - 4.17775	74.8 - 75.2	2655 - 2900	15.35 - 16.2
4.20725 - 4.20775	108 – 138	3260 – 3267	17.7 - 21.4
5.677 - 5.683	149.9 - 150.05	3332 - 3339	22.01 - 23.12
6.215 - 6.218	156.52475 - 156.52525	3345.8 - 3358	23.6 - 24.0
6.26775 - 6.26825	156.7 - 156.9	3500 - 4400	31.2 - 31.8
6.31175 - 6.31225	162.0125 - 167.17	4500 - 5150	36.43 - 36.5
8.291 - 8.294	167.72 - 173.2	5350 - 5460	Above 38.6
8.362 - 8.366	240 – 285	7250 - 7750	
8.37625 - 8.38675	322 - 335.4	8025 – 8500	
8.41425 - 8.41475	399.9 - 410		
12.29 - 12.293	608 - 614		
12.51975 - 12.52025	960 - 1427		
12.57675 - 12.57725	1435 - 1626.5		
13.36 - 13.41	1645.5 - 1646.5		

4 Test Setup Photos

Ref “EFGX24030164-IE-05-E01_Setup_Photos.pdf”

5 External Photos

Ref “EFGX24030164-IE-05-E01_External_Photos.pdf”

6 Internal Photos

Ref “EFGX24030164-IE-05-E01_Internal_Photos.pdf”

7 Appendix

Ref “EFGX24030164-IE-05-E01_appendix.pdf”

-End of report-