Shenzhen Huaxin Technology Co., Ltd

SPECIFICATION FOR APPROVAL

Customer: Xinchuang Jin

Project Name:Projector

Description: WIFI ANT

Part Number : HX-PB4709A-11-130-A

Date 2024Year 10 Month 08 Day

Signature

Responsible	Approve	Confirm
Huang Zhixiong	Cheng Haiyao Contact: 13410001990	

UNLESS OTHER SPECIFIED TOLERANCES ON: X=±1 X.X=±0.1 X.XX=±0.01 ANGLES=± HOLE DIA=±		Shenzhen Huaxin Technology Co., Ltd
SCALE:	UNIT: mm	THIS DRAWINGS AND SPECIFICATIONS ARE THE PROPERTY OF HUAXIN TECHNOLOGY CO.,LTD. AND SHALL NOT BE REPRODUCED OR USED AS THE BASIS FOR THE MANUFACTURE OR SALE OF APPARATUS OR DEVICES WITHOUT PERMISSION.
DRAWN BY:	CHECKED BY:	
DESIGNED BY:	APPROVED BY: Cheng Haiyao	
TITLE: HX-PB4709A-11-130-A Specification	DOCUMENT NO.	PAGE REV. P0

1. Electrical Specification :

Those specifications were specially defined for Xinchuang Jin *WIFI model, and all characteristics were measured under the model's handset testing jig .*

1-1. Frequency Band:

Frequency Band	MHz
Wi-Fi	2400-2500、5700-5800

1-2. Impedance

50 ohm nominal

1-3.Antenna Matching Network

Location	capacitor	Inductor
Shunt 01	N/A	N/A
Series	N/A	N/A
Shunt 02	N/A	N/A

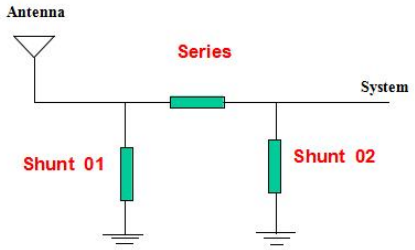

2. VSWR

2-1 Measuring Method

1. A 50Ω coaxial cable is connected to the antenna. Then this cable is connected to a network analyzer to measure the VSWR,
2. Keeping this jig away from metal at least 20cm.

2-2 Measurement frequency points and VSWR value

Frequency (MHz)	2400	2450	2500	5700	5800
VSWR	1.24	1.15	1.11	2.35	2.69

THIS DRAWINGS AND SPECIFICATIONS ARE THE PROPERTY OF HUAXIN TECHNOLOGY CO.,LTD. AND SHALL NOT BE REPRODUCED OR USED AS THE BASIS FOR THE MANUFACTURE OR SALE OF APPARATUS OR DEVICES WITHOUT PERMISSION.

3. Efficiency and Gain

- Measurement instruments: microwave anechoic chamber, Agilent network analyzer, Agilent spectrum analyzer, 8960 comprehensive tester, standard antenna.
- Microwave darkroom instructions:

  This is the microwave anechoic chamber set up by our company in Shenzhen. This microwave anechoic chamber is a far-field measurement system, with a size of 5.0 meters x 3.0 meters x 3.0 meters and a quiet zone size of 15 centimeters x 15 centimeters x 15 centimeters.

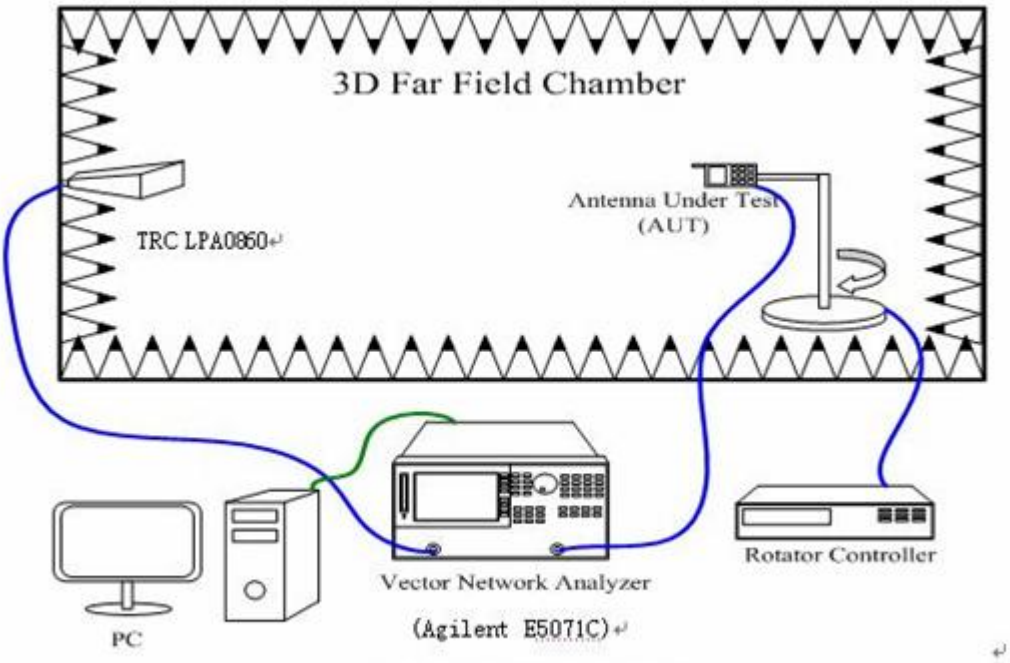

图. 1. 微波暗室内部仪器设置 r.

Figure 1 is the connection diagram of the instrument setup and network analyzer in the microwave anechoic chamber. The distance between the transmitting antenna (0.8-6.0 GHz for Gain Calibration) and the antenna under test (AUT) is 3.0 meters. The antenna under test is placed on a rotating platform and can be roughly and accurately measured by controlling the rotation angle of the turntable.

Place the antenna under test on a rotating table and measure the 360 degree field strength data of its various planes (ZY plane and ZX plane). Then replace the tested antenna with a standard dipole antenna and measure its 360 degree field strength data as the conversion gain standard value. The gain value and directional pattern of the tested antenna can be obtained through the conversion in Equation 1.

3-1 Measuring Method

1. Using a low loss coaxial cable to link a standard handset jig,
2. Fixed this handset jig on chamber's rotator plane,
3. Linking jig into network analyzer port and using a probing horn antenna to collect data,
4. Using another standard gain horn antenna to calibrated those data.

3-2 Efficiency and Gain Value

Frequency (MHz)	Efficiency (%)	Average GAIN (dB)	Peak GAIN (dBi)
2400	62.1	-3.46	3.1
2450	61.8	-3.27	3.3
2490	59.3	-3.19	3.4
5700	55.7	-3.03	3.3
5800	55.2	-3.01	3.3

3-3 3D Pattern

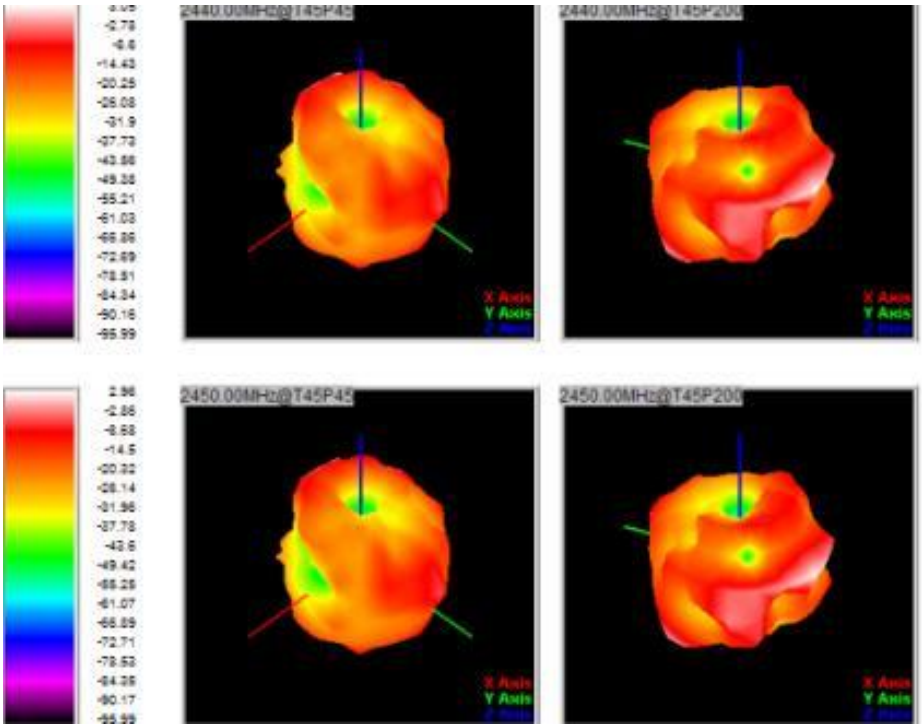

4. Mechanical Specification:

Mechanical Configuration (Unit: mm)

The appearance of the antenna is according to drawing Figure 4-1

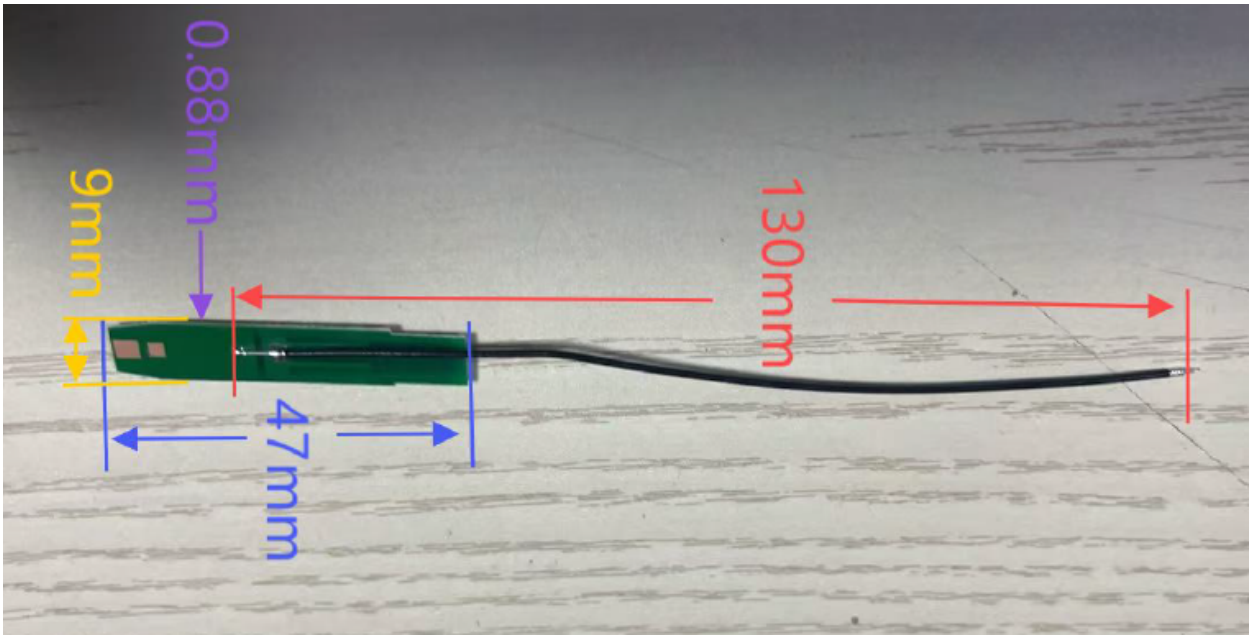

UNLESS OTHER SPECIFIED TOLERANCES ON： X＝±1 X.X＝±0.1 X.XX＝±0.01 ANGLES＝± HOLE DIA＝±		Shenzhen Huaxin Technology Co., Ltd
SCALE：	UNIT：mm	THIS DRAWINGS AND SPECIFICATIONS ARE THE PROPERTY OF HUAXIN TECHNOLOGY CO.,LTD. AND SHALL NOT BE REPRODUCED OR USED AS THE BASIS FOR THE MANUFACTURE OR SALE OF APPARATUS OR DEVICES WITHOUT PERMISSION.
DRAWN BY：	CHECKED BY：	
DESIGNED BY：		
TITLE：HX-PB4709A-11-130-A Specification	DOCUMENT NO.	PAGE REV. P0