Event Data Recorder

User manual

A-A6M-STWGA-6

Important product and safety instructions

By using this recorder, you confirm that you have read and agree to our Terms of Use.

This symbol indicates safety and health information in this guide. Please read this guide to learn important safety and health information about the recorder you purchase.

WARNING: Failure to properly set up, use, and maintain this recorder may increase the risk of serious injury, death, property damage, or damage to recorder-related accessories. Please pay attention to surrounding conditions at all times to avoid harm to yourself or others.

1. Please keep these instructions in a safe place.
2. Please heed all warnings.
3. Please follow all instructions.
4. Please protect the power supply from being stepped on or squeezed. Pay special attention to plugs, sockets and power cords connected to the device.
5. Please refer all maintenance work to qualified personnel. Regardless of whether the device has been damaged in any way, such as a broken plug, liquid has been spilled, or objects have fallen into the device, it may become inoperable.
Repair is required for normal operation or if it is damaged by a drop.
6. Do not drop, disassemble, open, squeeze, bend, change shape, pierce, cut, dry in microwave and hair dryer or burn.
7. Do not insert guide objects into any openings of the recorder, such as USB ports.
8. Use the factory standard original charger.
9. Please find professionals to modify the power lines.

Note: The limit working environment of this recorder is: -20~70℃. Too low or too high temperature will cause the recorder to malfunction. Please turn on the air conditioner in time after getting in the car and wait until the temperature in the car is normal before plugging it in. Turn on the power and start working.

Dash Cam Specifications：

name	Dash Cam
Features	HD 3-way, mobile phone connection, track playback
G-sensor	Built-in (emergency save in case of car accident, will not be deleted)
LCD screen size	2.4 inch IPS display
lens	170-degree A+ grade high-resolution ultra-wide-angle lens
language	English, Chinese (simplified), Chinese (traditional), Thai, etc.
file format	TS
Video resolution	2K+1K+1K
Recording Video Format	H.265, Audio: AAC
ADAS	Optional (not supported when recording 3)
Non-stop loop record	Seamless loop recording without missing a second
On-board switch	Support car ignition, turn off and turn off
parking monitoring	Support needs to be equipped with a step-down line

time watermark	support
carrier media	2G DDR
camera mode	video capture
photo format	JPEG
storage card	TF (up to 128GB)
microphone	support
built-in audio	support
GPS track	Optional GPS or electronic dog, supports GPS by default
WiFi	optional default support
current frequency	50HZ/60HZ
USB function	powered by
power interface	TYPE-C DC5V 2.5A
Battery	3F capacitor

Description of recorder structure:

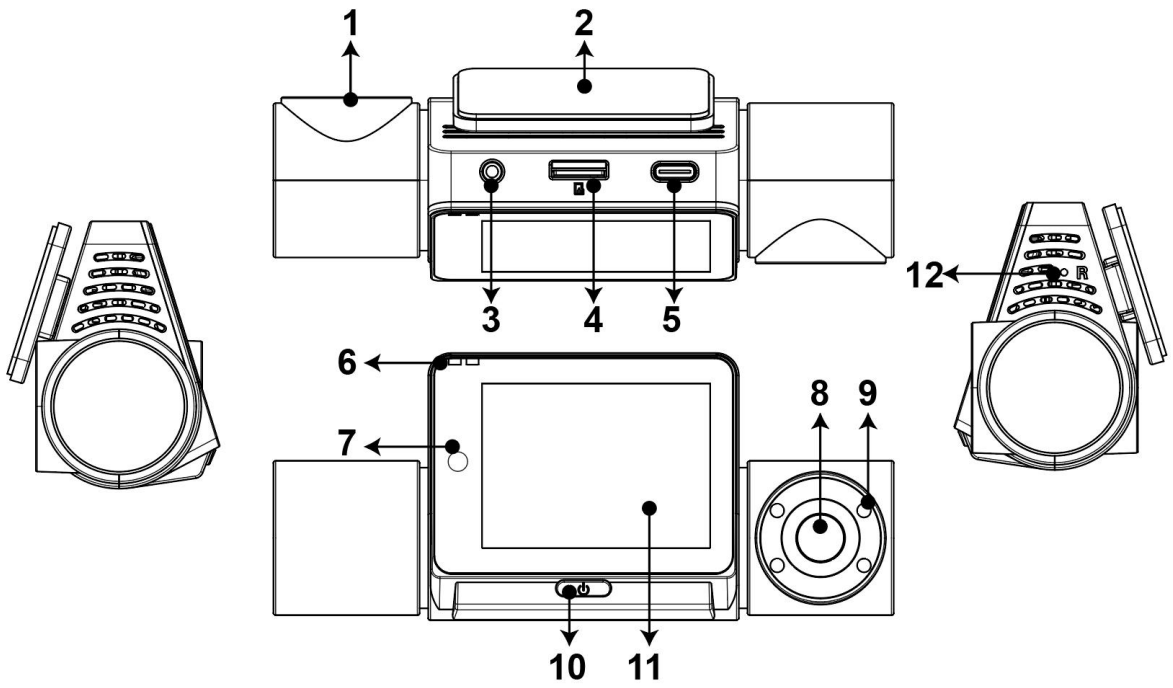

1. Front camera 2.3M plastic bracket 3. Rear camera input interface 4.TF card slot 5.YPE-C power
6. Indicator light 7.Home button 8.Inner camera 9. Night vision light
10. Off/on button 11. Display 12. Reset button

Nstallation method:

1. Connect the recorder bracket and the host computer with screws.
2. Wipe the front windshield clean with a cloth.
3.Tear off the protective sticker on the bracket.
4. Place the bracket with the protective sticker removed on the car windshield.
5.Tear off the protective film on the recorder display screen.

6. Connect the car charger to the car cigarette lighter.
7. Connect the USB end of the car charger to the USB end of the recorder.
8.Tear off the protective film on the lens

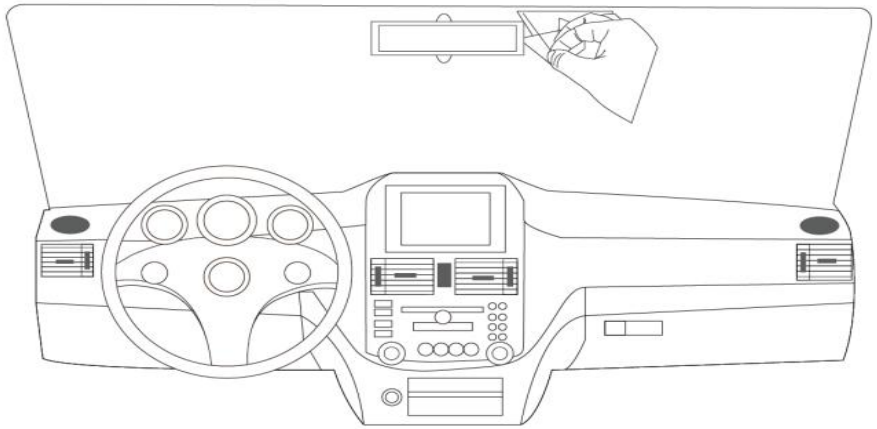

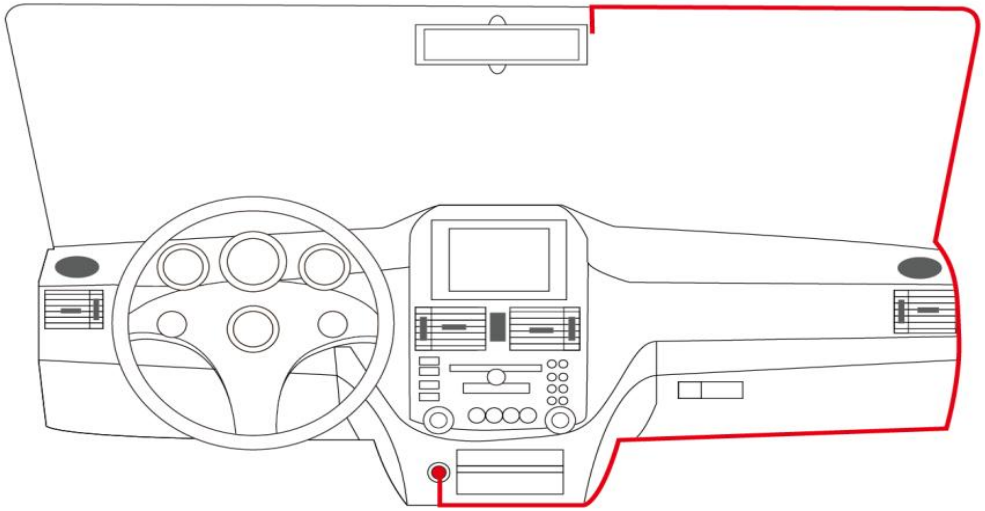

Notice:
The bracket position is adjustable (45 degrees) for the front lens recording angle (recommendation: the front part of the lower picture occupies 1/3 of the screen, and the sky point of the upper picture occupies 1/3 of the screen).

⚠ **Warning: Users should not observe the recorder display screen at all times while driving to avoid affecting personal and passenger safety.**

Special features:

1. USB mode
Connect the USB cable to the computer, the driving recorder will automatically pop up the USB menu, and the following options will appear:
Removable disk
In this mode, video files or photo files can be accessed.
PC CAM
Selecting this mode will pop up the USB video device, which can be used for real-time network photography or video chat, and used as a PC camera.
2. Parking monitoring function

This function needs to be used with a 3-core step-down cable. When the parking monitoring is turned on, when the vehicle is turned off, the recorder enters the 1-second recording mode. The machine can be set to record according to the length of time it needs to be parked. After the time-lapse recording is completed at the set time, if the parking monitoring function is turned on, the car will be locked to record a video while vibrating, and then shut down to wait for the next startup.

3. WIFI function

This function is to create a WIFI hotspot inside the recorder and transfer the files inside the recorder to the mobile phone through WIFI, thereby realizing wireless interconnection between the recorder and the mobile phone. The WIFI signal cannot be connected to the Internet. To use this function, you need to search for "viidure" in the mobile app market or browser, download the latest version of the APP that is compatible with the mobile phone system, and install it on your phone.

4. GPS function

If the machine is connected to a GPS module, download the map on the 6 Detective APP and play it or use the computer to install the player in the TF card to play back the video. The playback interface can view the speed of the car, the position and direction of the car as well as the car's driving route.

5. ADAS function

This function includes Track Departure (LDWS), Leading Vehicle Warning (FCWS), and Leading Vehicle Start (FCMD). When opening, you need to adjust the shooting position so that the right and left lines on the screen are aligned with the lane lines being shot, and the top horizontal line on the screen is at the end of the lane being shot.

FCC Caution.

This device complies with part 15 of the FCC Rules. Operation is subject to the following two conditions:
(1) This device may not cause harmful interference, and
(2) this device must accept any interference received, including interference that may cause undesired operation.

Any Changes or modifications not expressly approved by the party responsible for compliance could void the user's authority to operate the equipment.

Note: This equipment has been tested and found to comply with the limits for a Class B digital device, pursuant to part 15 of the FCC Rules. These limits are designed to provide reasonable protection against harmful interference in a residential installation. This equipment generates uses and can radiate radio frequency energy and, if not installed and used in accordance with the instructions, may cause harmful interference to radio communications. However, there is no guarantee that interference will not occur in a particular installation. If this equipment does cause harmful interference to radio or television reception, which can be determined by turning the equipment off and on, the user is encouraged to try to correct the interference by one or more of the following measures:
-Reorient or relocate the receiving antenna.
-Increase the separation between the equipment and receiver.
-Connect the equipment into an outlet on a circuit different from that to which the receiver is connected.
-Consult the dealer or an experienced radio/TV technician for help.

This equipment complies with FCC radiation exposure limits set forth for an uncontrolled environment. This equipment should be installed and operated with minimum distance 20cm between the radiator & your body.