Functional panel diagram

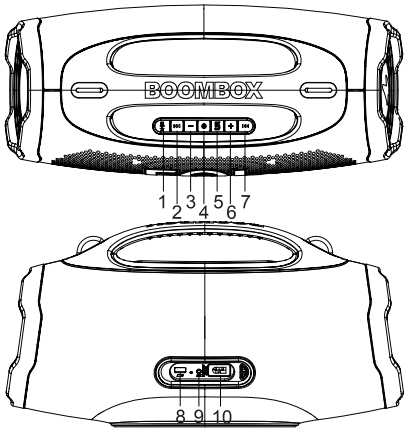

Button function description.

1. M/AX : Press this button to enter BT mode directly, then press to enter USB-FM-AUX mode, then press to return to BT mode. In any mode, inserting a USB flash drive will take priority. While playing music, hold this button to change the light display mode, there are a total of 7 light modes to choose from.
2. ⏮ : Press briefly to play the previous song, in FM mode, press briefly to play the previous channel.
3. "-" : Hold this button to reduce volume.
4. ⏻ : Hold this button to turn on, and hold it to turn off. Due to music playback, press this button briefly to pause, and press briefly again to resume.
5. BT : Press briefly to enter BT mode. In BT mode, press briefly this button to search for another speaker and pair it in TWS. Hold this button to disconnect the BT connection.
6. "+" : Hold this button to increase volume.
7. ⏭ : Press briefly to play the next song, in FM mode, press briefly to play the next channel.
8. USB input.
9. LINE IN auxiliary port.
10. AC charging cable input 120-220V 50/60Hz

Specifications

Speaker Size: 6.5 "+3 "x2+1 "x2
Frequency Response: 40Hz-20KHz
S/N Ratio:≥80dB
Output Power: 100W+30Wx2+30Wx2

Power: IN 120-220V 50/60Hz
Battery Capacity:7.4V 12000mAh
It can play for 14 hours.

Accessories

Power cable	1 pc
Instruction manual	1 pc
Shoulder strap	1 pc

FOL PRO

Portable Wireless Speaker System

Model: FS-R208

Operation Manual

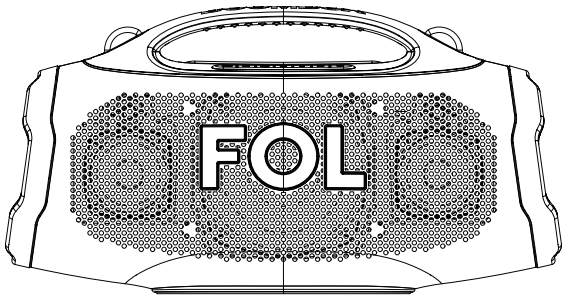

FCC Warnning:

This equipment has been tested and found to comply with the limits for a Class B digital device, pursuant to part 15 of the FCC Rules. These limits are designed to provide reasonable protection against harmful interference in a residential installation. This equipment generates, uses and can radiate radio frequency energy and, if not installed and used in accordance with the instructions, may cause harmful interference to radio communications. However, there is no guarantee that interference will not occur in a particular installation. If this equipment does cause harmful interference to radio or television reception, which can be determined by turning the equipment off and on, the user is encouraged to try to correct the interference by one or more of the following measures:

- Reorient or relocate the receiving antenna.
- Increase the separation between the equipment and receiver.
- Connect the equipment into an outlet on a circuit different from that to which the receiver is connected.
- Consult the dealer or an experienced radio/TV technician for help.

Caution: Any changes or modifications to this device not explicitly approved by manufacturer could void your authority to operate this equipment.

This device complies with part 15 of the FCC Rules. Operation is subject to the following two conditions:

(1)This device may not cause harmful interference, and (2) this device must accept any interference received, including interference that may cause undesired operation.

This equipment complies with FCC radiation exposure limits set forth for an uncontrolled environment. This equipment should be installed and operated with minimum distance 0cm between the radiator and your body.