PRODUCT SPECIFICATION

PRODUCT NAME	PCBA
P/N	OPTIMUS-C-8000

1. Outlooking:

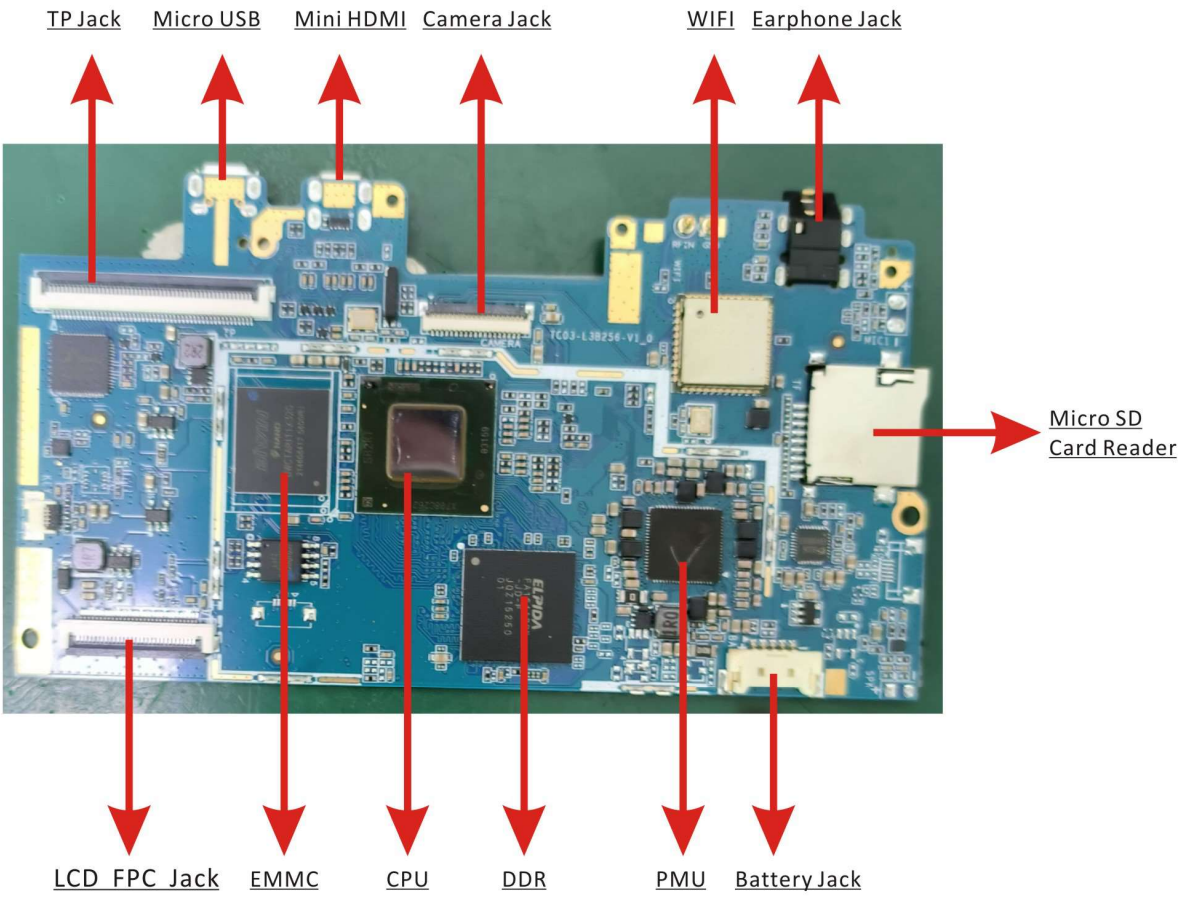

2. Spec

CPU: Cherry trail, Z8350(Quad-Core) 14nm
Total Cores: 4
Burst Frequency: 1.92 GHz
Processor Base Frequency: 1.44 GHz
Cache: 2 MB
Scenario Design Power (SDP): 2 W
DDR: 2GB LPDDR3
Flash: 32GB EMMC

3. Drawing

MICRO-SD CONNECTOR

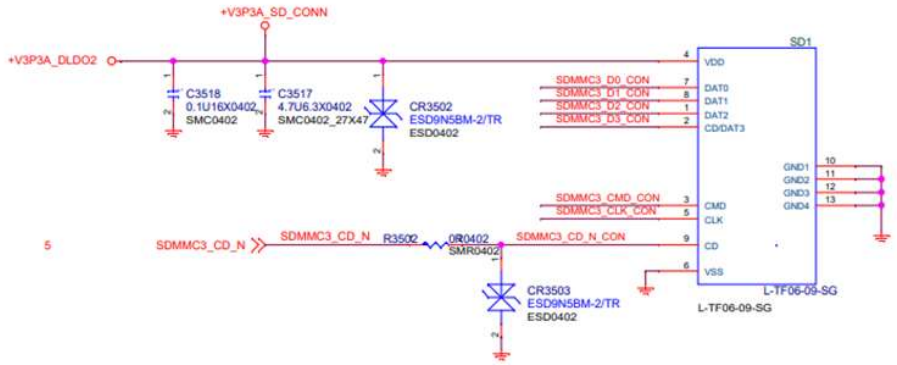

CAMERAS - FRONT & REAR

REAR CAM - MCSI-1 AND CAM1
FRONT CAM - MCSI-2 AND CAM2

Rear camera

I2C ADDRESS: 0X10

Front camera

FRONT CAMERA CONN
I2C ADDRESS: 0X36

Close to CAM Conn

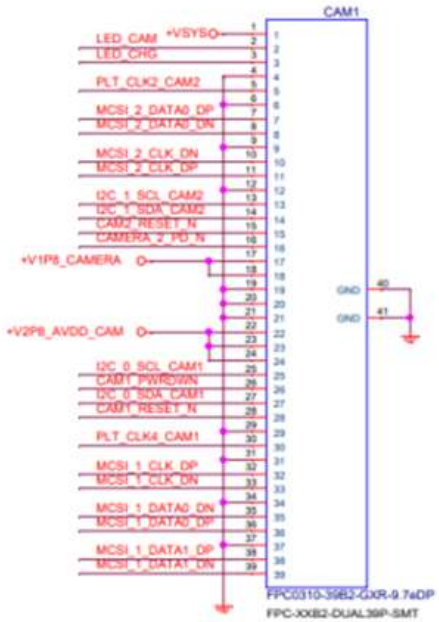

BUTTON FPC CONNECTOR

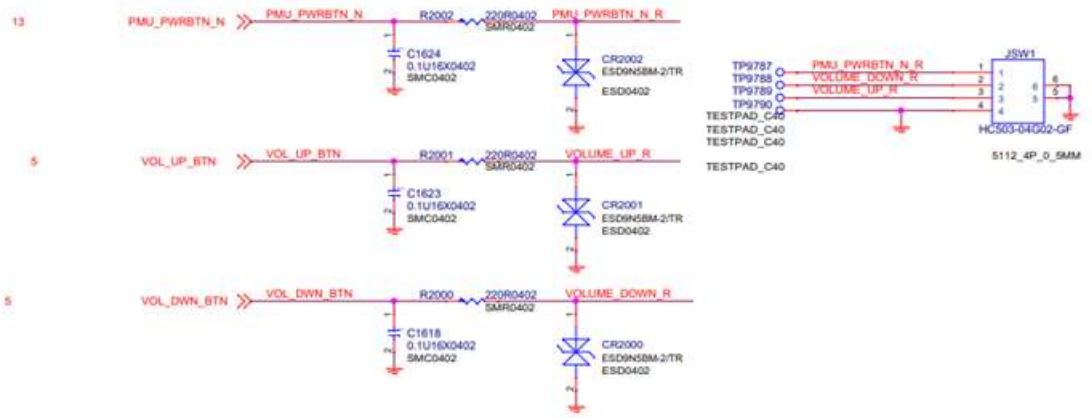

BATTERY CONNECTOR

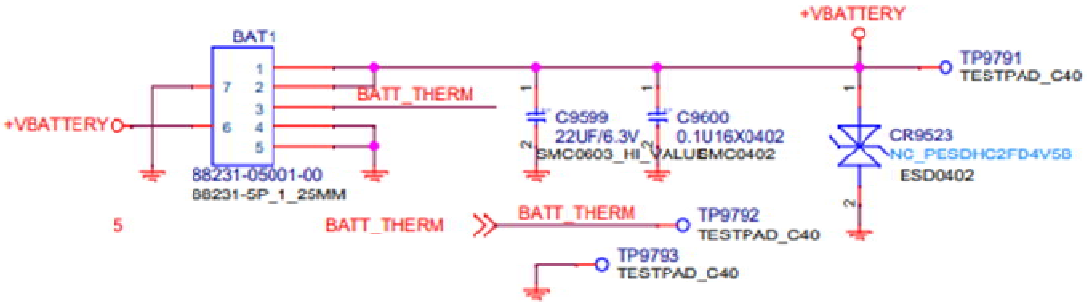

HEADSET JACK AND BUTTONS

Iphone Type
L+R+G+M

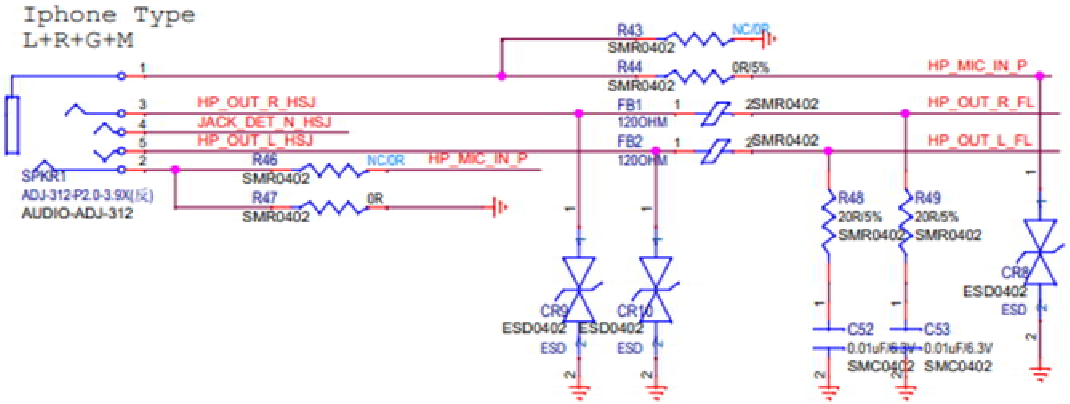

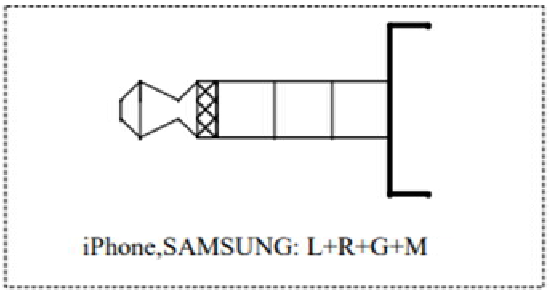

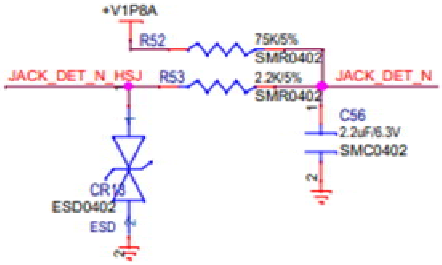

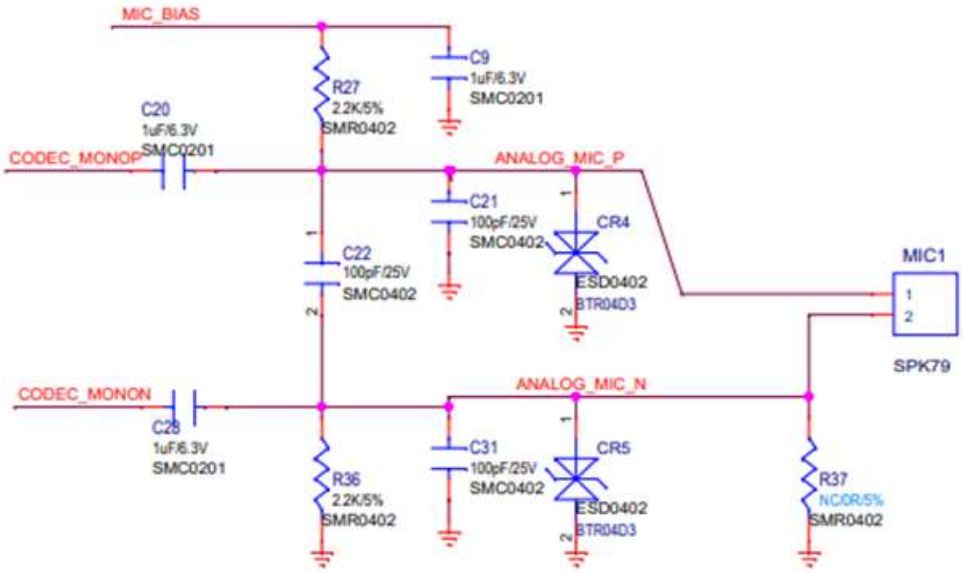
MIC_BIAS
C9
1uF/6.3V
SMC0201
R27
2.2K/5%
SMR0402
C20
1uF/6.3V
SMC0201
CODEC_MONOP
ANALOG_MIC_P
C21
100pF/25V
SMC0402
CR4
ESD0402
BTR04D3
C22
100pF/25V
SMC0402
MIC1
SPK79
CODEC_MONON
ANALOG_MIC_N
C28
1uF/6.3V
SMC0201
C31
100pF/25V
SMC0402
CR5
ESD0402
BTR04D3
R36
2.2K/5%
SMR0402
R37
NC0R/5%
SMR0402

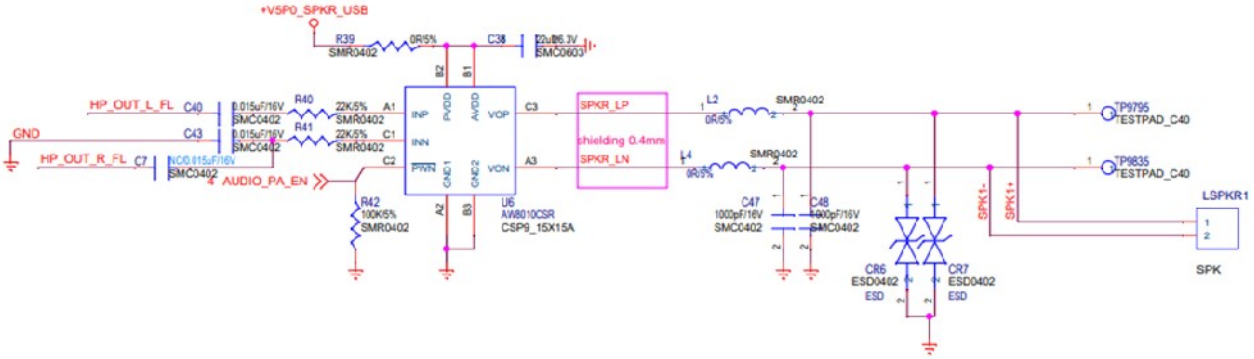
+V5P0_SPKR_USB
R39
SMR0402
0R/5%
C38
22u/6.3V
SMC0603
HP_OUT_L_FL
C40
0.015uF/16V
SMC0402
R40
22K/5%
SMR0402
GND
C43
0.015uF/16V
SMC0402
R41
22K/5%
SMR0402
HP_OUT_R_FL
C7
NC0.015uF/16V
SMC0402
AUDIO_PA_EN
R42
100K/5%
SMR0402
U6
AW8010CSR
CSP9_15X15A
SPKR_LP
shielding 0.4mm
SPKR_LN
L2
0R/5%
SMR0402
L4
0R/5%
SMR0402
C47
1000pF/16V
SMC0402
C48
1000pF/16V
SMC0402
CR6
ESD0402
CR7
ESD0402
TP9795
TESTPAD_C40
TP9835
TESTPAD_C40
LSPKR1
SPK

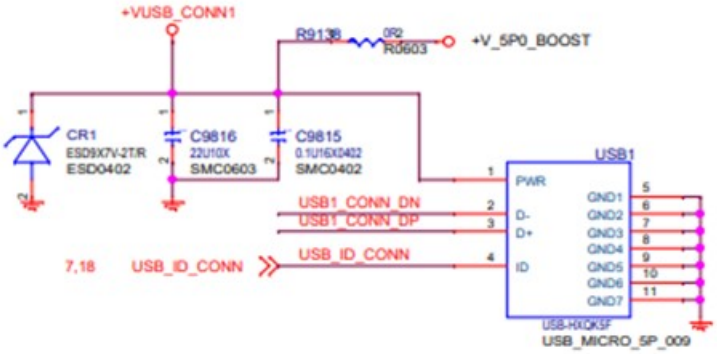
+VUSB_CONN1
R9138
0R2
R0603
+V_5P0_BOOST
CR1
ESD9X7V-2T/R
ESD0402
C9816
22U/10X
SMC0603
C9815
0.1U/16X0402
SMC0402
USB1
PWR
D-
D+
ID
GND1
GND2
GND3
GND4
GND5
GND6
GND7
USB1_CONN_DN
USB1_CONN_DP
USB_ID_CONN
7,18
USB_ID_CONN
USB-HXQK5F
USB_MICRO_5P_009

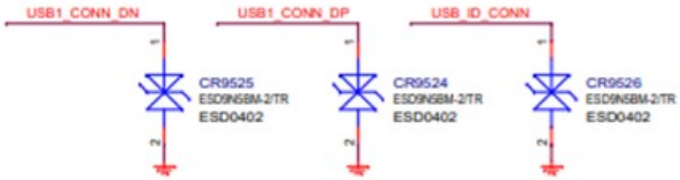
USB1_CONN_DN
USB1_CONN_DP
USB_ID_CONN
CR9525
ESD9N5BM-2/TR
ESD0402
CR9524
ESD9N5BM-2/TR
ESD0402
CR9526
ESD9N5BM-2/TR
ESD0402

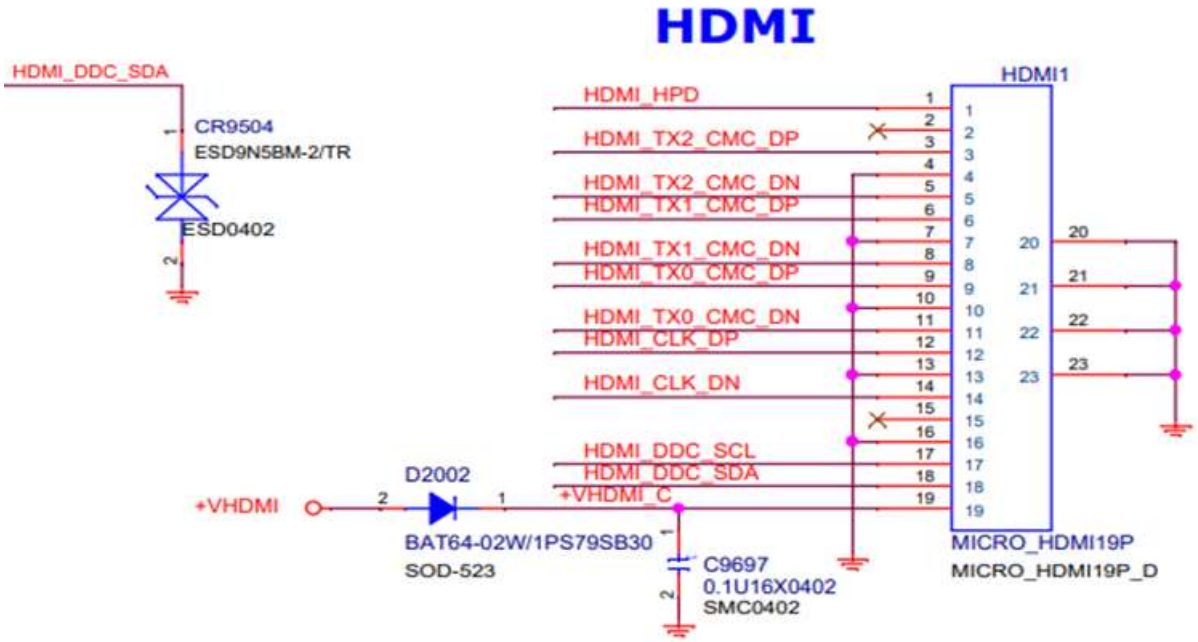

The central processing unit of processor Z8350 (quad core, 1.44GHz). Assembled into a tablet through external components such as batteries, display screens, and touch screens, you can access websites, news, or local business information to access the Windows App Store and download your favorite applications, games, movies, music, and more! With the built-in Bluetooth function, you can seamlessly pair your computer with Bluetooth compatible devices. Store all your important documents, images, and movies in 32GB of memory on your device. By using a Micro card reader slot, storage space can also be expanded to 160GB. PCBA complies with RoHS standards and the product is suitable for export.

FCC Statement

This device complies with part 15 of the FCC Rules. Operation is subject to the following two conditions: (1) This device may not cause harmful interference, and (2) this device must accept any interference received, including interference that may cause undesired operation.

Note: This equipment has been tested and found to comply with the limits for a Class B digital device, pursuant to part 15 of the FCC Rules. These limits are designed to provide reasonable protection against harmful interference in a residential installation. This equipment generates, uses and can radiate radio frequency energy and, if not installed and used in accordance with the instructions, may cause harmful interference to radio communications. However, there is no guarantee that interference will not occur in a particular installation. If this equipment does cause harmful interference to radio or television reception, which can be determined by turning the equipment off and on, the user is encouraged to try to correct the interference by one or more of the following measures:

—Reorient or relocate the receiving antenna.

—Increase the separation between the equipment and receiver.

—Connect the equipment into an outlet on a circuit different from that to which the receiver is connected.

—Consult the dealer or an experienced radio/TV technician for help.

Note: The Grantee is not responsible for any changes or modifications not expressly approved by the party responsible for compliance. such modifications could void the user's authority to operate the equipment.

The device has been evaluated to meet general RF exposure requirement.

To maintain compliance with FCC's RF exposure guidelines, the distance must be at least 20 cm between the radiator and your body, and fully supported by the operating and installation configurations of the transmitter and its antenna(s).