Part No. 1000146

Wi-Fi 6 & Wi-Fi 6E or CBRS/n78 Stamped Metal Embedded Antenna

2.4 / 5 GHz or 3.3 – 3.8 GHz

Supports: Wi-Fi applications, Agriculture, Bluetooth, Zigbee, WLAN, Smart Home, Healthcare, Digital Signage

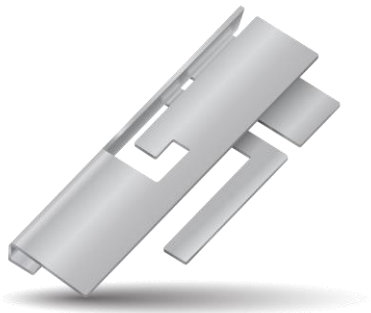

*CBRS/n78 layout offered in Appendix 1

Wi-Fi 6 & Wi-Fi 6E or CBRS/n78 Stamped Metal Embedded Antenna
2.400 GHz – 2.485 GHz;
3.300 - 3.800 GHz;
5.150 GHz – 5.825 GHz;
5.975 GHz – 7.125 GHz

KEY BENEFITS

Stay-in-Tune

KYOCERA AVX antenna technology provides superior RF field containment, resulting in less interaction with surrounding components.

Quicker Time-to-Market

By optimizing antenna size, performance and emissions, customer and regulatory specifications are more easily met.

Reliability

Products are the latest RoHS version compliant

APPLICATIONS

- Embedded design
- Cellular, Headsets, Tablets
- Gateway, Access Point
- Handheld
- Telematics
- Tracking
- Healthcare
- M2M, Industrial devices
- Smart Grid
- OBD-II

KYOCERA AVX Stamped Metal series of Isolated Magnetic Dipole™ (IMD) antennas deliver on the key needs of device designers for higher functionality and performance in smaller/thinner designs. These innovative antennas provide compelling advantages for full WIFI 6 and WiFi 6E handheld devices, media players and other mobile devices. 1000146 Automotive A-series version offered.

Greater Flexibility

KYOCERA AVX first-in-class IMD technology enables you to develop concept designs that are more advanced and that deliver superior performance in reception critical applications. The 1000146 can also achieve CBRS/n78 performance with proper tuning and layout shown on Appendix 1.

Electrical Specifications

Typical Characteristics, on 125 x 45 mm PCB

Frequency (GHz)	2.400 – 2.485	5150 – 5.825	5925 - 7125	3.300– 3.800
Peak Gain	1.7 dBi	4.1 dBi	3.8 dBi	Refer to Appendix 1
Average Efficiency	81%	68%	64%	
VSWR Match	2.0:1 max	2.0:1 max	2.2:1 max	
Feed Point Impedance	50 ohms unbalanced			
Polarization	Linear			
Power Handling	0.5 Watt CW			

Mechanical Specifications & Ordering Part Number

Ordering Part Number	1000146
Size (mm)	17.85 x 6.9 x 4.3
Mounting	SMT
Weight (grams)	0.35
Packaging	Tape & Reel, 1000146 – 1,200 pieces per reel
Demo Board	1005456 (WIFi/WiFi6E) 1000146-03 (n78/CBRS)

Wi-Fi 6 & Wi-Fi 6E KYOCERA AVX Stamped Metal Embedded Antenna.
KYOCERA AVX produces a wide variety of standard and custom antennas to meet user needs.

Antenna Dimensions

Typical antenna dimensions (mm)

Part Number	A	B	C
1000146	17.85 ± 0.3	6.9 ± 0.3	4.3 ± 0.4

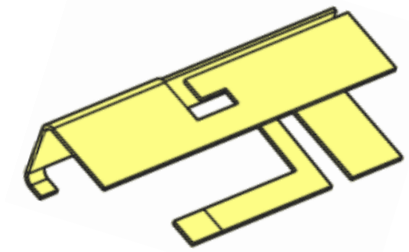

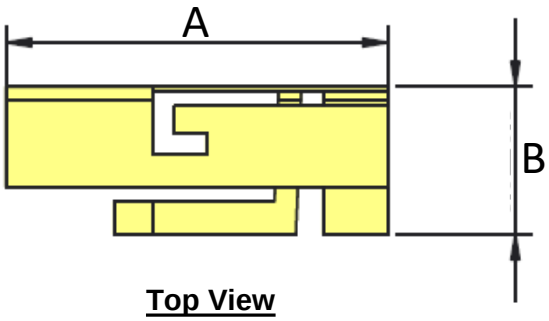

Top View

Height

Pin	Description
1	Feed
2	Ground
3	Dummy Pad

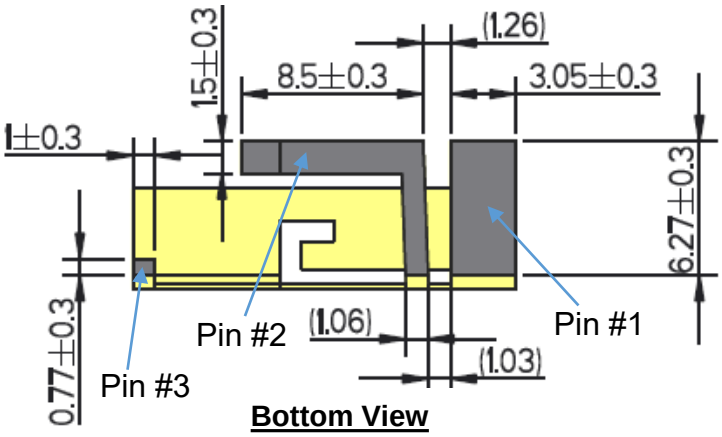

Bottom View

tel +(1) 858.550.3820
email: antenna.info@kyocera-avx.com
1 Avx Blvd, Fountain Inn, SC 29644

Wi-Fi 6 & Wi-Fi 6E KYOCERA AVX Stamped Metal Embedded Antenna.
KYOCERA AVX produces a wide variety of standard and custom antennas to meet user needs.

Test Setup (1005456)

Typical Performance on 125 x 45 mm PCB

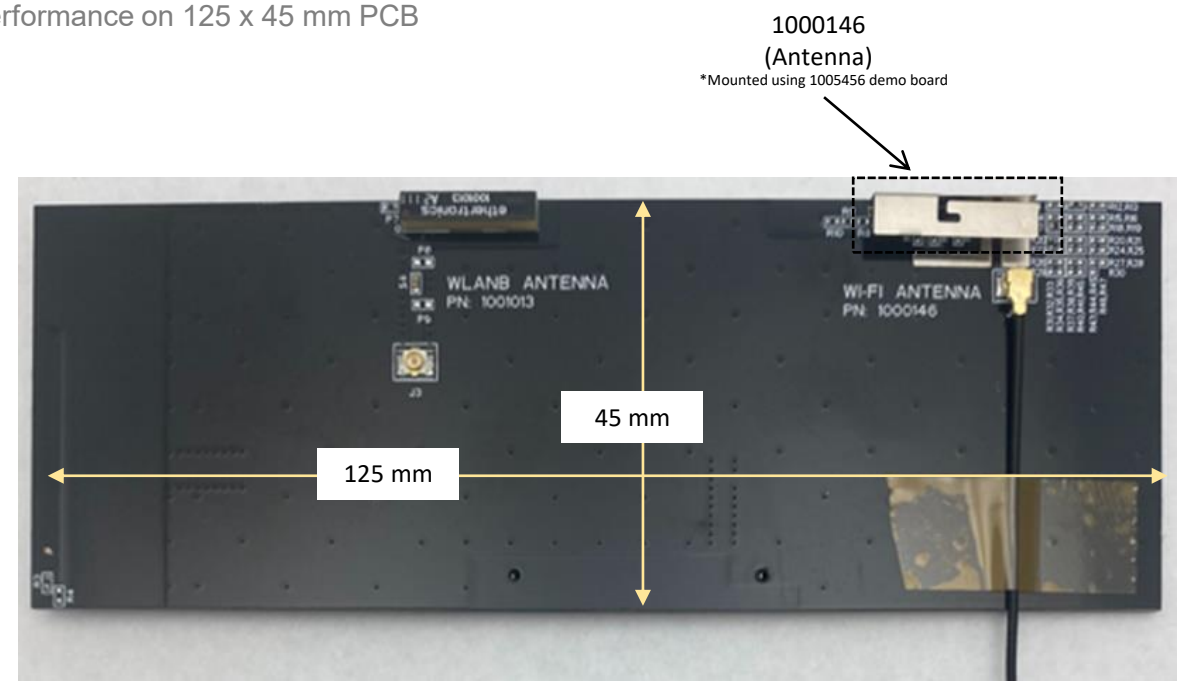

tel +(1) 858.550.3820
email: antenna.info@kyocera-avx.com
1 Avx Blvd, Fountain Inn, SC 29644

Wi-Fi 6 & Wi-Fi 6E KYOCERA AVX Stamped Metal Embedded Antenna.
KYOCERA AVX produces a wide variety of standard and custom antennas to meet user needs.

VSWR, Efficiency, and Peak Gain Plots

Typical Performance on 125 x 45 mm PCB

VSWR
(2.400 – 2.490) GHz

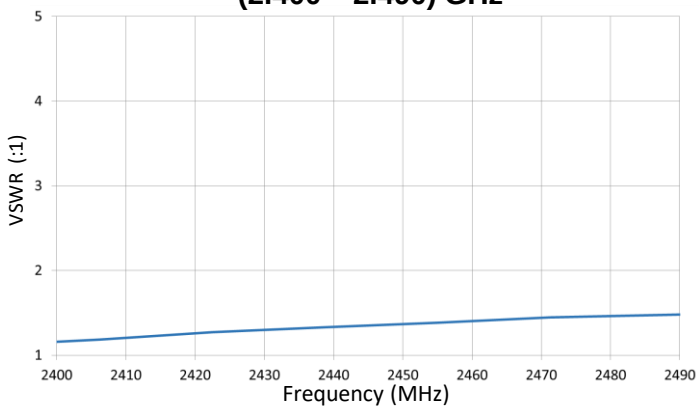

VSWR
(5.100 – 7.200) GHz

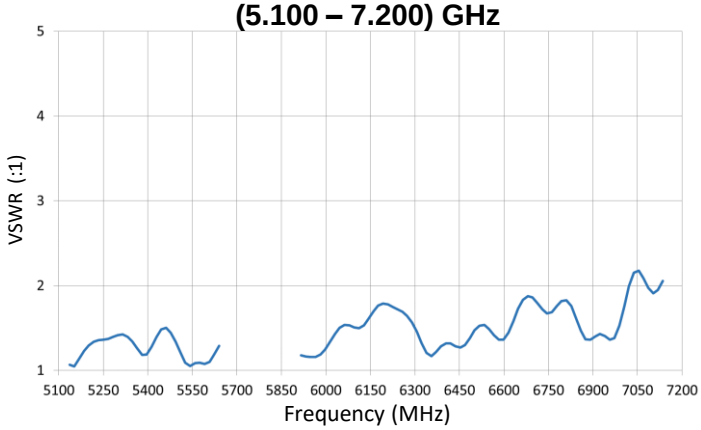

Efficiency
(2.400 – 2.490) GHz

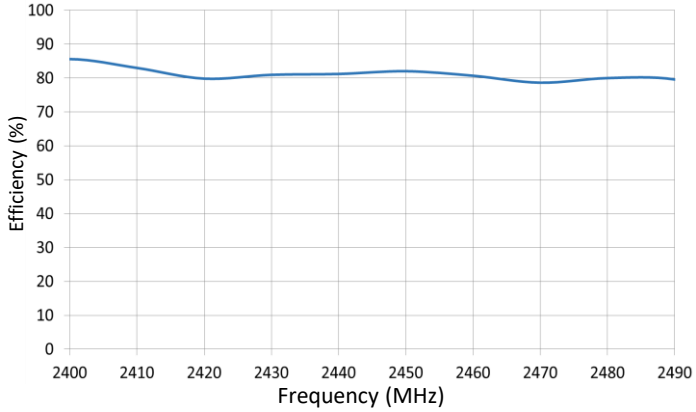

Efficiency
(5.100 – 7.200) GHz

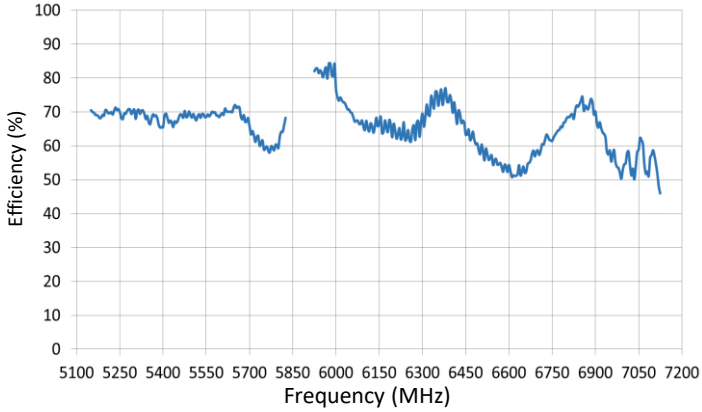

Peak Gain
(2.400 – 2.490) GHz

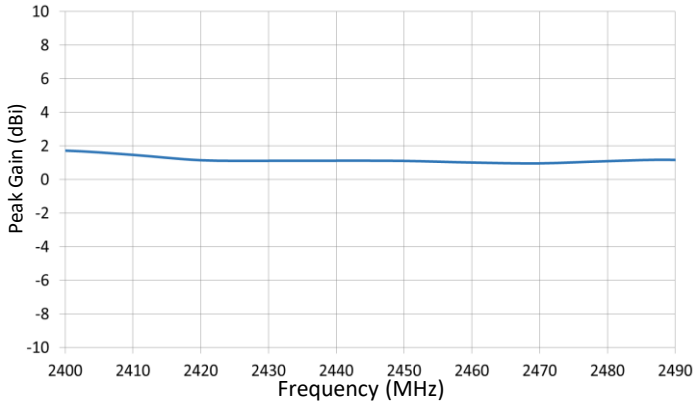

Peak Gain
(5.100 – 7.200) GHz

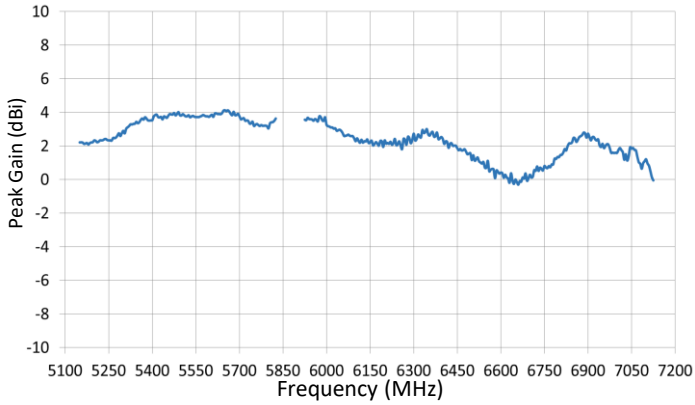

© 2022 KYOCERA AVX

tel +(1) 858.550.3820
email: antenna.info@kyocera-avx.com
1 Avx Blvd, Fountain Inn, SC 29644

Wi-Fi 6 & Wi-Fi 6E KYOCERA AVX Stamped Metal Embedded Antenna.
KYOCERA AVX produces a wide variety of standard and custom antennas to meet user needs.

Antenna Radiation Patterns

Typical Performance on 125 x 45 mm PCB
Measured @ 2.440 GHz

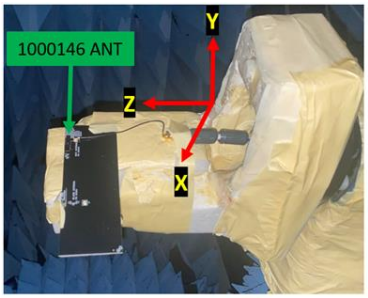

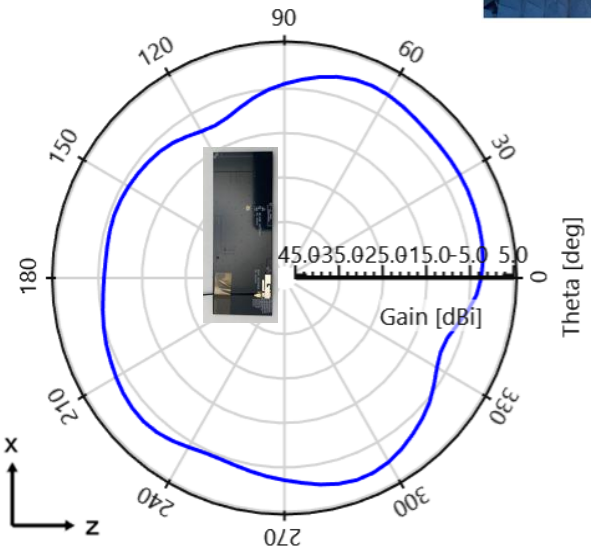

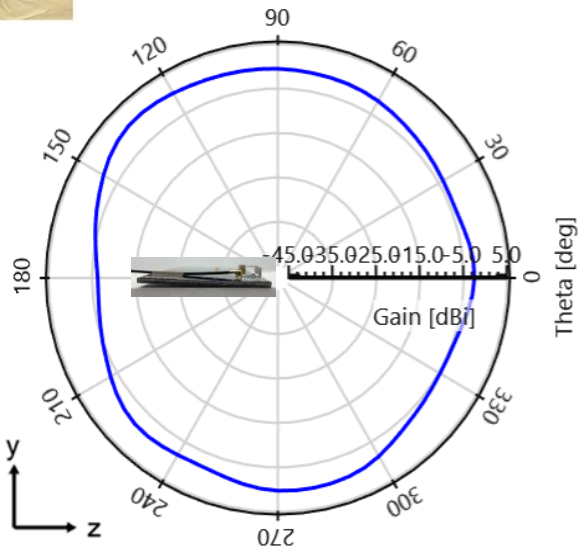

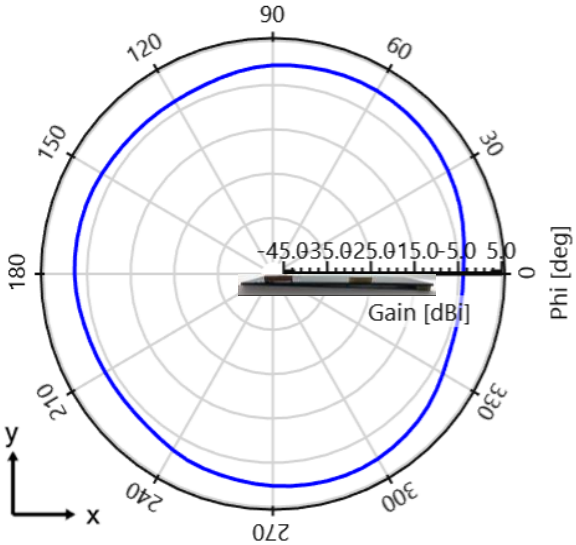

© 2022 KYOCERA AVX

tel +(1) 858.550.3820
email: antenna.info@kyocera-avx.com
1 Avx Blvd, Fountain Inn, SC 29644

Wi-Fi 6 & Wi-Fi 6E KYOCERA AVX Stamped Metal Embedded Antenna.
KYOCERA AVX produces a wide variety of standard and custom antennas to meet user needs.

Antenna Radiation Patterns

Typical Performance on 125 x 45 mm PCB
Measured @ 5.550 GHz

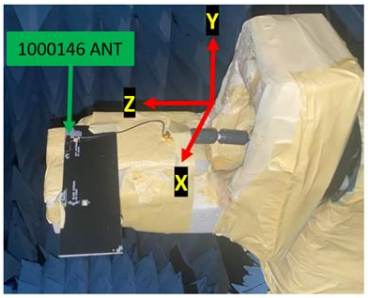

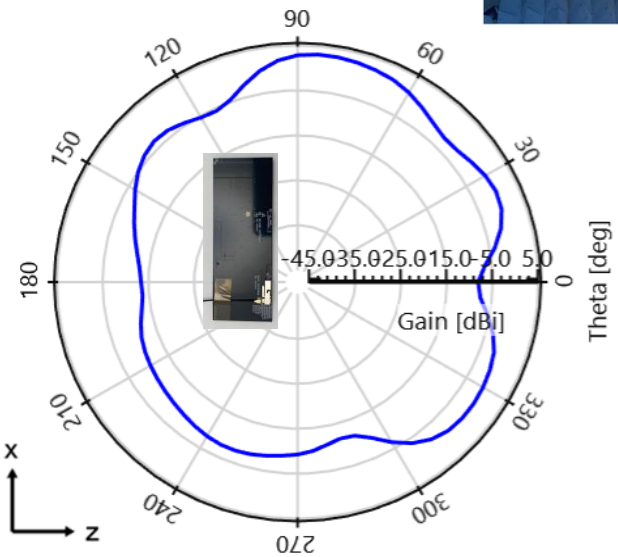

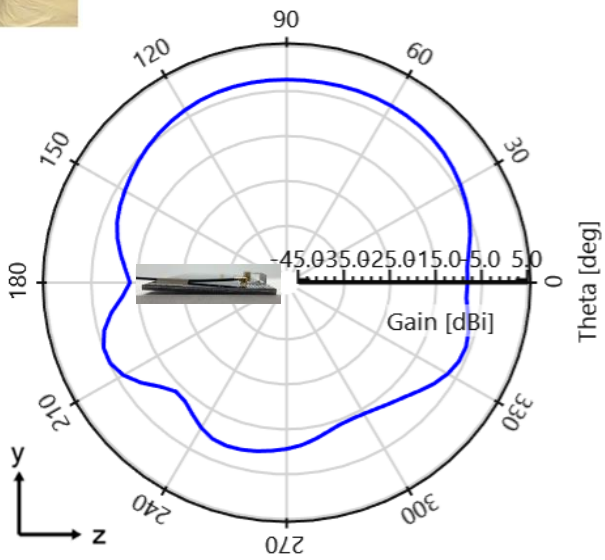

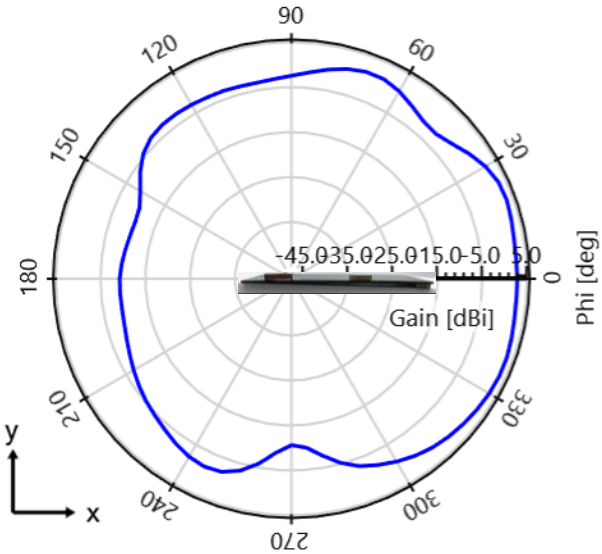

© 2022 KYOCERA AVX

tel +(1) 858.550.3820
email: antenna.info@kyocera-avx.com
1 Avx Blvd, Fountain Inn, SC 29644

Wi-Fi 6 & Wi-Fi 6E KYOCERA AVX Stamped Metal Embedded Antenna.
KYOCERA AVX produces a wide variety of standard and custom antennas to meet user needs.

Antenna Radiation Patterns

Typical Performance on 125 x 45 mm PCB
Measured @ 6.425 GHz

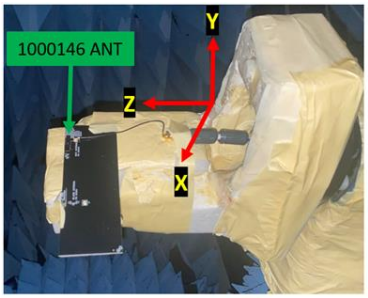

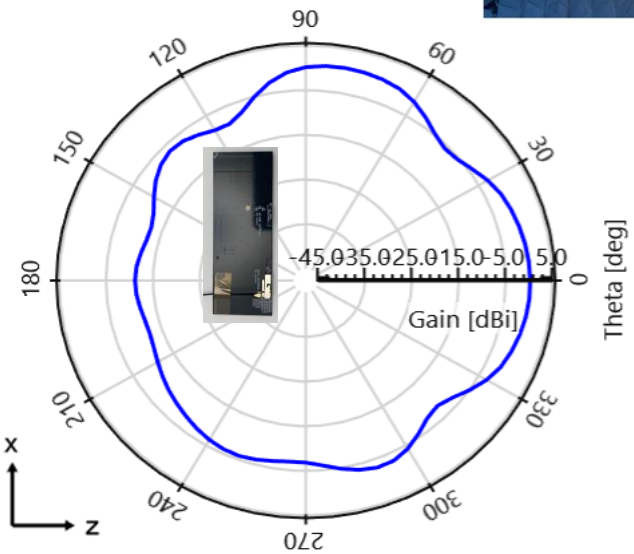

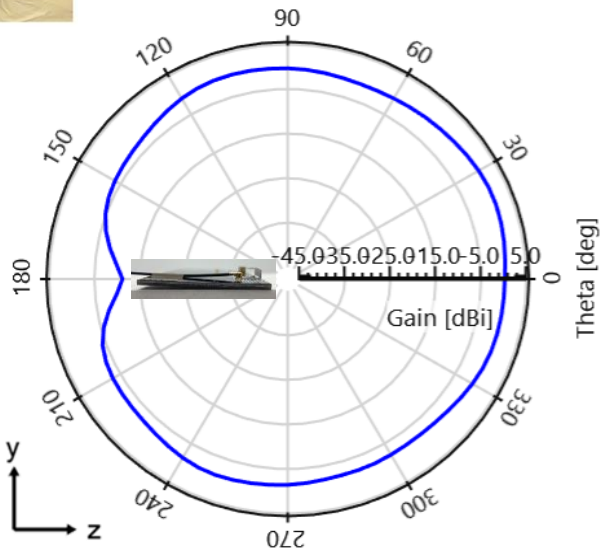

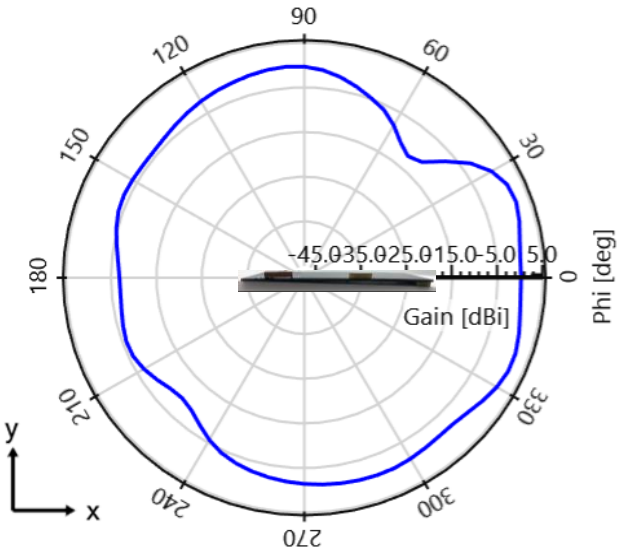

© 2022 KYOCERA AVX

tel +(1) 858.550.3820
email: antenna.info@kyocera-avx.com
1 Avx Blvd, Fountain Inn, SC 29644

Wi-Fi 6 & Wi-Fi 6E KYOCERA AVX Stamped Metal Embedded Antenna.
KYOCERA AVX produces a wide variety of standard and custom antennas to meet user needs.

Antenna Layout (Minor Tuning Layout)

Typical layout dimensions (mm)

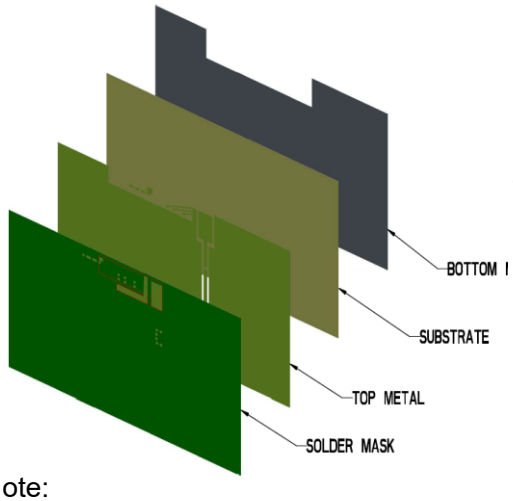

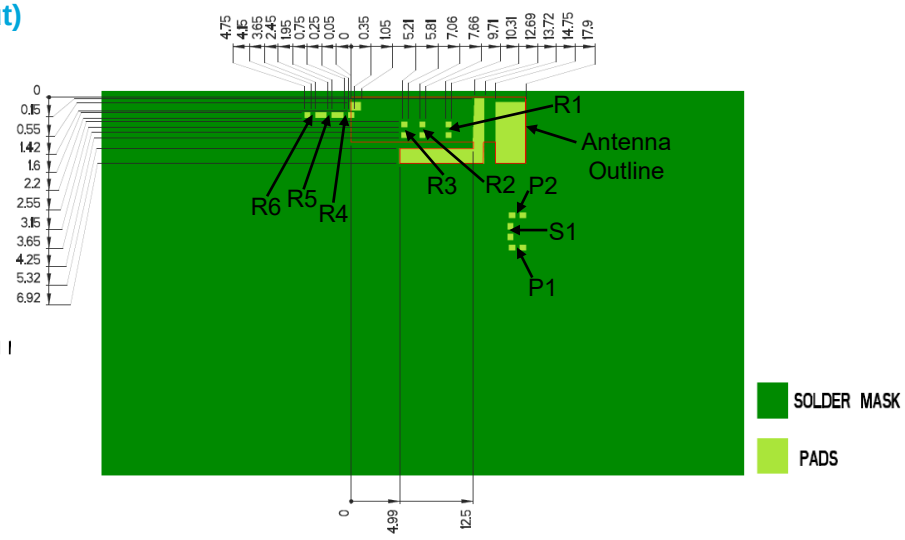

Note:
Layout has minor tuning capabilities to allow for small antenna footprint.

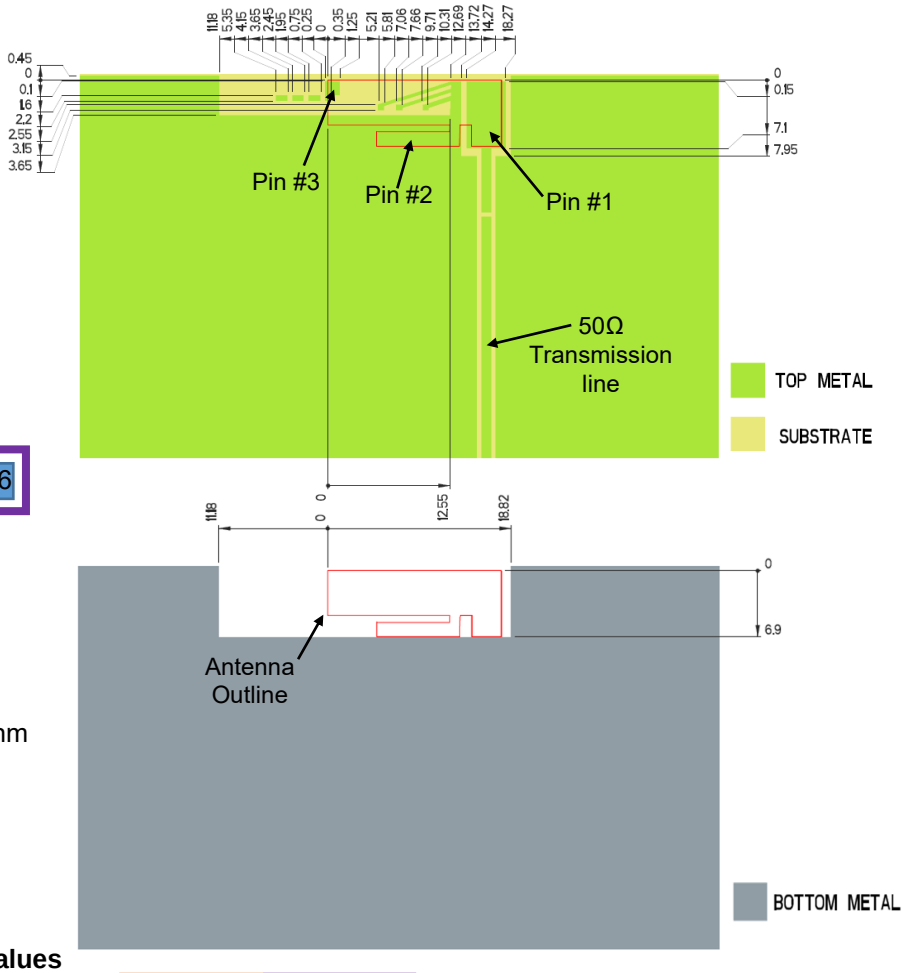

Pin Descriptions

Pin#	Description
1	Feed
2	Ground
3	Dummy Pad

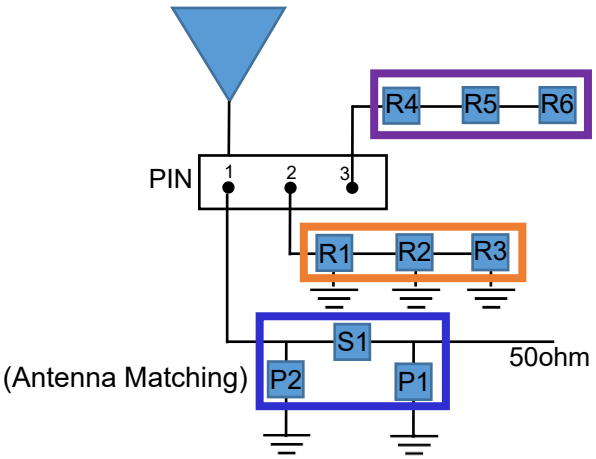

Antenna Matching & Tuning Component Values

	P1	S1	P2	R1 – R3	R4 – R6
Default Values	DNI	0Ω	DNI	DNI	DNI
Component Tolerance	N/A	N/A	N/A	N/A	N/A

tel +(1) 858.550.3820
email: antenna.info@kyocera-avx.com
1 Avx Blvd, Fountain Inn, SC 29644

Wi-Fi 6 & Wi-Fi 6E KYOCERA AVX Stamped Metal Embedded Antenna.
KYOCERA AVX produces a wide variety of standard and custom antennas to meet user needs.

Antenna Layout (Major Tuning Layout)

Typical layout dimensions (mm)

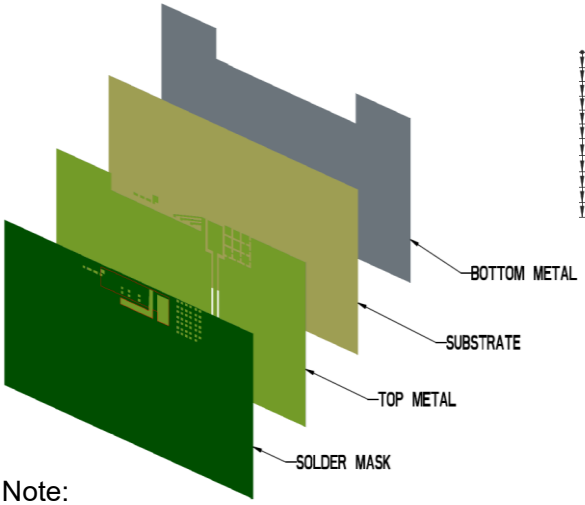

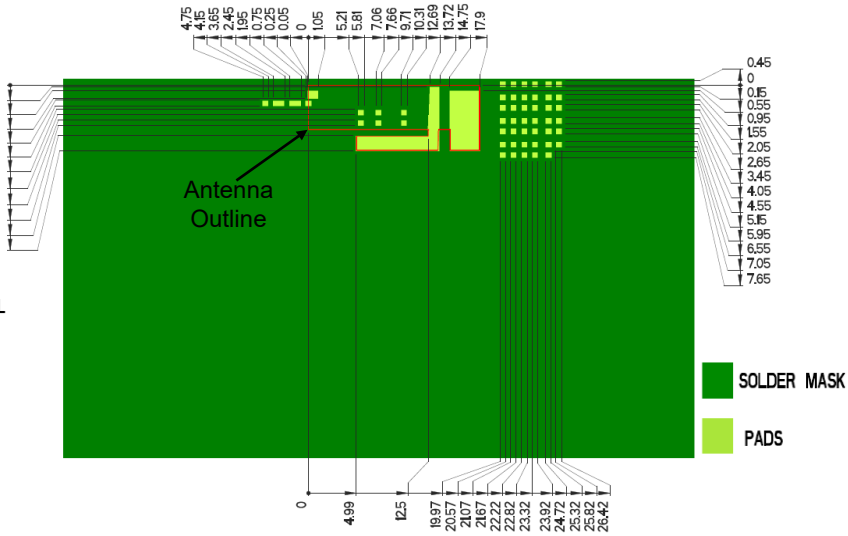

Note:
Layout has Major tuning capabilities to allow for robust tuning after board spin, instructions on **Antenna Matching Structure** page**.**

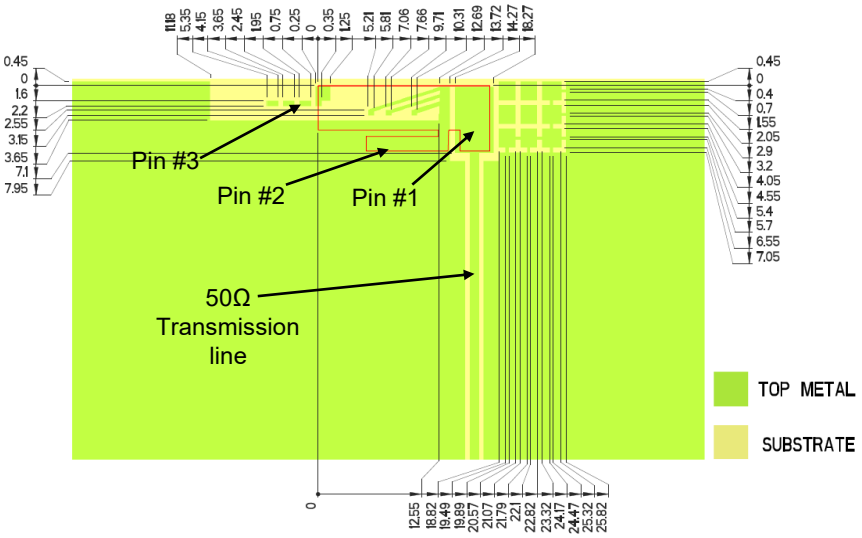

Pin Descriptions

Pin#	Description
1	Feed
2	Ground
3	Dummy Pad

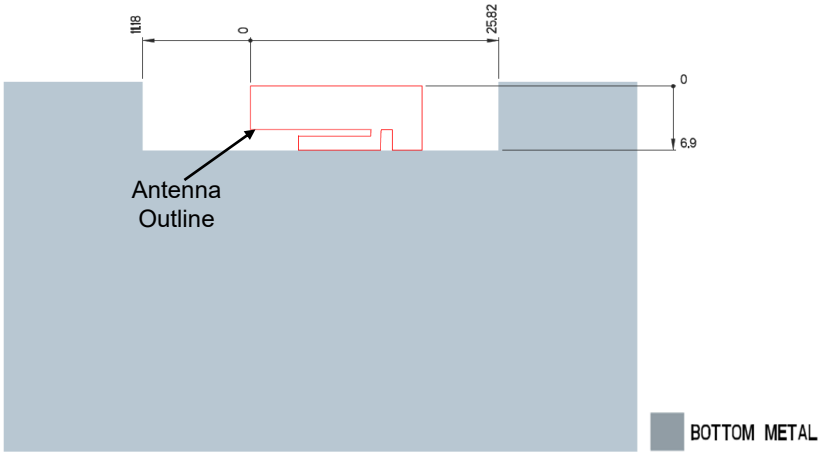

tel +(1) 858.550.3820
email: antenna.info@kyocera-avx.com
1 Avx Blvd, Fountain Inn, SC 29644

Wi-Fi 6 & Wi-Fi 6E KYOCERA AVX Stamped Metal Embedded Antenna.
KYOCERA AVX produces a wide variety of standard and custom antennas to meet user needs.

Antenna Matching Structure (Major Tuning Structure)

Typical matching values on 125 x 45 mm PCB

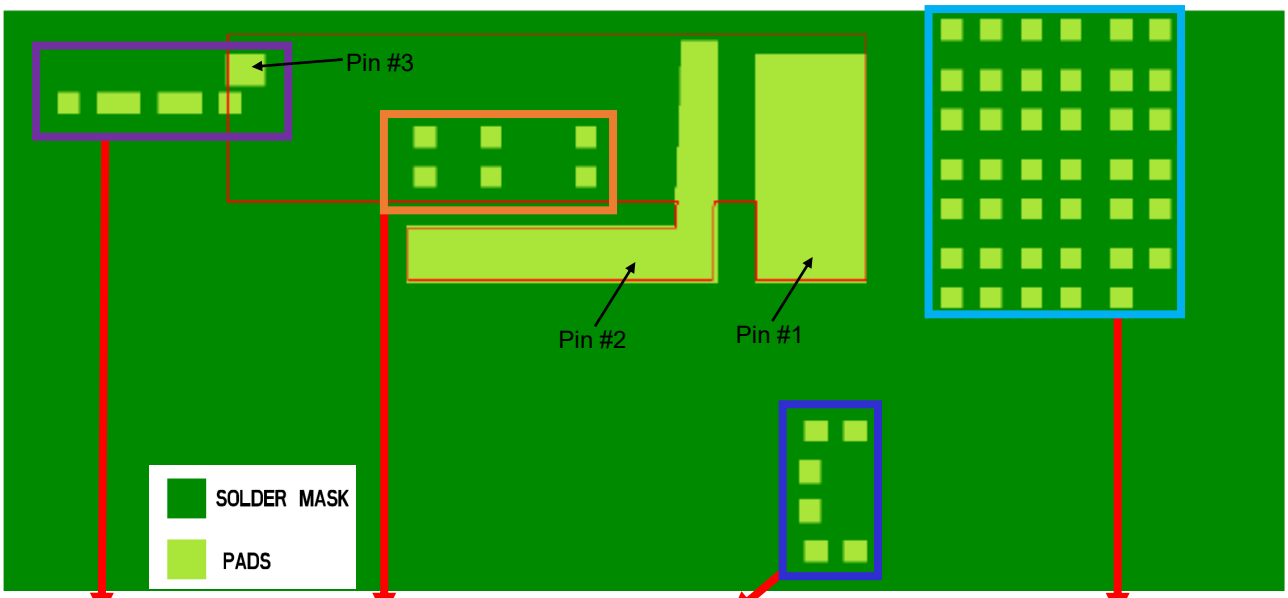

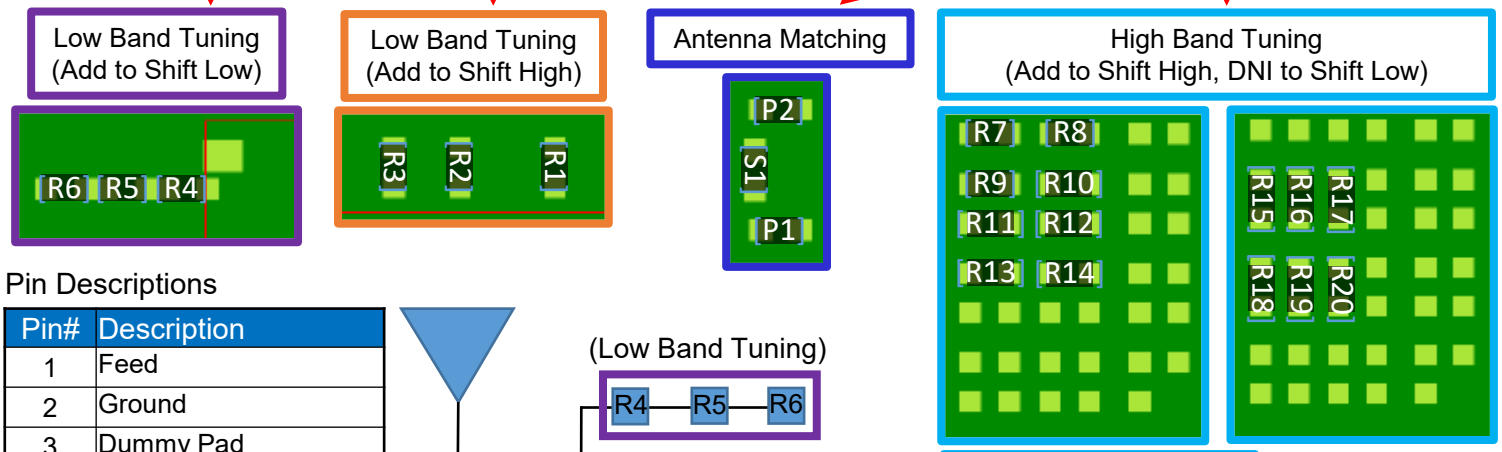

Pin Descriptions

Pin#	Description
1	Feed
2	Ground
3	Dummy Pad

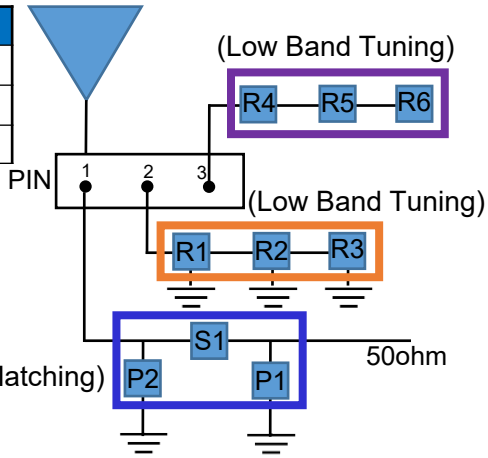

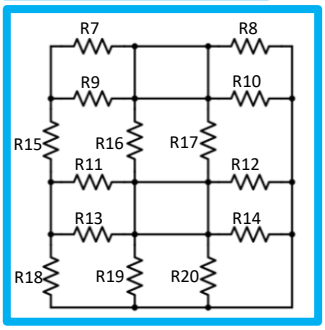

*Extend ground towards antenna feed with 0Ω component(s). R7- R20 can improve high band bandwidth/ performance with ground coupling.

	P1	S1	P2	R1 – R3	R4 – R6	R7 – R14	R15 - R20
Default Values	DNI	0Ω	DNI	DNI	DNI	DNI	DNI
Tolerance	N/A	N/A	N/A	N/A	N/A	N/A	N/A

tel +(1) 858.550.3820
email: antenna.info@kyocera-avx.com
1 Avx Blvd, Fountain Inn, SC 29644

Appendix 1

Appendix 1 gives instructions on how to achieve CBRS/n78 performances through layout and impedance matching network. (3.300 – 3.800 GHz)

Frequency (GHz)	3.300 – 3.800
Peak Gain	4.21 dBi
Average Efficiency	76%
VSWR Match	2.0:1 max
Feed Point Impedance	50 ohms unbalanced
Polarization	Linear
Power Handling	0.5 Watt CW

*Data shown above has Appendix 1 matching applied on (1000146-03) 100 x 50 mm pcb.

© 2022 KYOCERA AVX

tel +(1) 858.550.3820
email: antenna.info@kyocera-avx.com
1 Avx Blvd, Fountain Inn, SC 29644

Appendix 1 CBRS/n78 KYOCERA AVX Stamped Metal Embedded Antenna.
KYOCERA AVX produces a wide variety of standard and custom antennas to meet user needs.

Appendix 1 (1000146-03)

Typical Performance on 100 x 50 mm PCB

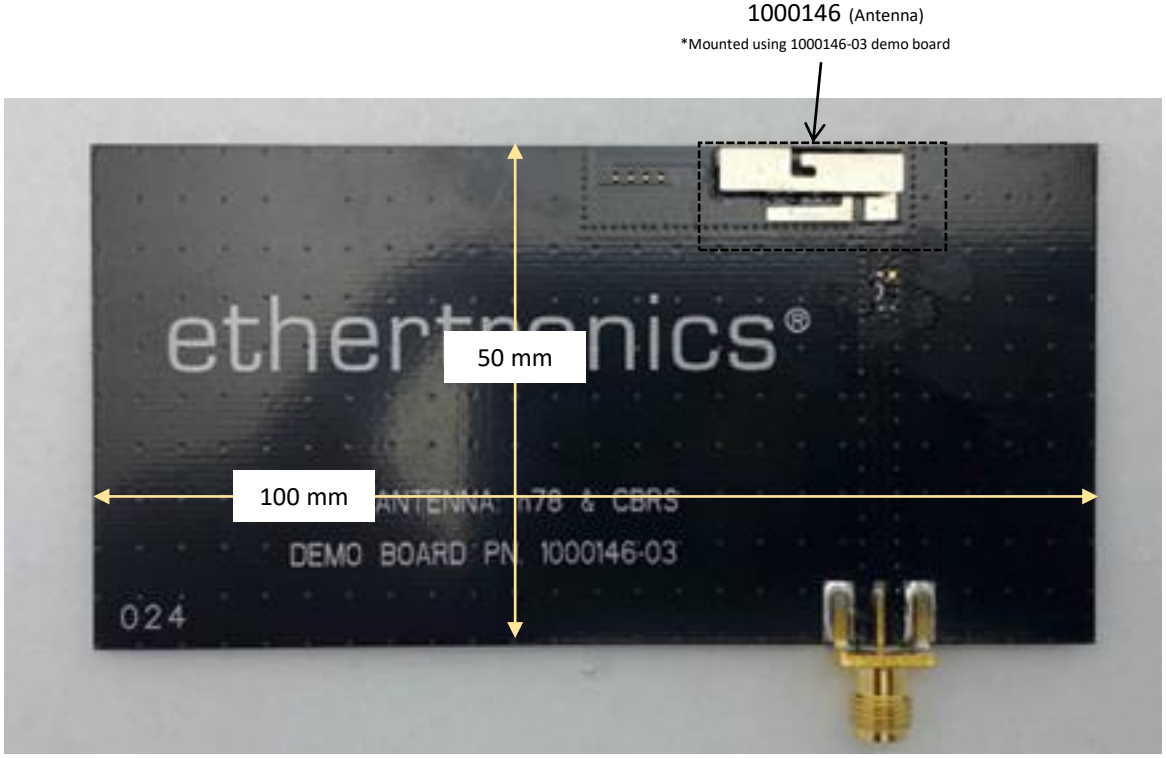

tel +(1) 858.550.3820
email: antenna.info@kyocera-avx.com
1 Avx Blvd, Fountain Inn, SC 29644

Appendix 1 CBRS/n78 KYOCERA AVX Stamped Metal Embedded Antenna.
KYOCERA AVX produces a wide variety of standard and custom antennas to meet user needs.

Appendix 1 VSWR and Efficiency Plots

Typical Performance on 100 x 50 mm PCB

VSWR

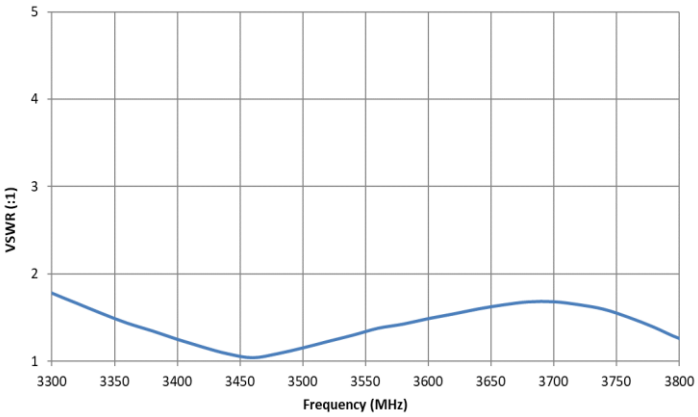

Efficiency

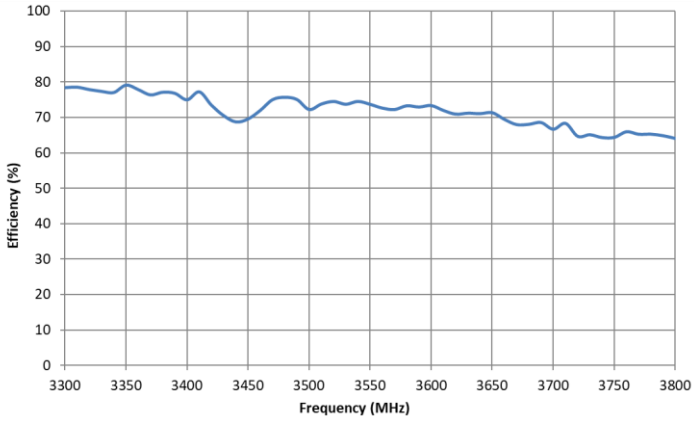

Peak Gain

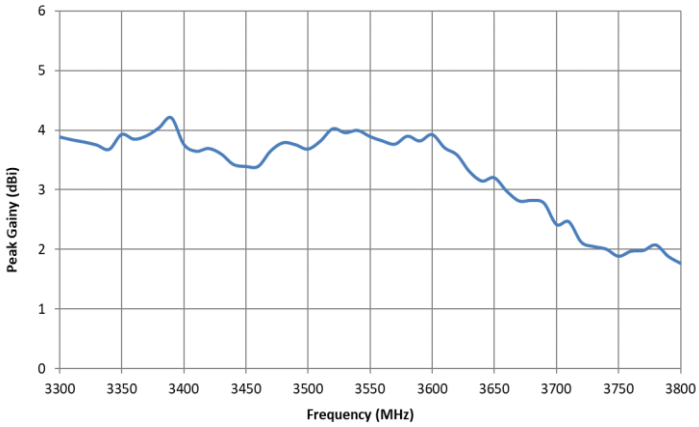

© 2022 KYOCERA AVX

tel +(1) 858.550.3820
email: antenna.info@kyocera-avx.com
1 Avx Blvd, Fountain Inn, SC 29644

Appendix 1 CBRS/n78 KYOCERA AVX Stamped Metal Embedded Antenna.
KYOCERA AVX produces a wide variety of standard and custom antennas to meet user needs.

Appendix 1 Antenna Radiation Patterns

Typical Performance on 100 x 50 mm PCB
Measured @ 3500 MHz

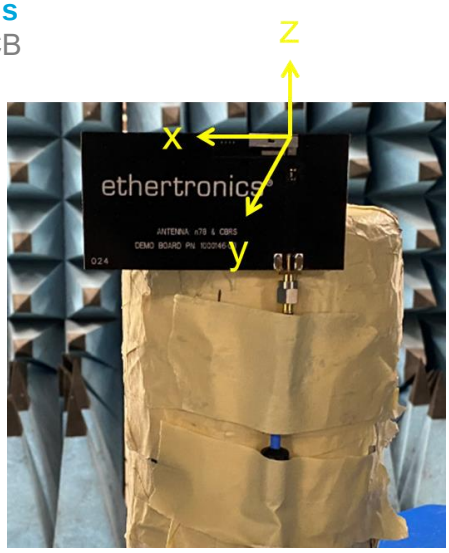

Measured at 3500 MHz

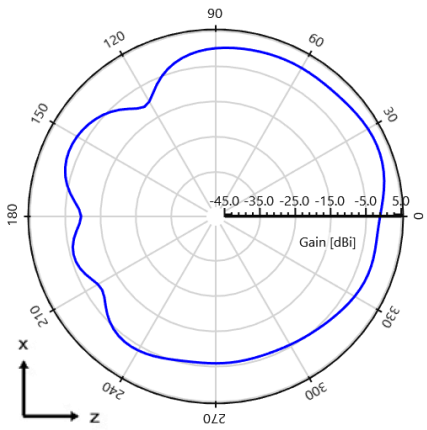

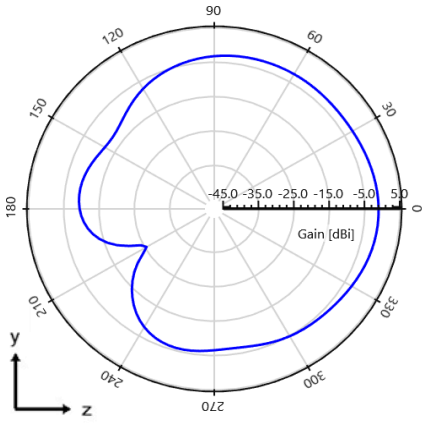

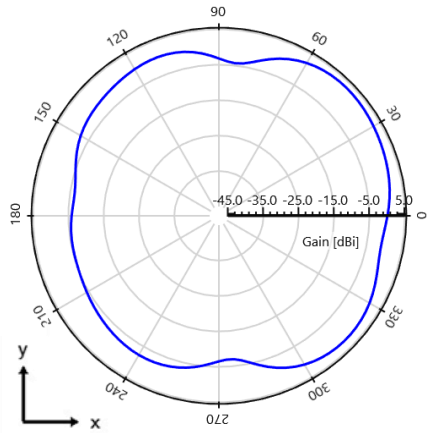

© 2022 KYOCERA AVX

tel +(1) 858.550.3820
email: antenna.info@kyocera-avx.com
1 Avx Blvd, Fountain Inn, SC 29644

Appendix 1 CBRS/n78 KYOCERA AVX Stamped Metal Embedded Antenna.
KYOCERA AVX produces a wide variety of standard and custom antennas to meet user needs.

Antenna Layout (CBRS/n78 performances)

Typical layout dimensions (mm)

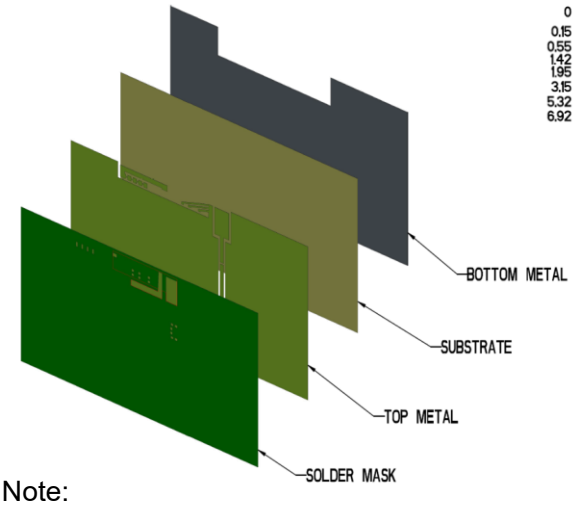

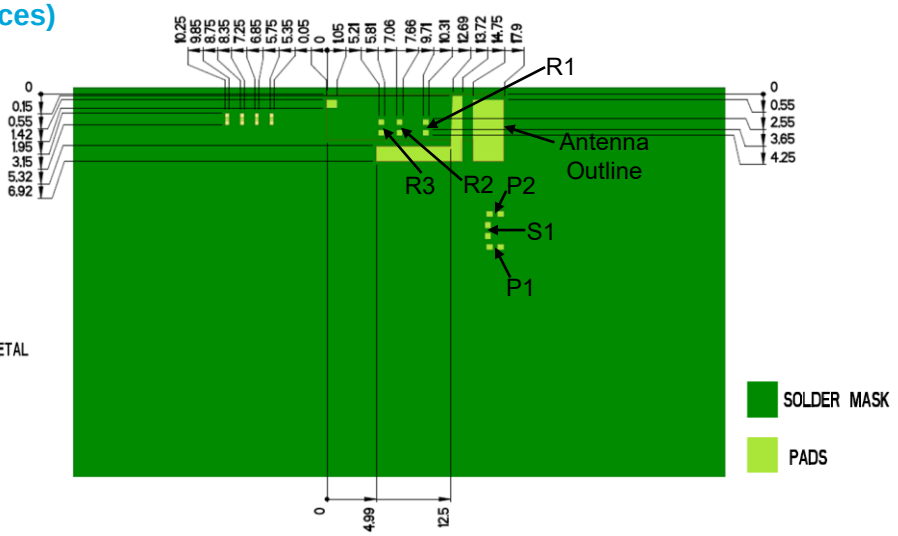

Note:
Layout has minor tuning capabilities to allow for small antenna footprint.

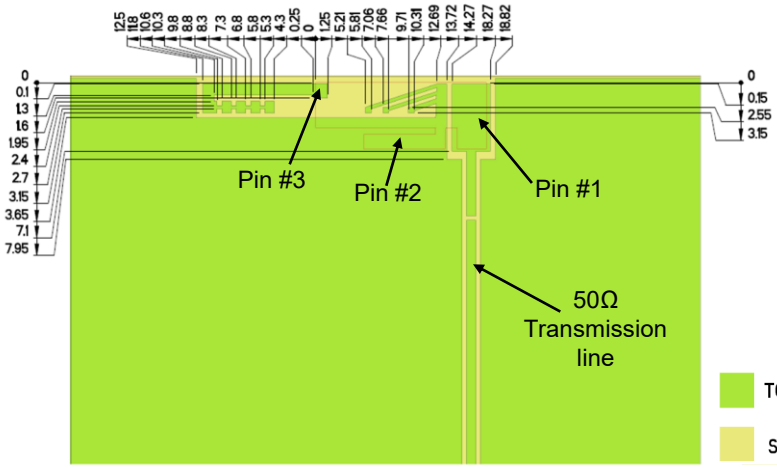

Pin Descriptions

Pin#	Description
1	Feed
2	Ground
3	Dummy Pad

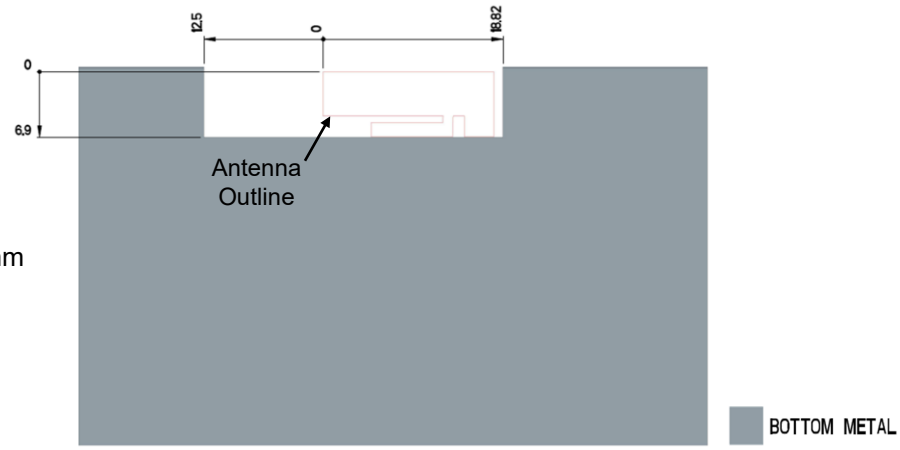

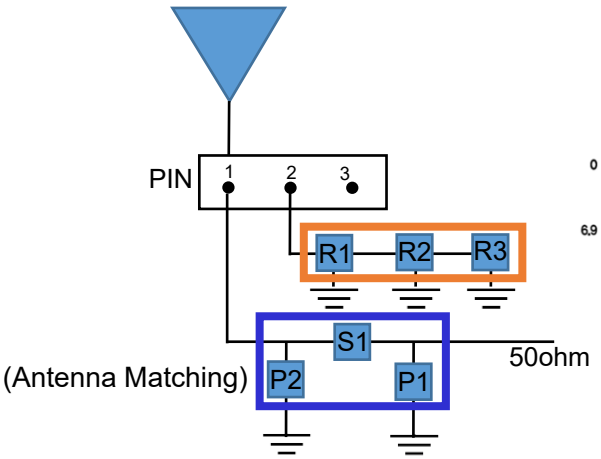

Antenna Matching & Tuning Component Values

	P1	S1	P2	R1 – R3
Default Values	DNI	1.5 nH	0.8 pF	DNI
Component Tolerance	N/A	(+/-0.05)	(+/-0.05)	N/A

tel +(1) 858.550.3820
email: antenna.info@kyocera-avx.com
1 Avx Blvd, Fountain Inn, SC 29644

Appendix 1 CBRS/n78 KYOCERA AVX Stamped Metal Embedded Antenna.
KYOCERA AVX produces a wide variety of standard and custom antennas to meet user needs.

Antenna Matching Structure

Typical matching values on 100 x 50 mm PCB

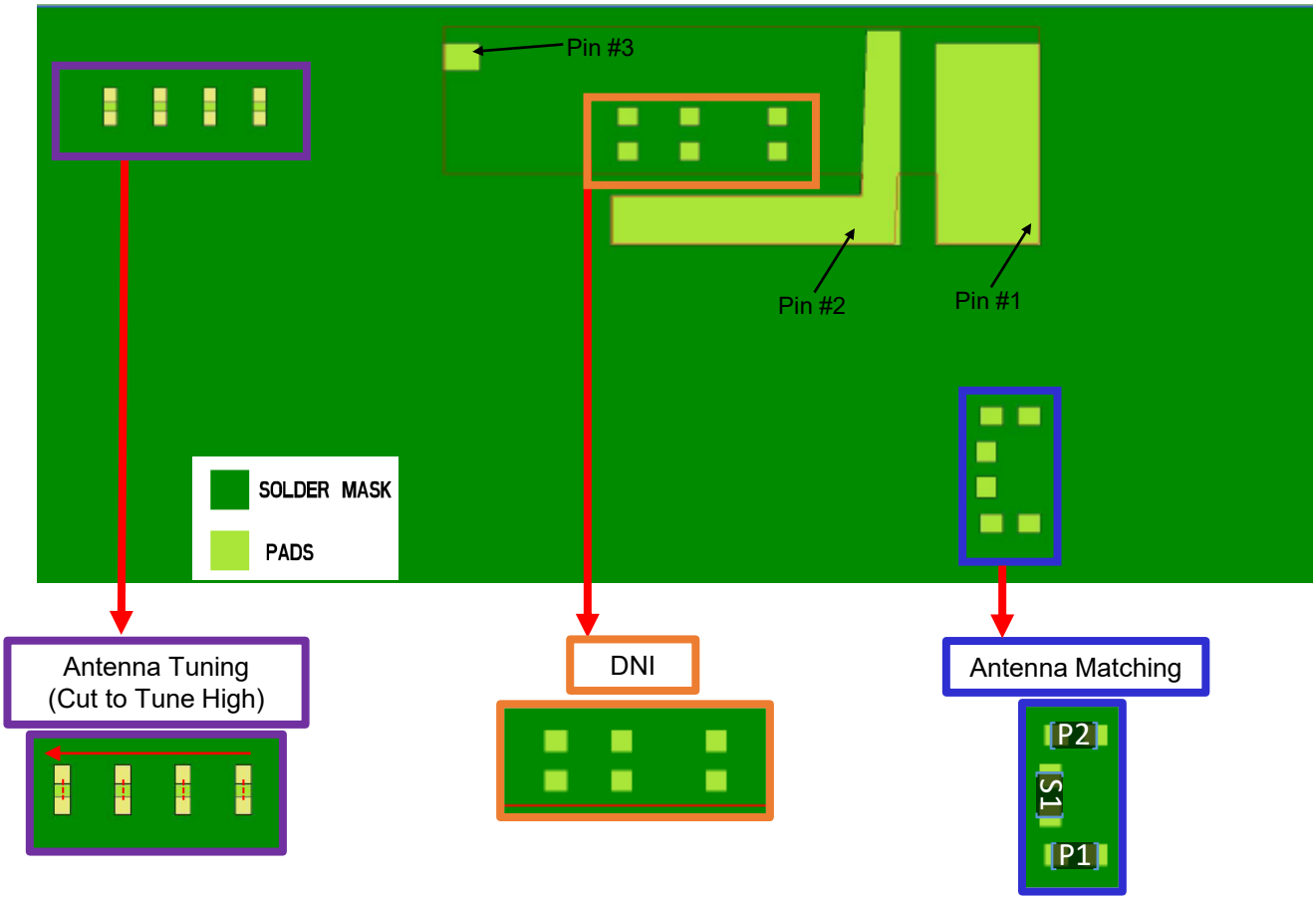

Pin Descriptions

Pin#	Description
1	Feed
2	Ground
3	Dummy Pad

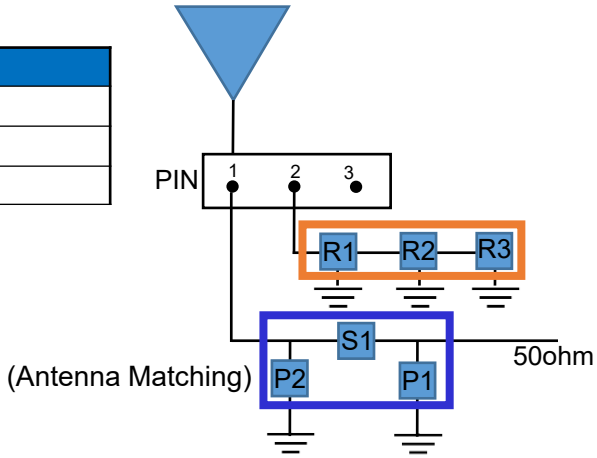

Antenna Matching & Tuning Component Values

	P1	S1	P2	R1 – R3
Default Values	DNI	1.5 nH	0.8 pF	DNI
Component Tolerance	N/A	(+/-0.05)	(+/-0.05)	N/A

tel +(1) 858.550.3820
email: antenna.info@kyocera-avx.com
1 Avx Blvd, Fountain Inn, SC 29644