Blue Air

Open-Ear Wireless Headset

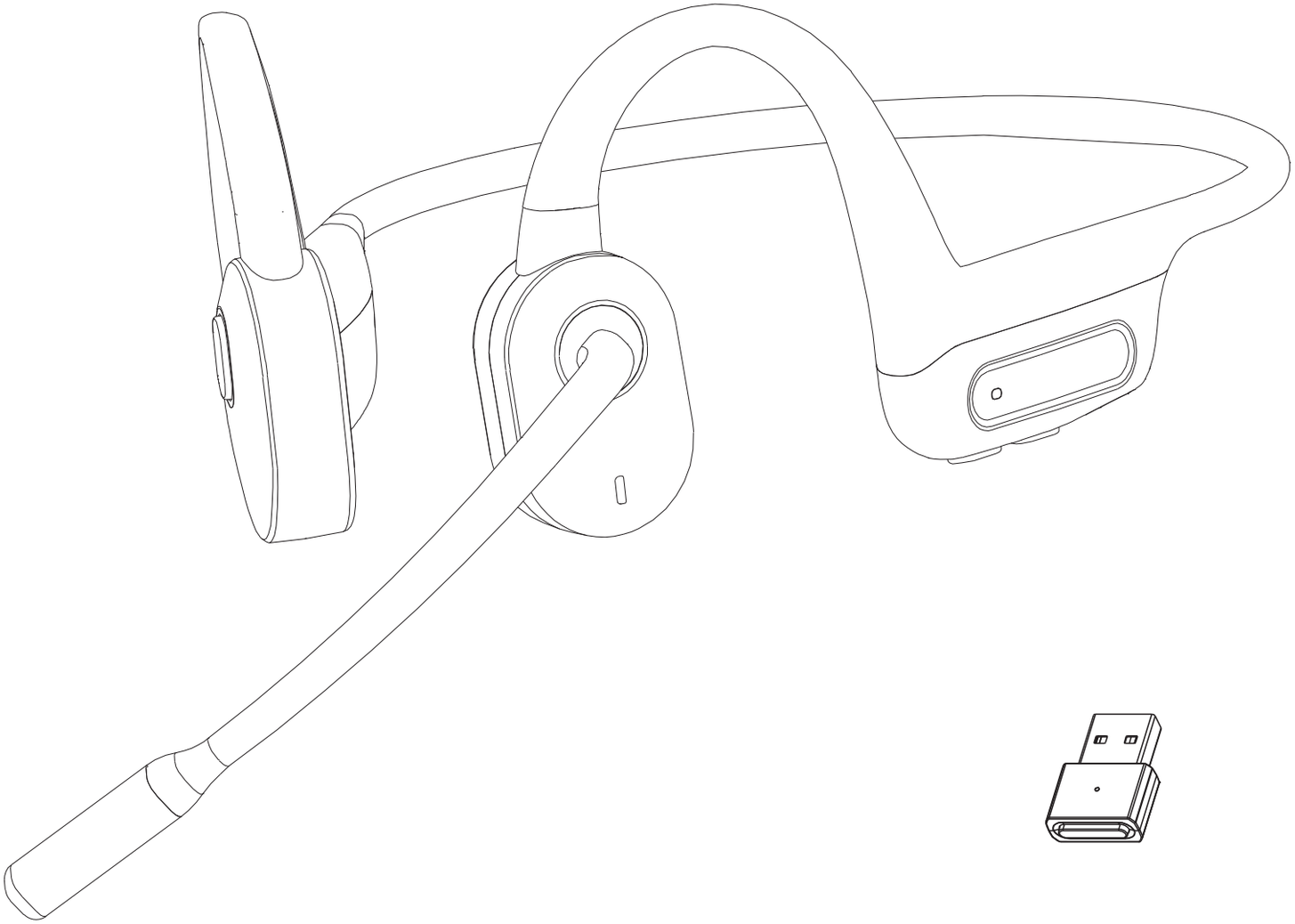

USER MANUAL

WELCOME

Thank you for choosing Blue Air Wireless Headset. Please read below instructions carefully before use. It will help you set up and operate this product properly and enjoy the advanced features.

PACKING LIST

Blue Air Wireless Headset x1

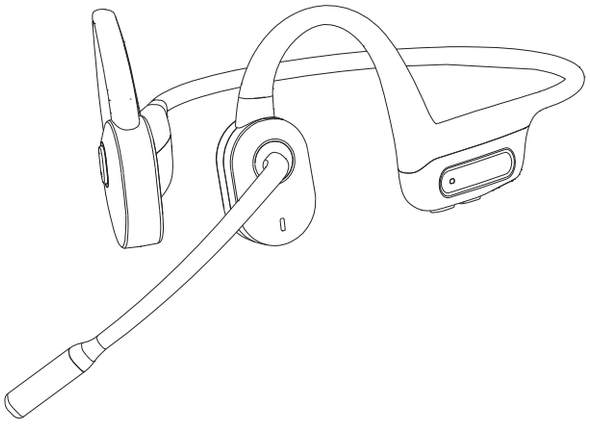

USB Dongle x1

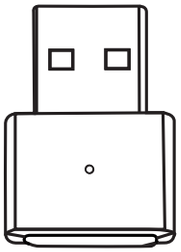

USB Charging Cable x1

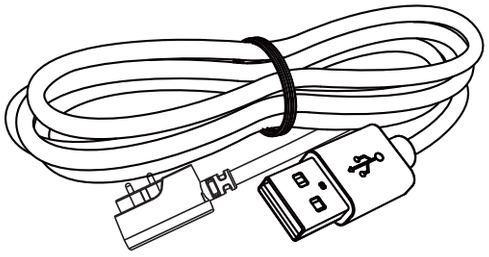

User Manual x 1

OVERVIEW

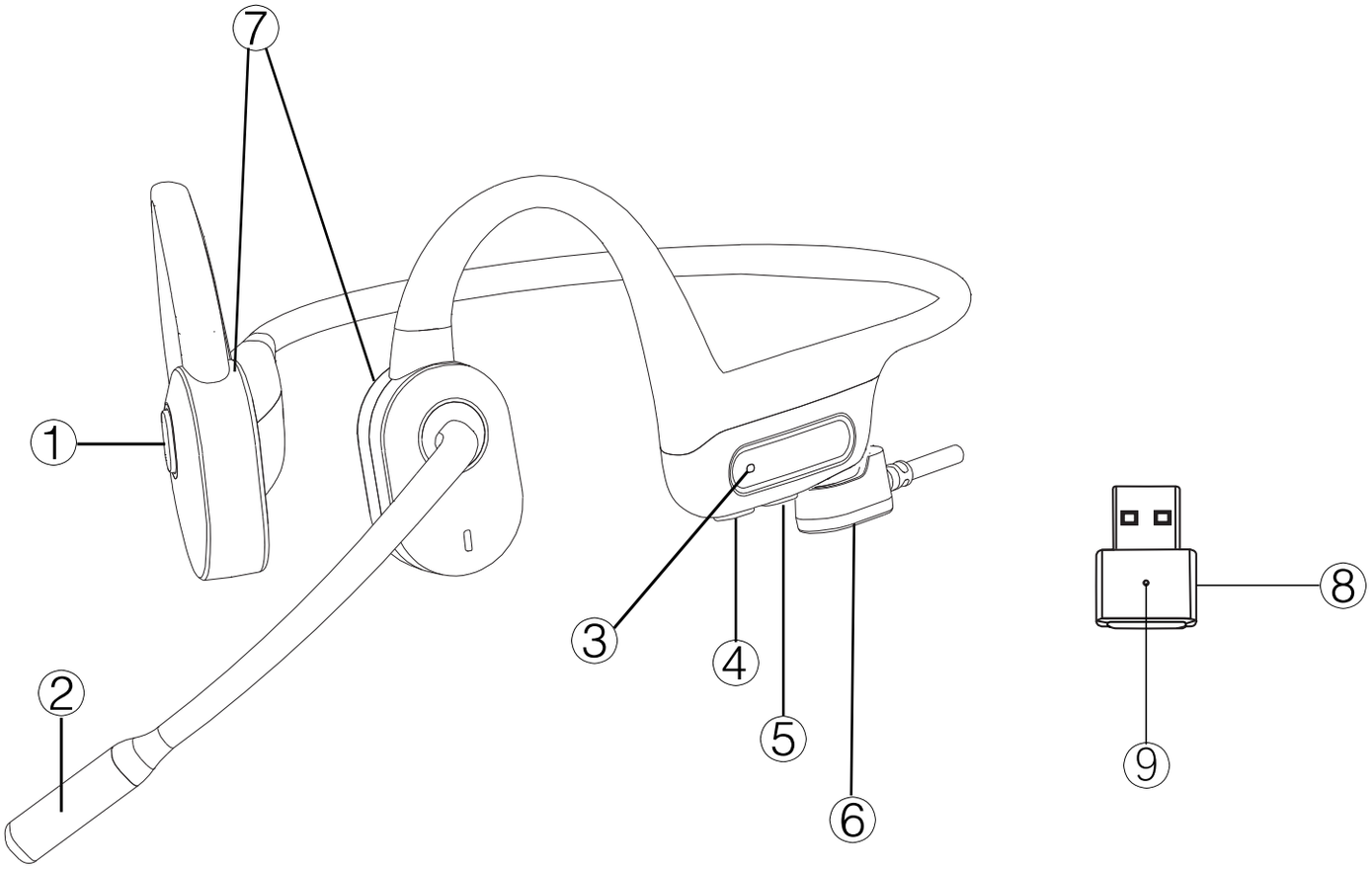

① Multifunction Button(MFB)

② Microphone

③ LED Indicator

④ Volume+

⑤ Volume-

⑥ Magnetic Charging Port

⑦ Speaker

⑧ Dongle Button

⑨ LED Indicator of Dongle

HOW TO SET UP BLUE AIR

1. Charge

Charge the headset via the magnetic induction USB-A cable included. The LED indicator turns red when charging, and turns off when charging is complete.

2. Low Battery Reminder

When the battery is low, the LED indicator will flash red per 10 seconds to remind you low battery status.

3. Pair

Ensure the headset is power off. Press and hold the MFB for 5 - 6 seconds till you hear the voice prompt " power on " first and then "pairing ". Meanwhile, the LED indicator will flash red & blue alternatively.

4. Connect (Smartphone)

Open your phone' s Bluetooth setting and select "Blue Air" to pair with, The LED indicator will turn solid blue once the connection is complete.

5. Connect via USB Dongle for PC & Laptop

Plug the USB Dongle into the PC' s USB port. Press and hold the Dongle button for 2 seconds , the LED indicator of Dongle will flash red & blue alternatively , which shows the Dongle has been in " Pairing " mode. When the headset is setup in " Pairing " mode, the both devices will be connected automatically.

6. Auto Reconnect

The headset will automatically reconnect to the paired device last time.

7. Power On/Power Off

Press and hold the MFB button for 3 seconds till you hear the voice prompt " power on "
Press and hold the MFB button for 3 seconds till you hear the voice prompt " power off "

Note: the Dongle is compatible with both Microsoft and Mac system.

HOW TO CONNECT YOUR SMARTPHONE

① Ensure the headset is in Pairing mode (see “HOW TO SET UP BLUE AIR” in Page 3).

② Activate your phone's bluetooth function by choosing “settings-Bluetooth-Activate” .

③ Search the bluetooth items then find your "Blue Air", and click to connect.

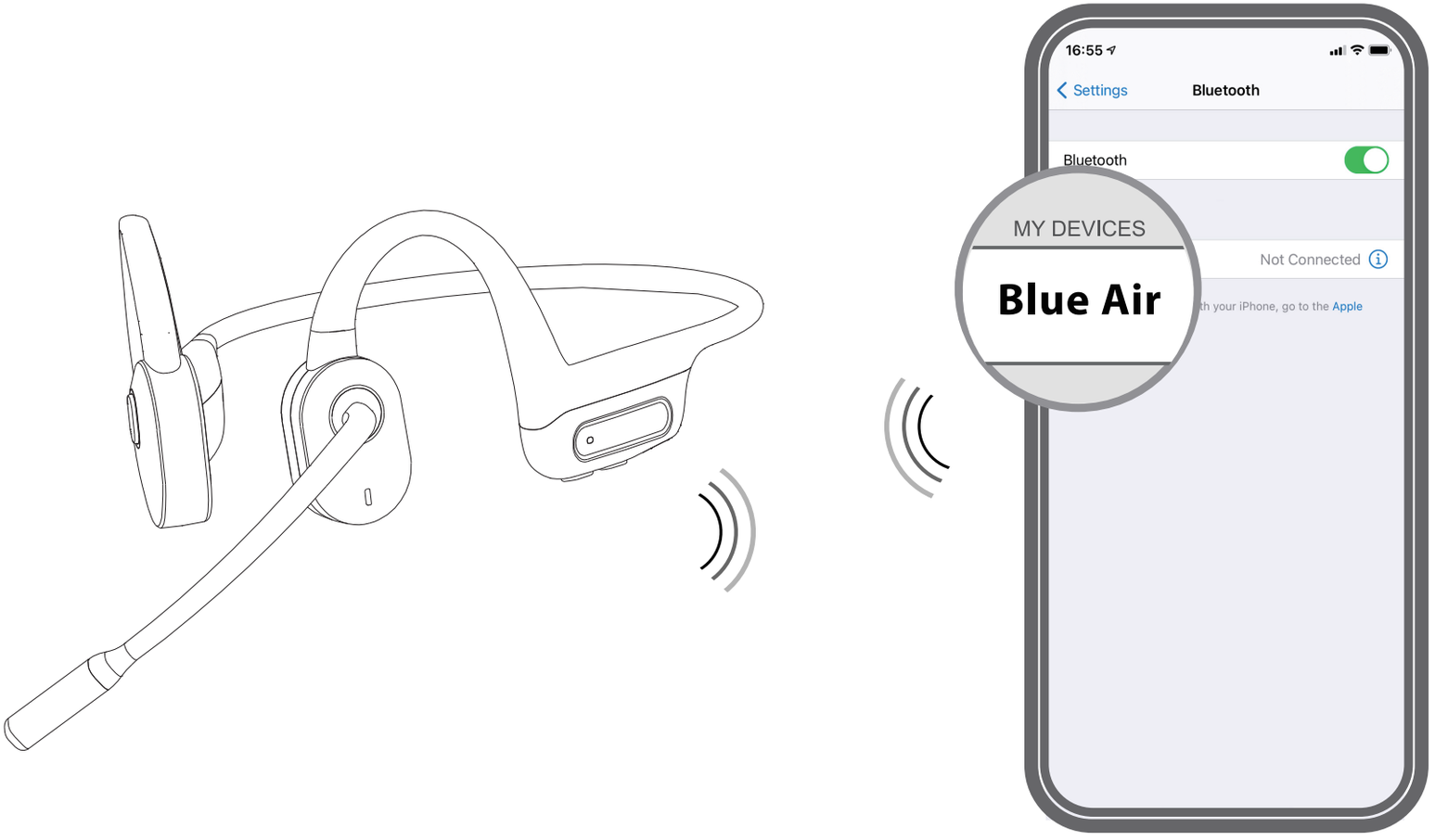

HOW TO CONNECT YOUR PC/MAC

① Ensure the headset is in Pairing mode (see "HOW TO SET UP BLUE AIR" in Page 3).

② Plug the USB dongle into the PC's USB port. Press and hold the Dongle Button for 2 seconds until the LED indicator of dongle flashes blue&red alternatively (entering Pairing mode).

③ Put the headset and Dongle together as close as possible for minimum 3 seconds. Once LED indicators of both devices turn blue ,the pairing is successful.

④ Double click MFB of the dongle to lock the paired device ID address.

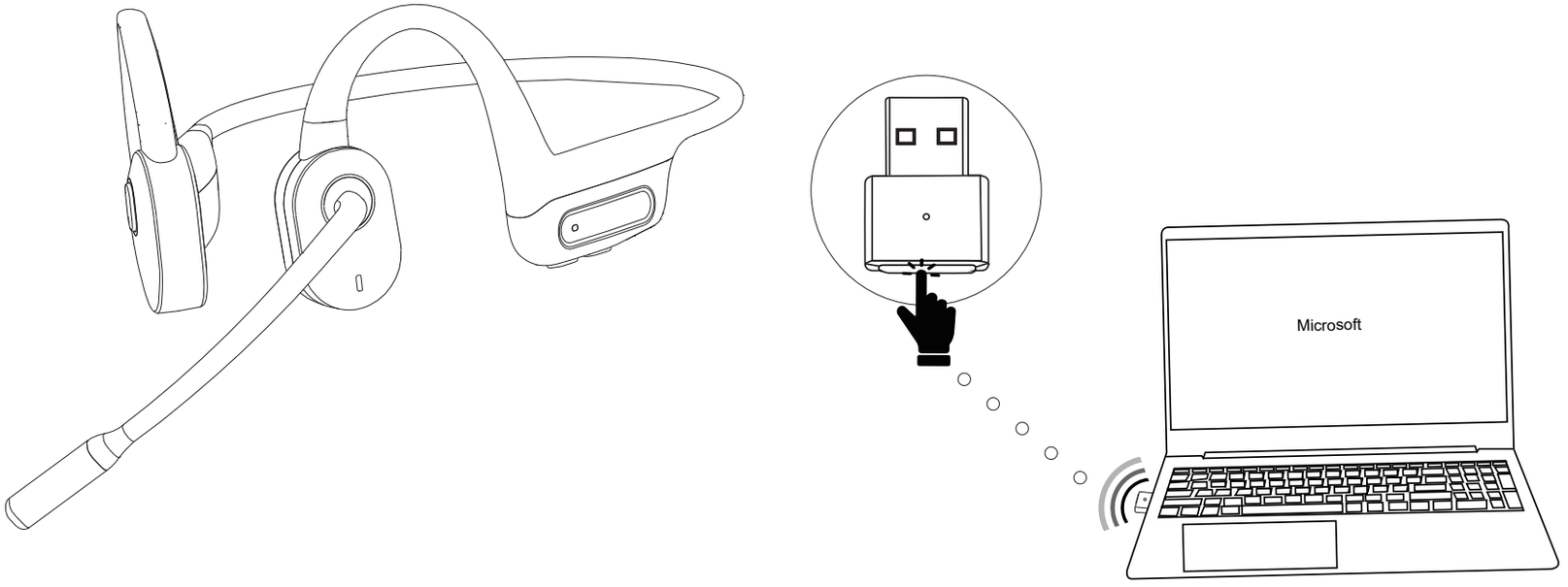

HOW TO CHARGE THE HEADSET

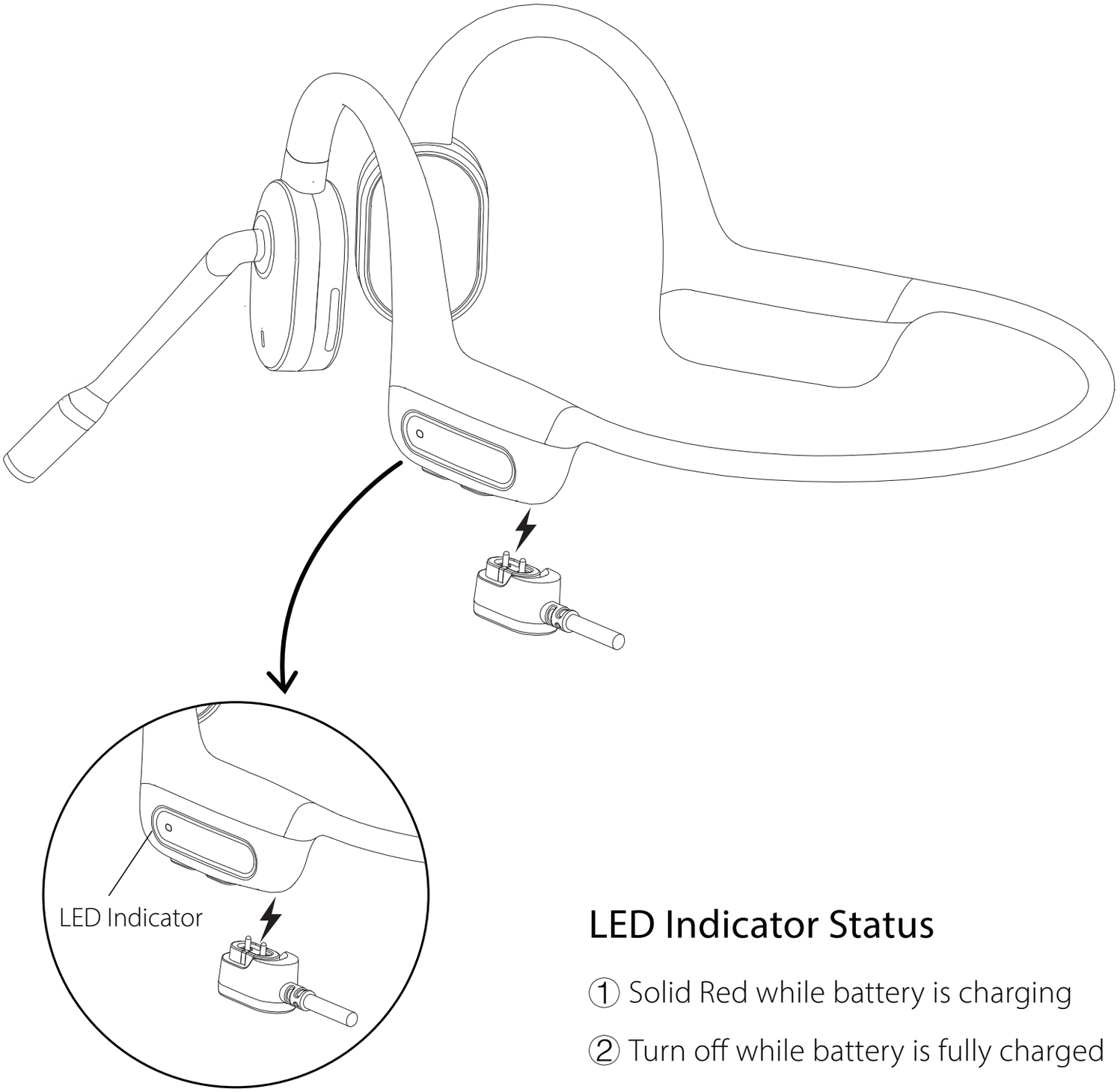

LED Indicator Status

① Solid Red while battery is charging

② Turn off while battery is fully charged

MULTIFUNCTION BUTTON(MFB)

While your headset and phone are connected.

Function	Action	Voice Prompt
Power on	Press and hold MFB for 3s	Power on
Power off	Press and hold MFB for 3s	Power off
Pairing	Press and hold MFB for 5s	Pairing
Play/Pause	Click MFB once	
Answer call	Short press MFB when receiving a call	
End call	Short press MFB during a call	
Ingnore a call	Press and hold MFB for 1s	
Activate voice assistant	Double-click MFB when the headset is in connect and standby status	

VOLUME+ & VOLUME-

While your headset and phone are connected.

Function	Action	Voice Prompt
Next song	Long press Volume+ button while playing music	
Previous song	Long press Volume- button while playing music	
Mute	Short press Volume+ and Volume- buttons at the same time while phone calling	Microphone mute
Mute off	Short press Volume+ and Volume- button at the same time while the microphone is mute	
Adjust volume	Press Volume+ / Volume- button while on calling or playing music	You will hear beep when the volume reaches its max or min level

HEADSET SPECIFICATIONS

Model name	Blue Air	Frequency	20Hz~20KHz
Speaker	Open air speaker	Microphone type	Omnidirectional microphone
Bluetooth version	Bluetooth V5.1	Bluetooth range	Up to 40 Inches
Charge time	1.5 Hours	Battery	Lithium battery
Compatible profiles	HFP/HSP/A2DP	Weight	34g
Talk time	16 Hours	Standby time	12 Days
Listening time	8 Hours	Warranty	2 year
Battery capacity	150mAh	Operational temperature	+5℃ to +40℃
Charge voltage	5V ⎓ 1A		

LED INDICATOR(HEADSET)

Solid red	Charging	Flashes blue per 3s	Disconnect
Solid blue	Connected	Flashes red per 10s	Low battery
Flashes red and blue	Pairing mode	OFF	Fully Charged

STORAGE & MAINTENANCE

1. The headset should be kept in cool and dry place, with a temperature from 0℃ to 45℃. Working in an extremely cold, extremely hot or high humidity environ mentmay limit the working time and shorten the battery life of the headset.

2. Please charge the headset when it has not been in use for an extended period of time.

3. Listening at a high volume may damage your hearing and distort the audio quality.

4. Please only clean headset with a soft dry cloth.

5. Please do not charge headset immediately after exercising in order to prevent damage to the headset circuitry that can be caused by liquid residue exposure.

6. Keeping the charging port dry will reduce the possibility of damaging the headset.

SERVICE

Blue Air Promises that under normal use, operation, and maintenan ceconditions, we will guarantee full refund within 60 days and 24-Month Quality Assurance by free replacement.

Please contact support@blueairaudio for further assistance, you will receive friendly customer support within one working day.

DISCARDING PRODUCT GUIDELINES

Please do not discard the electronic headset parts in the same receptacle as your daily garbage. Reference your country or region's guidelines on appropriate measures for collecting discarded electronic products.Please consult local authorities for more details.

FCC Warning

This device complies with part 15 of the FCC Rules. Operation is subject to the following two conditions: (1) This device may not cause harmful interference, and (2) this device must accept any interference received, including interference that may cause undesired operation.

Any Changes or modifications not expressly approved by the party responsible for compliance could void the user's authority to operate the equipment.

Note: This equipment has been tested and found to comply with the limits for a Class B digital device, pursuant to part 15 of the FCC Rules. These limits are designed to provide reasonable protection against harmful interference in a residential installation. This equipment generates uses and can radiate radio frequency energy and, if not installed and used in accordance with the instructions, may cause harmful interference to radio communications. However, there is no guarantee that interference will not occur in a particular installation. If this equipment does cause harmful interference to radio or television reception, which can be determined by turning the equipment off and on, the user is encouraged to try to correct the interference by one or more of the following measures:

-Reorient or relocate the receiving antenna.

-Increase the separation between the equipment and receiver.

-Connect the equipment into an outlet on a circuit different from that to which the receiver is connected.

-Consult the dealer or an experienced radio/TV technician for help.

Specific Absorption Rate (SAR) information:

This Open-Ear Wireless Headset meets the government's requirements for exposure to radio waves. The guidelines are based on standards that were developed by independent scientific organizations through periodic and thorough evaluation of scientific studies. The standards include a substantial safety margin designed to assure the safety of all persons regardless of age or health.

FCC RF Exposure Information and Statement

The SAR limit of USA (FCC) is 1.6 W/kg averaged over one gram of tissue. Device types: Blue Air-OP10 (FCC ID: 2BF5S-BLUEAIROP10) has also been tested against this SAR limit. The highest SAR value reported under this standard during product certification for use at the ear is 0.353W/kg. This device was tested for typical head operations with the back of the headset kept 0mm from the head.