LICITTI

POWER THIS MOMENT

# DC BATTERY BOX PRO

## OWNER'S MANUAL & SAFETY INSTRUCTIONS

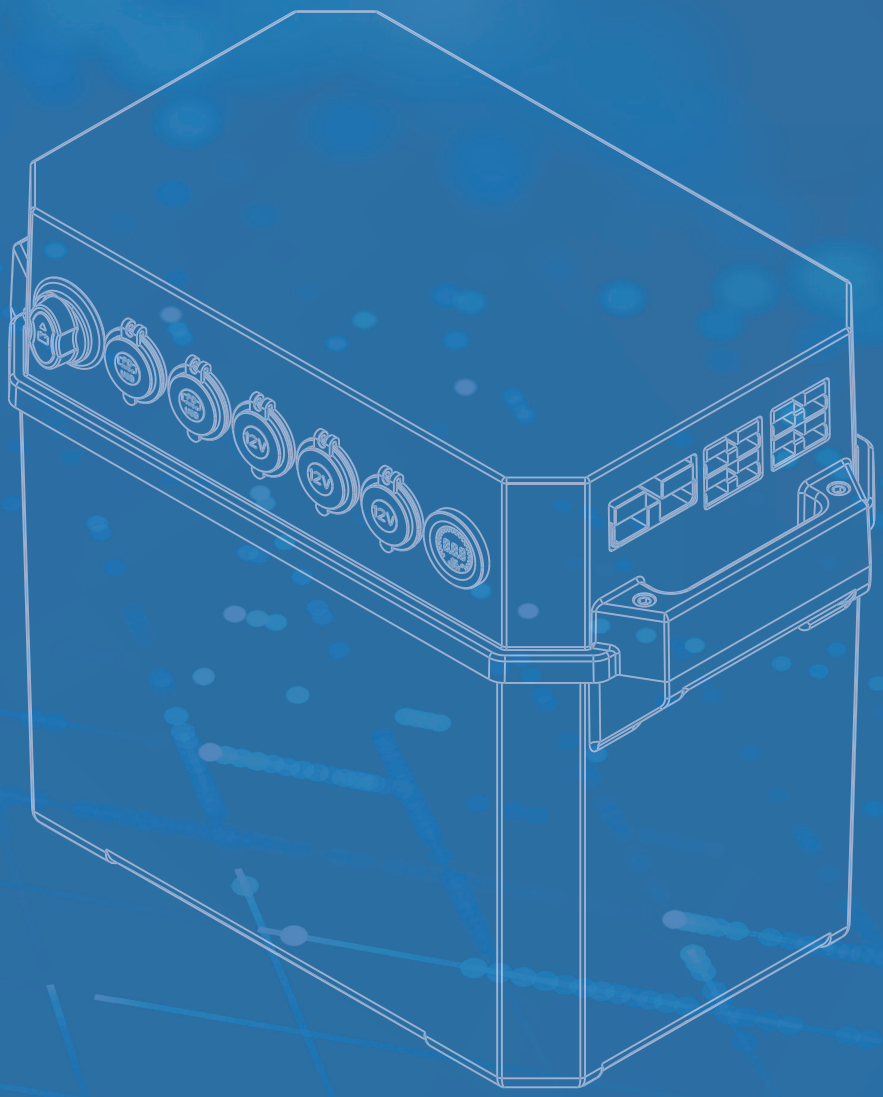


PLEASE READ THIS MANUAL BEFORE USE

www.licitti.com

# CONTENTS

1.SPECIFICATIONS

2.SAFETY INFORMATION

3.ASSEMBLY GUIDE

4.FUNCTION GUIDE

5. FREQUENTLY ASKED QUESTIONS

# 1. SPECIFICATIONS

## General

Battery Type: LiFePO4, AGM, Gel, Lead-acid
Dimensions: L420 x W240 x H340mm
Max Battery Dimension: L330 x W180 x H240mm
Weight: 3.80 Kg
Max Battery Weight: 35.0 Kg

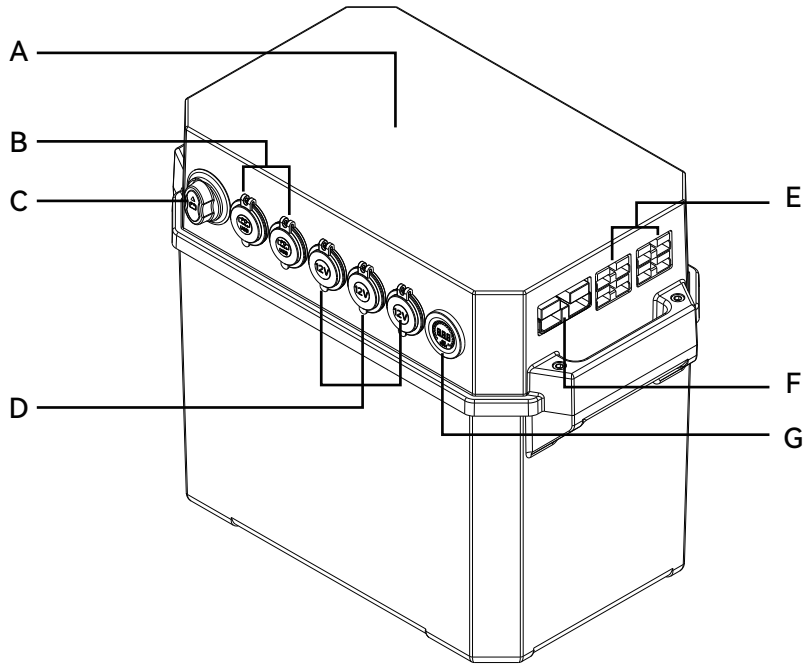


A - WIRELESS CHARGING(OUTPUT MAX 15W)

B - USB3.0 & PD

C - MAIN SWITCH

D - 12V CIG SOCKET

E - 50A DC INPUT/OUTPUT

F - 175A DC INPUT/OUTPUT

G - COLOR VOLTMETER

# 2. SAFETY INFORMATION

- Please operate battery box on well-ventilated area.
- Please avoid falling off.
- Never connect positive terminal of Anderson plugs with negative terminal on the Battery Box.
- Do not let any metal objects fall into the Battery Box. This could cause a short circuit, and poses a risk to user.
- Please make sure all screws on the top of the Battery Box are tight, when using it.
- Please make sure the Battery Box hold tightly, when it's on the vehicle.Do not allow children to operate the Battery Box.
- Keep away from fire.
- Do not get wet of all ports or plugs. If it accidentally get wet, please turn off Battery
- Box main power switch, and dry the box ASAP.
- Only use the Battery Box between the temperatures of -10℃ to +60℃ (-14℉ to +160℉).
- Only work with 12V battery.

# 3. ASSEMBLY GUIDE

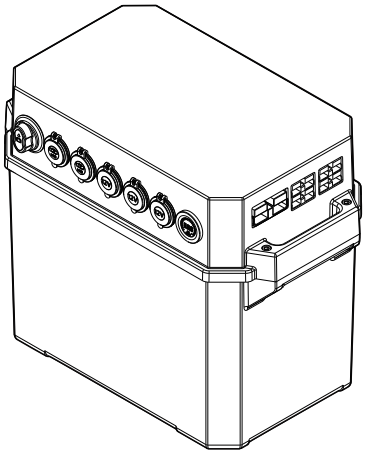

## ASSE MBLY GUIDE

1

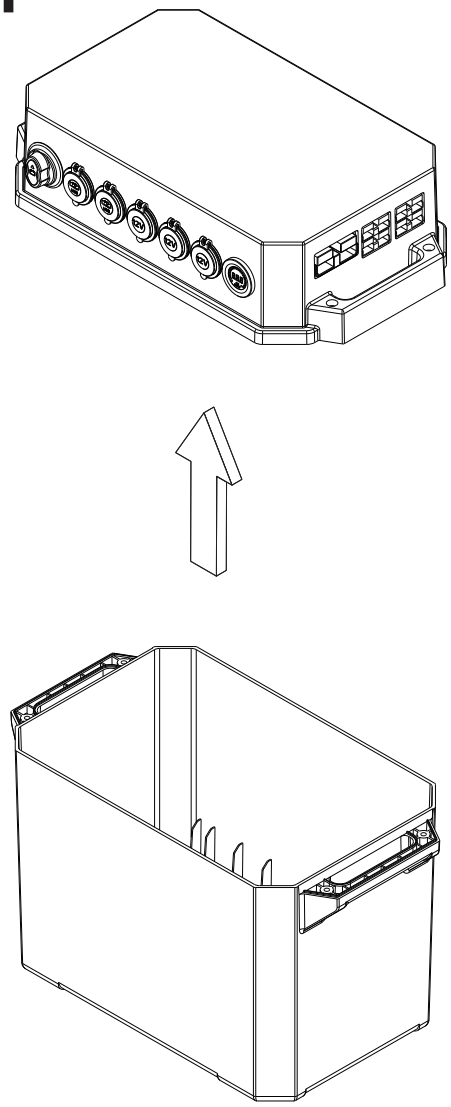

2

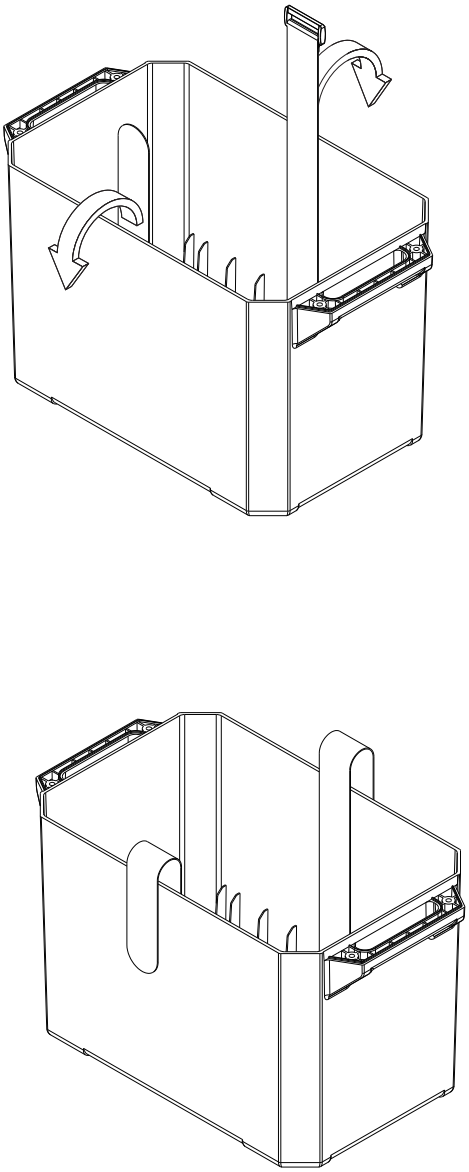

## 3

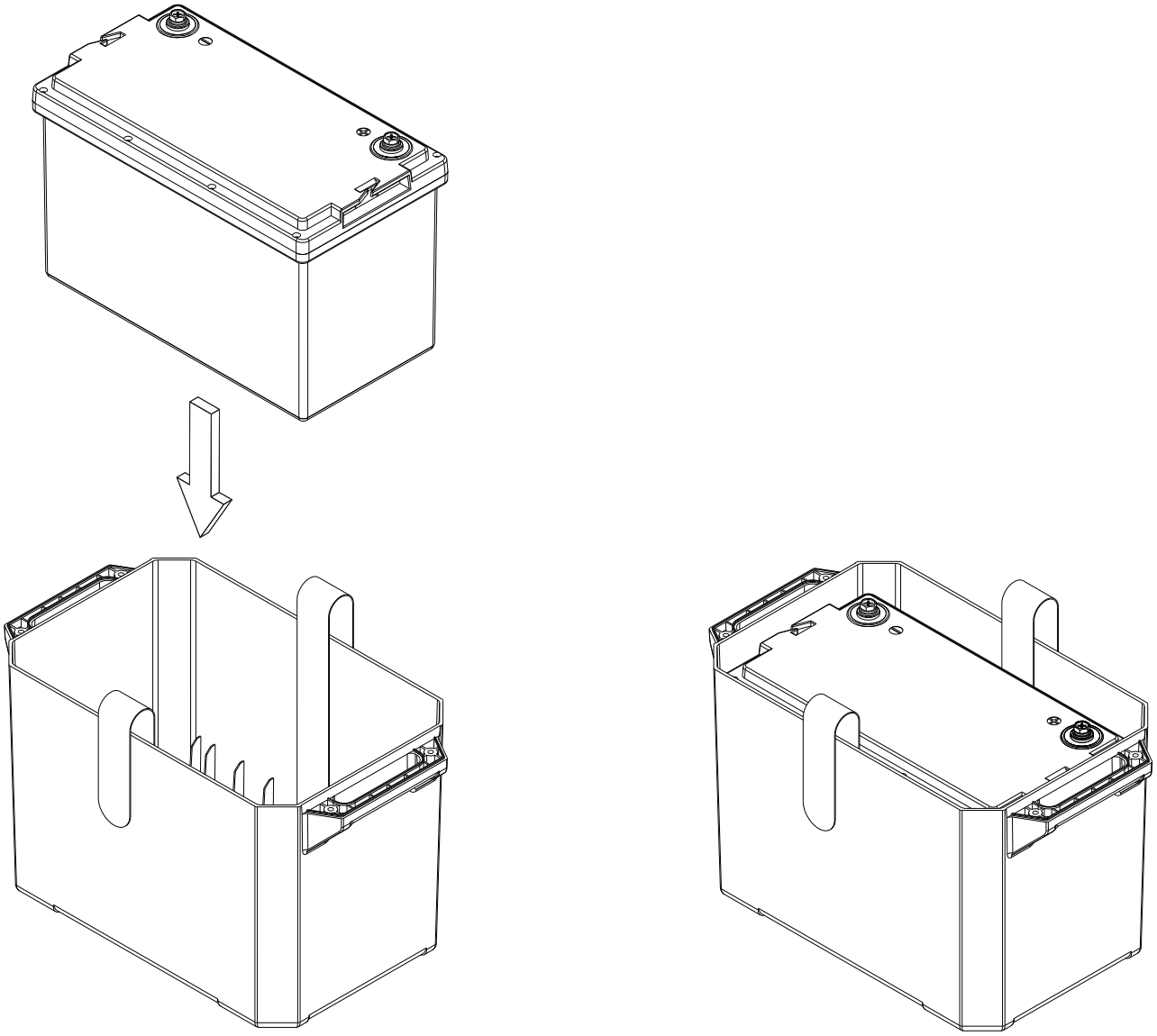

## 4

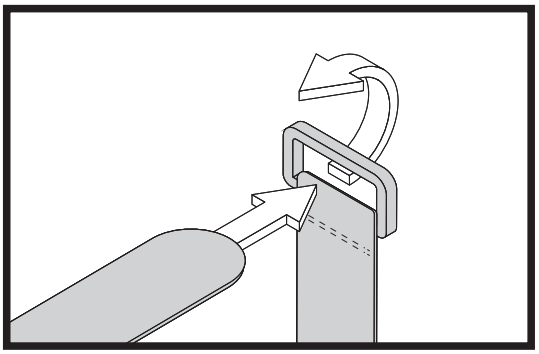

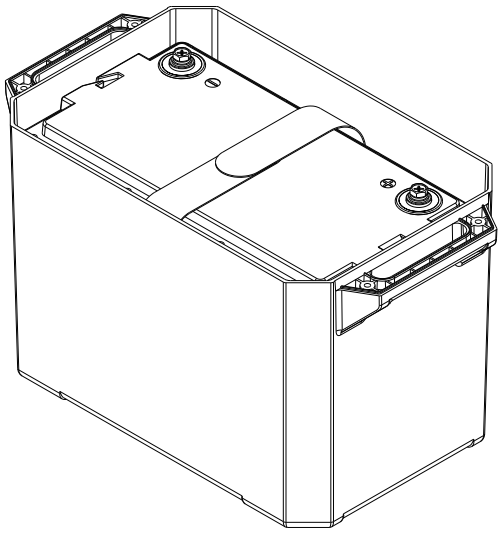

5

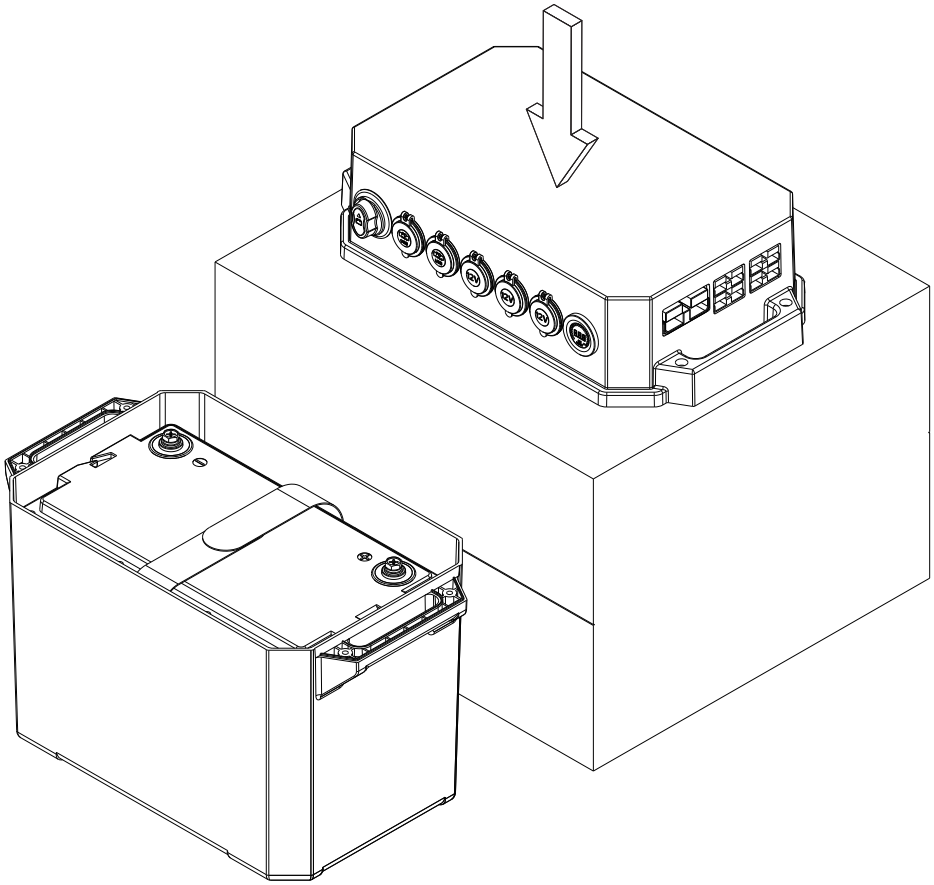

6

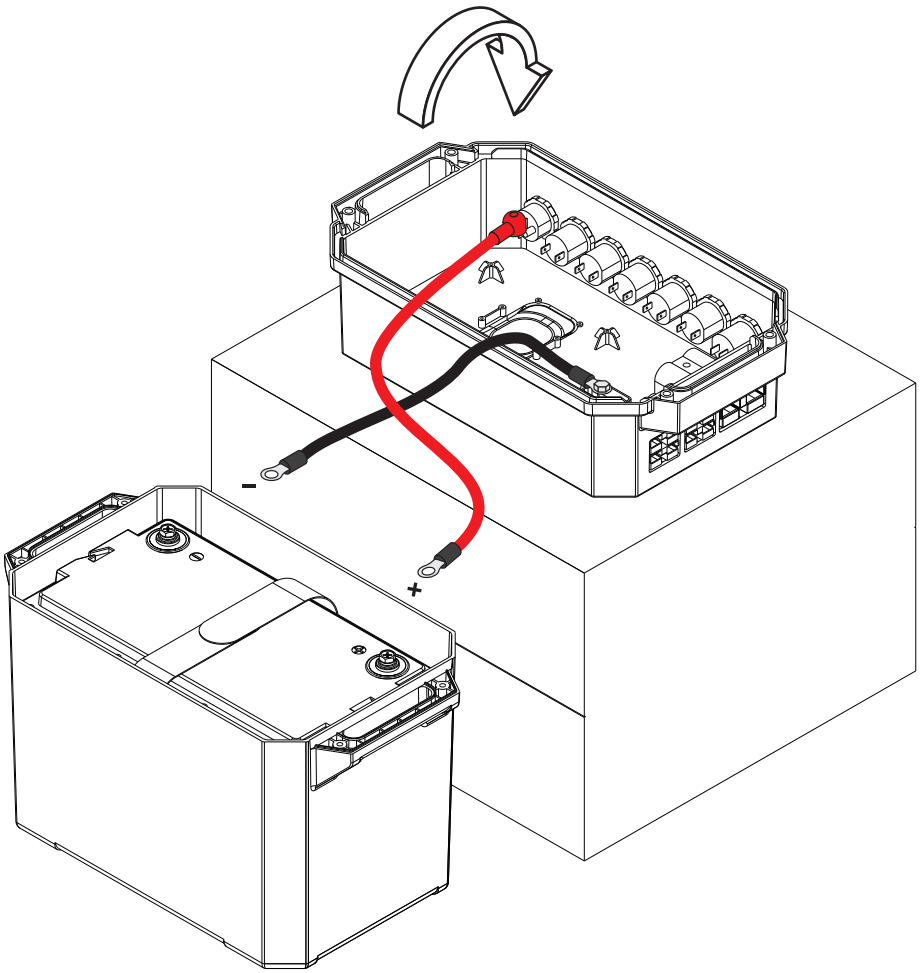

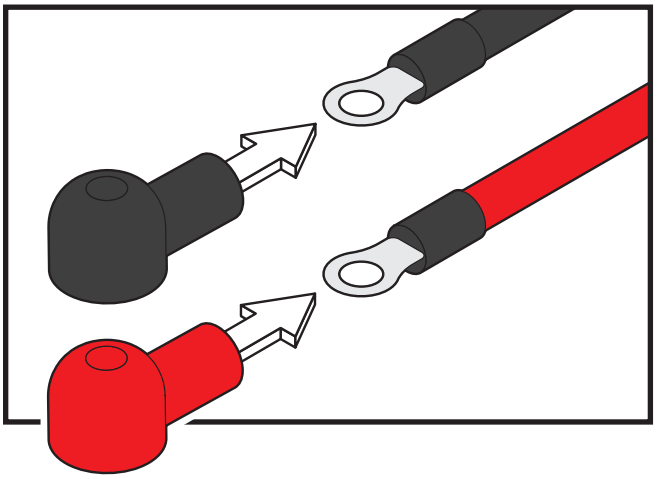

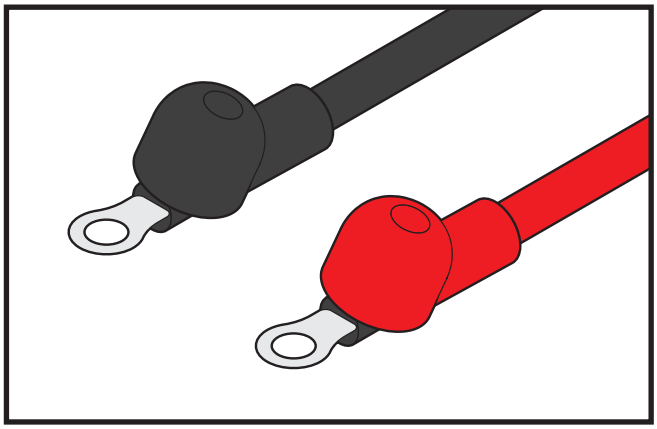

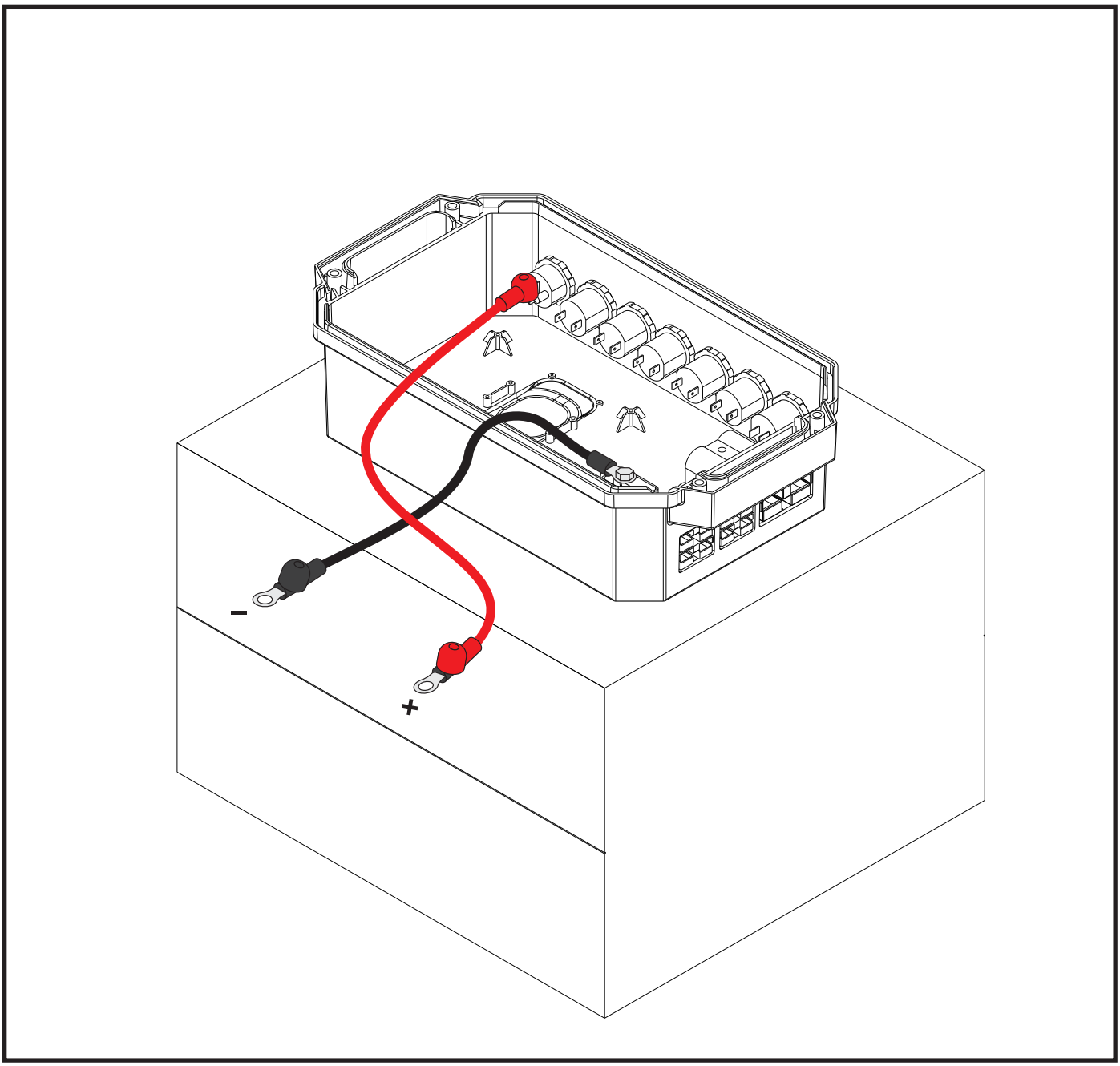

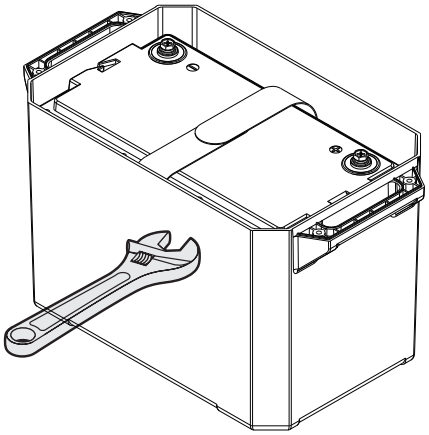

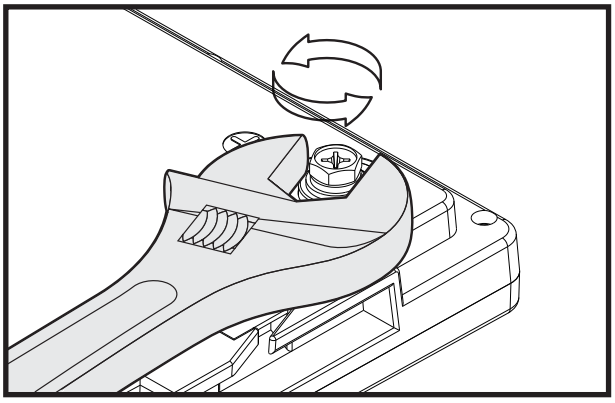

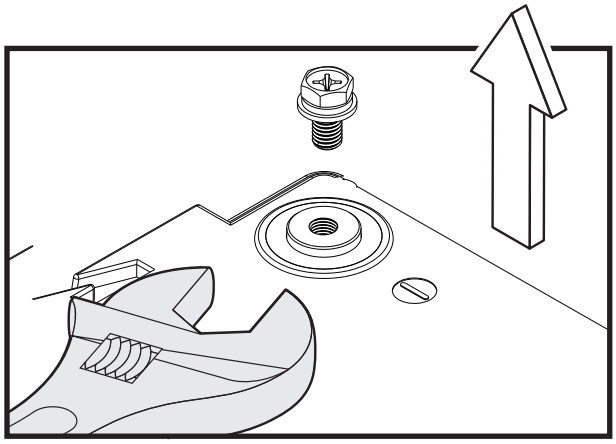

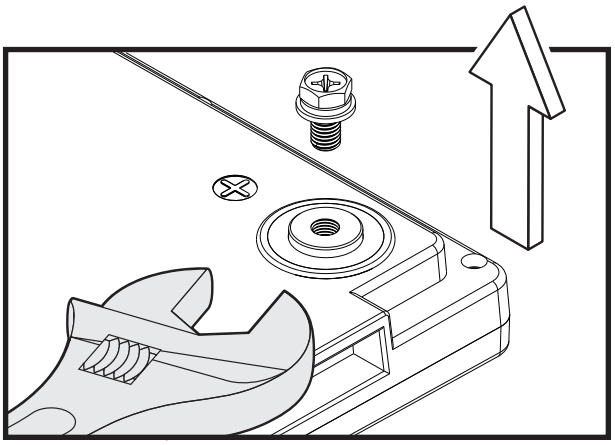

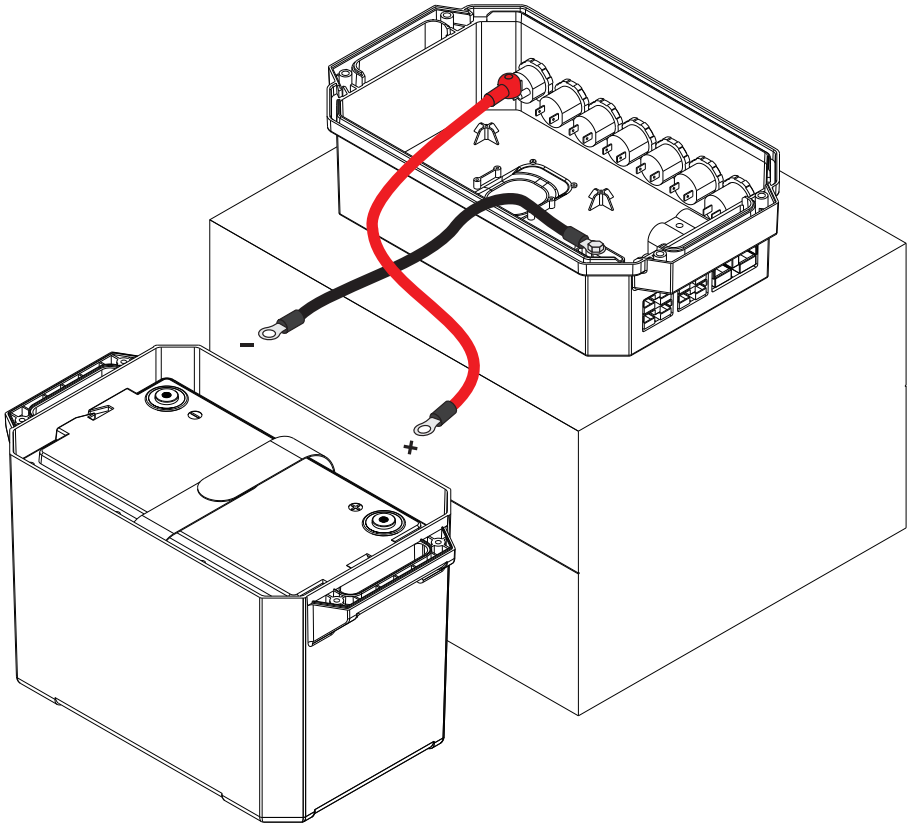

9

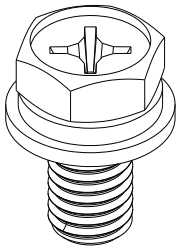

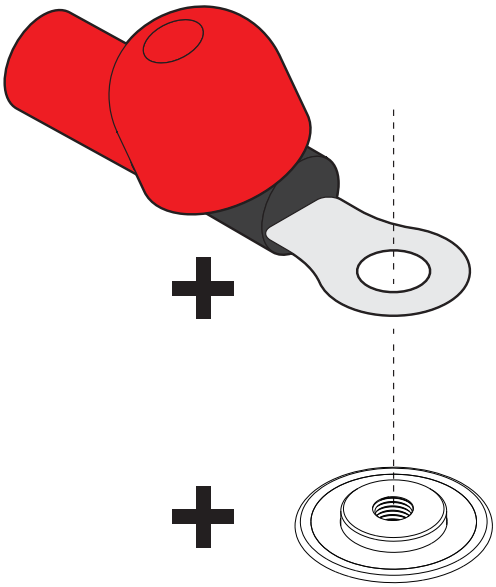


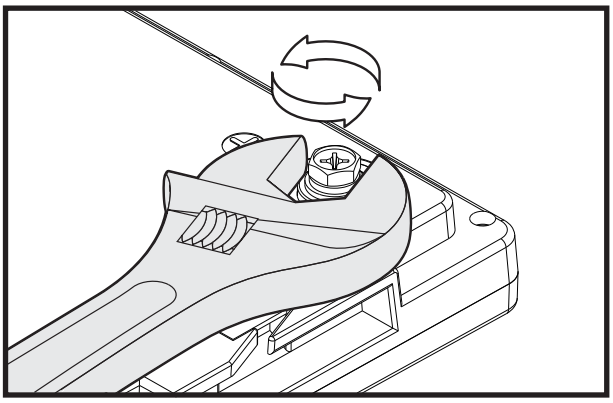

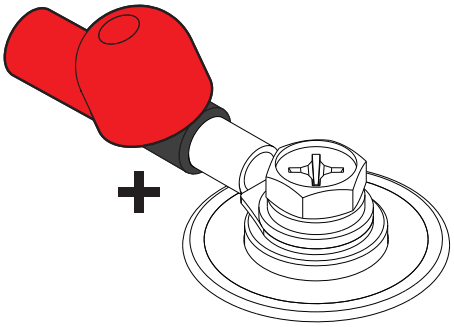


10

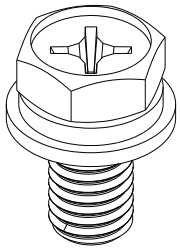

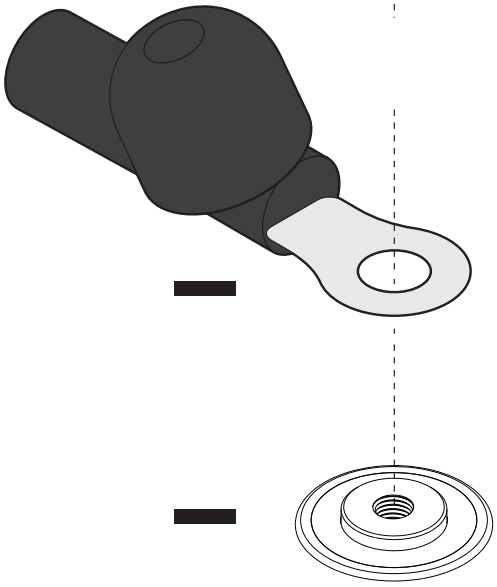


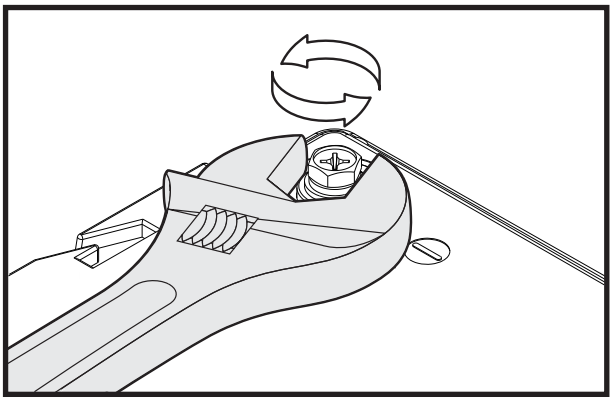

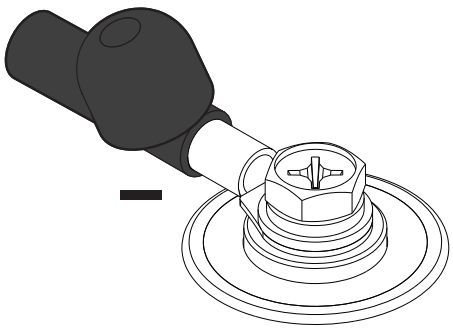

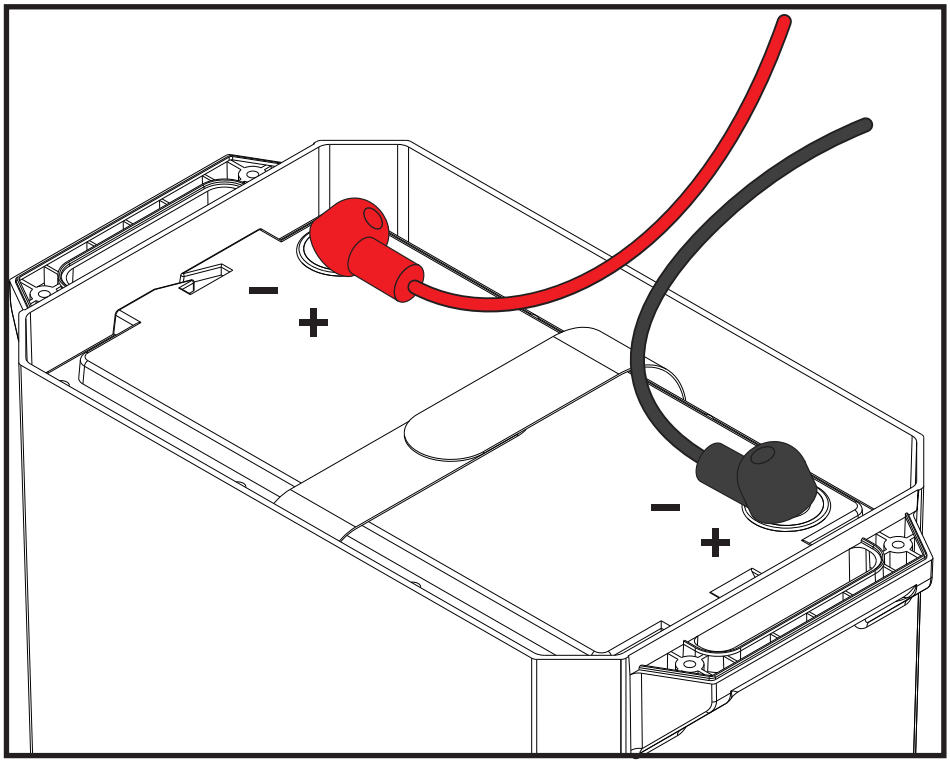


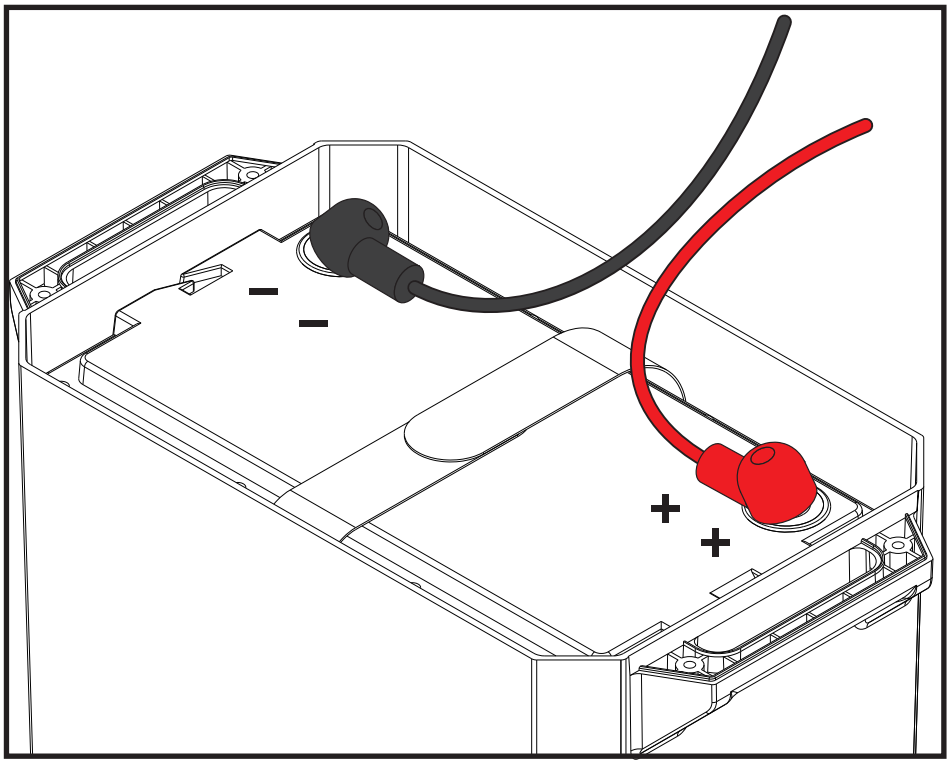

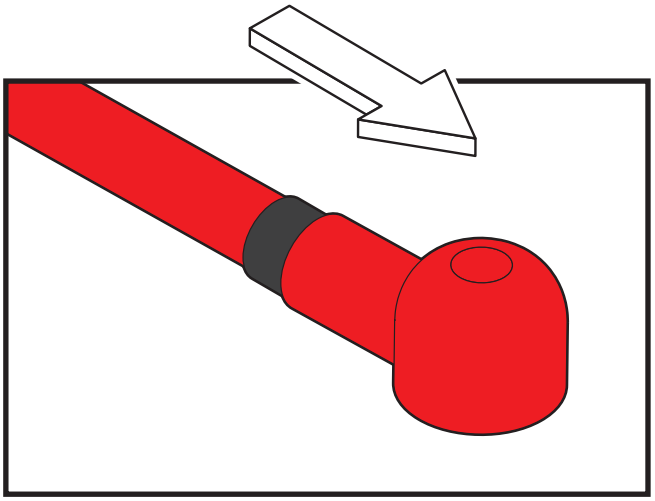

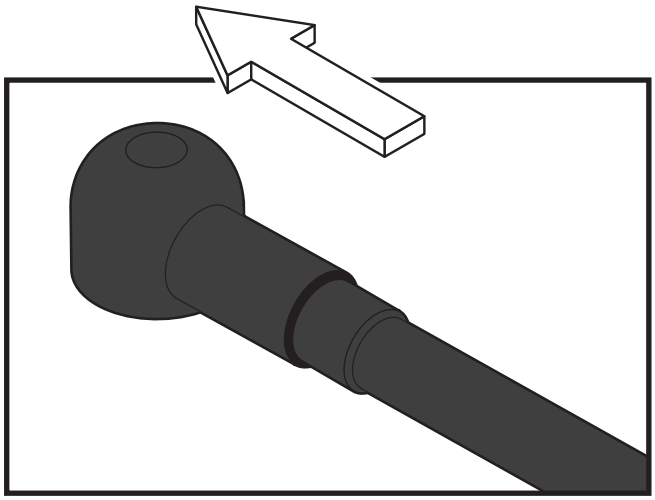

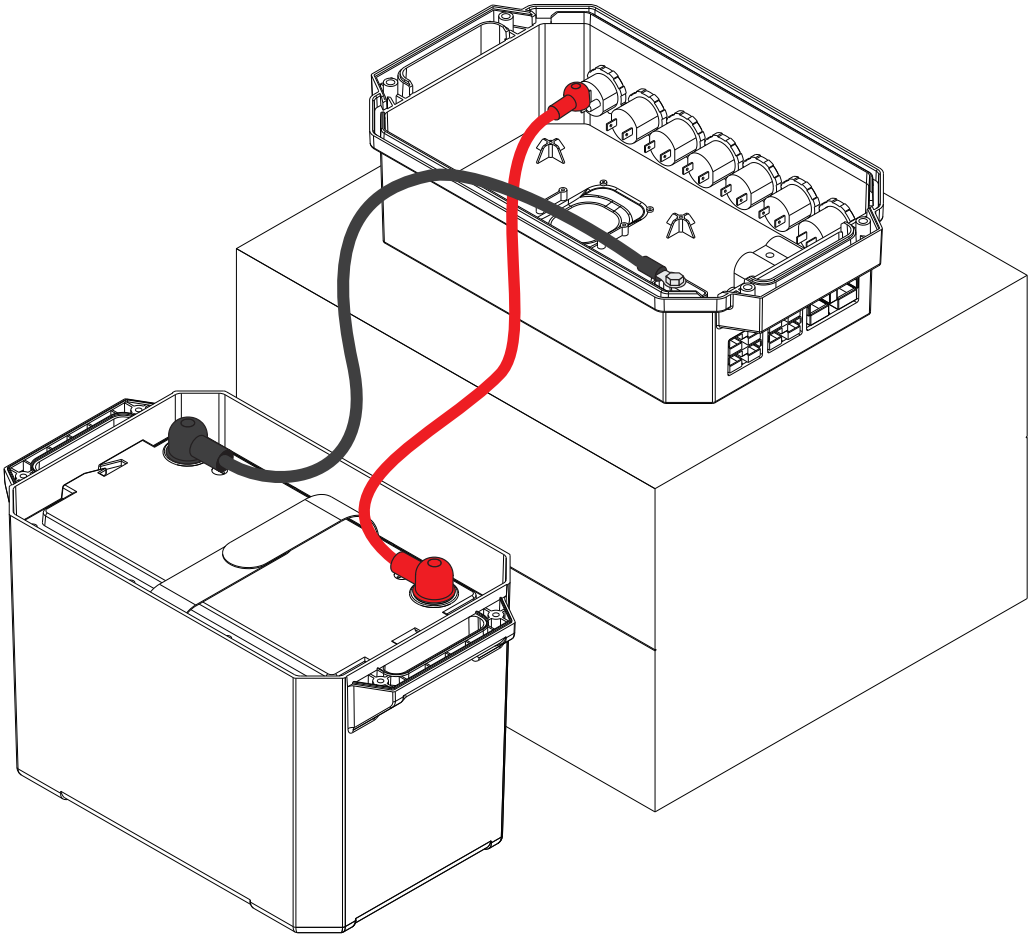

12

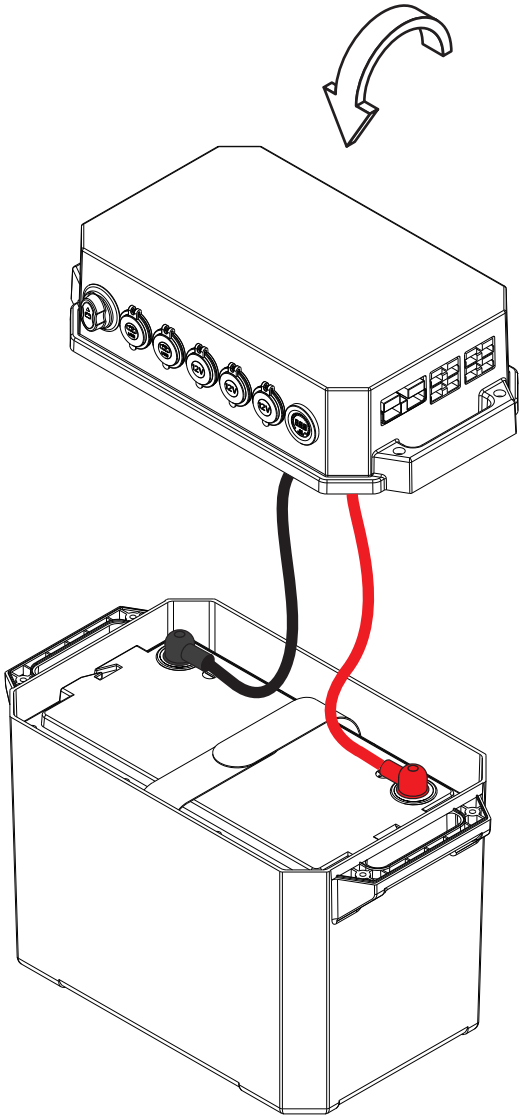

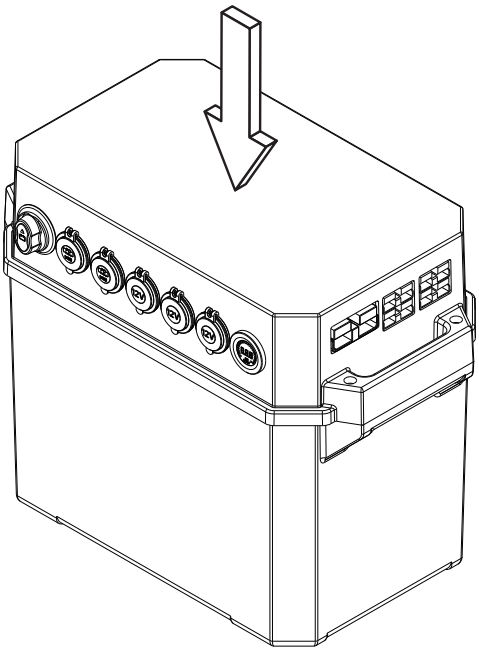

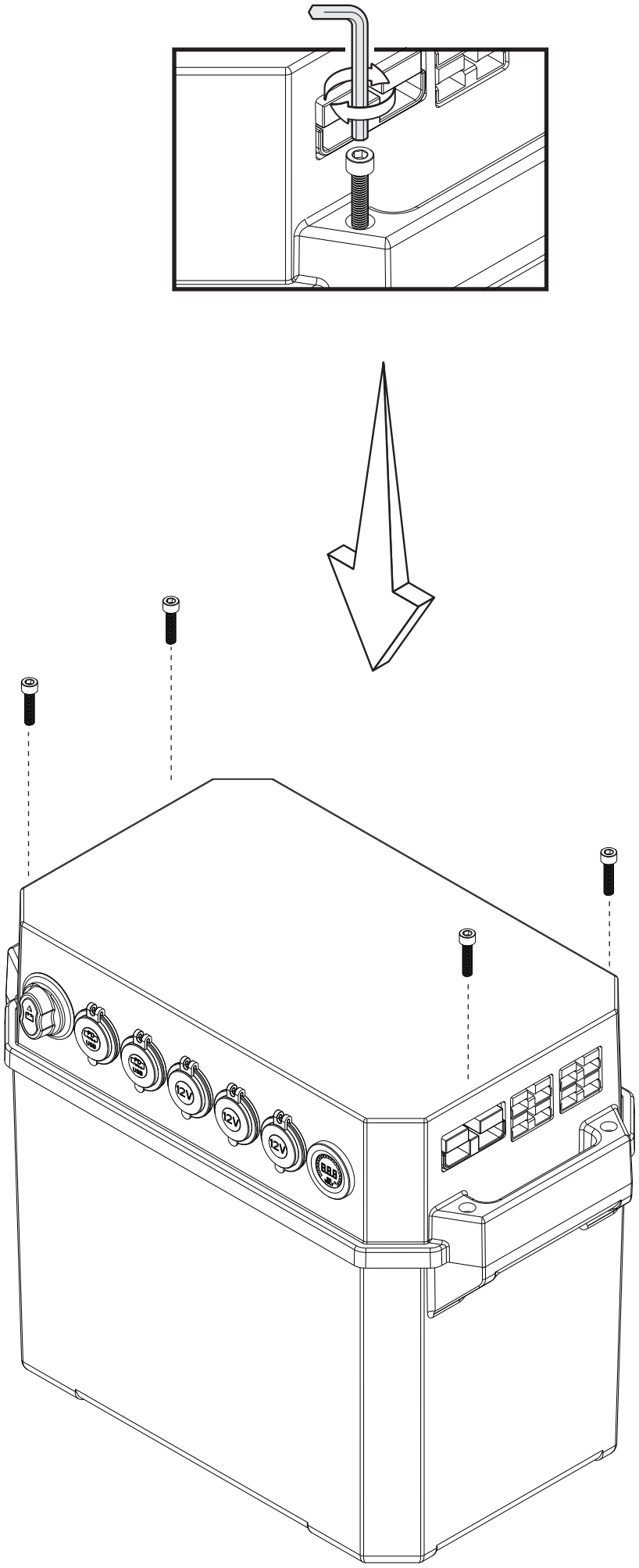
12V
12V
12V

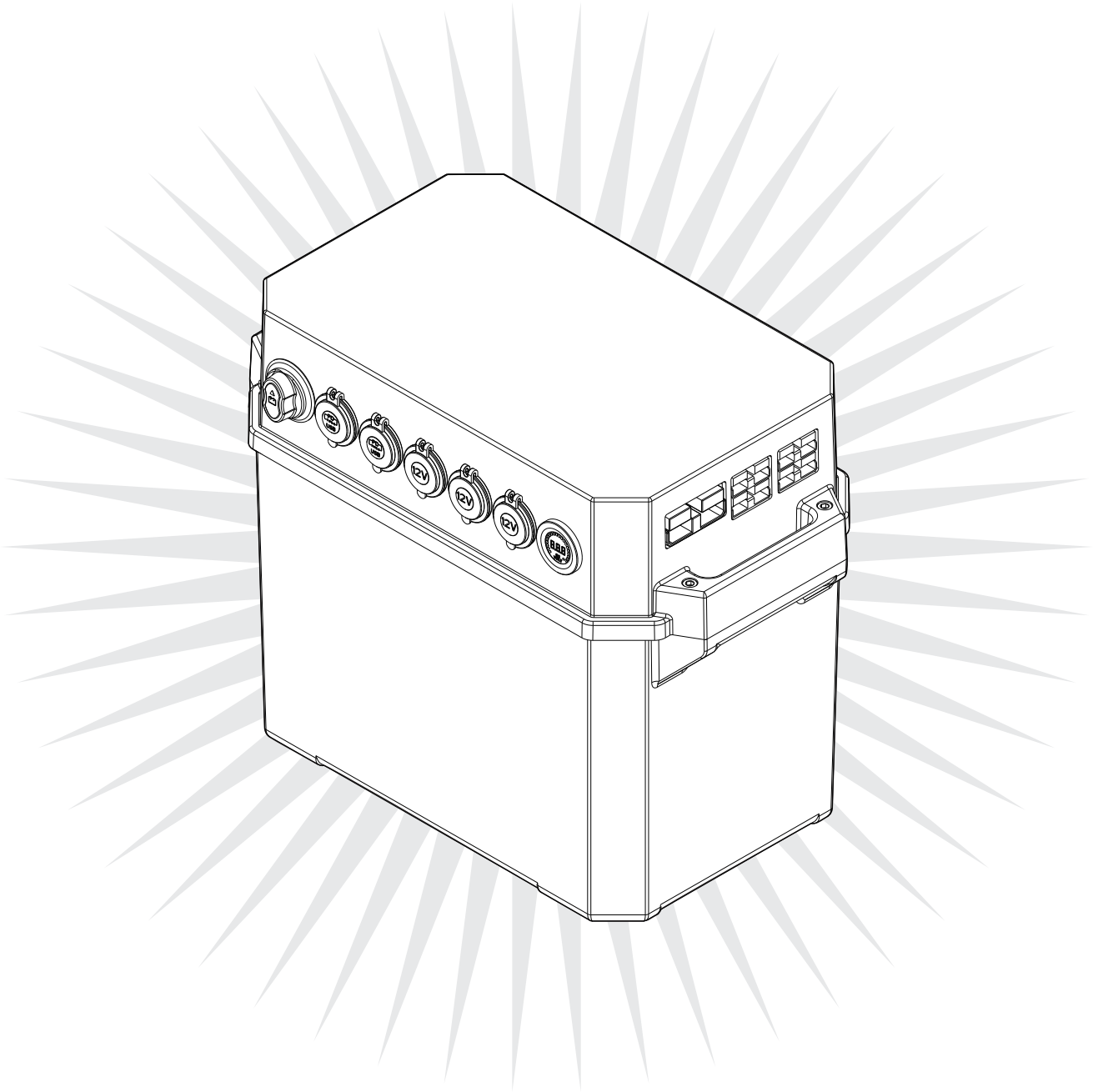
12V
USB
USB
12V
12V
12V
USB

# 4.FUNCTION GUIDE

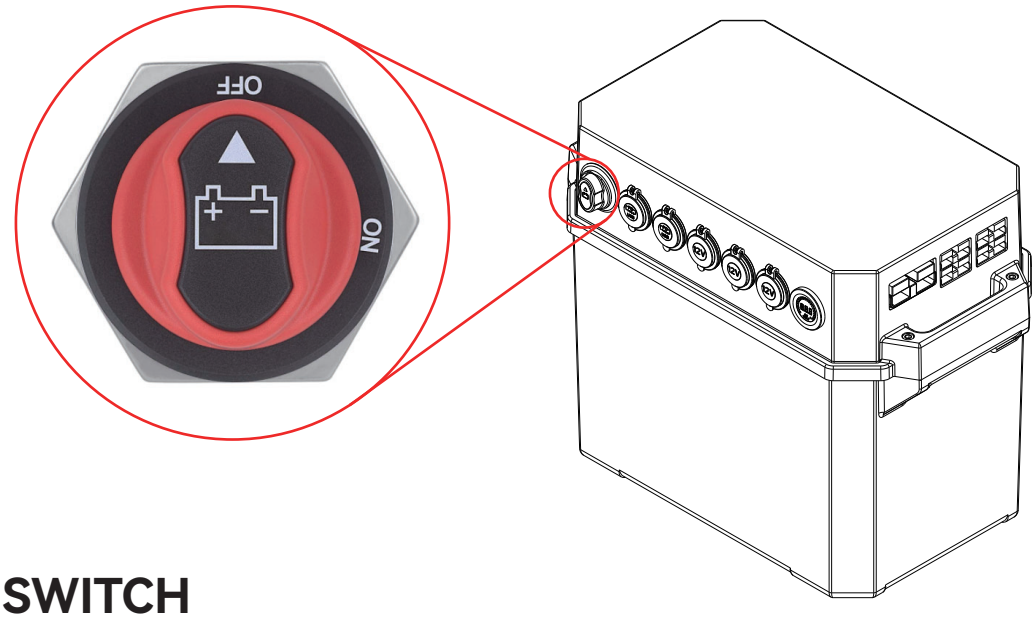


## MAIN SWITCH

Main switch connects or disconnects the battery to all inputs and outputs. Main switch must remain on while in use. Main switch must be off, when not in use, or  longt-term storage.

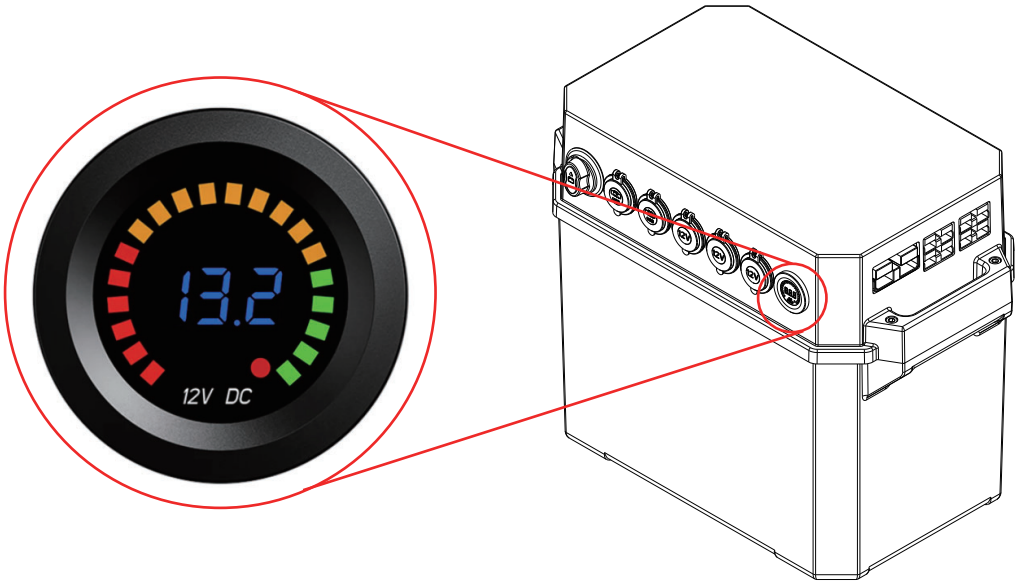


## VOLTMETER

13.2V is full grid, 13.1-13.0 is one grid less (reduced by 0.2V), then decreases by 0.1V by one grid less, until the last grid is lit at 11.2V, and no grid is lit at 11.1V.

# 12V POWER OPTIONS

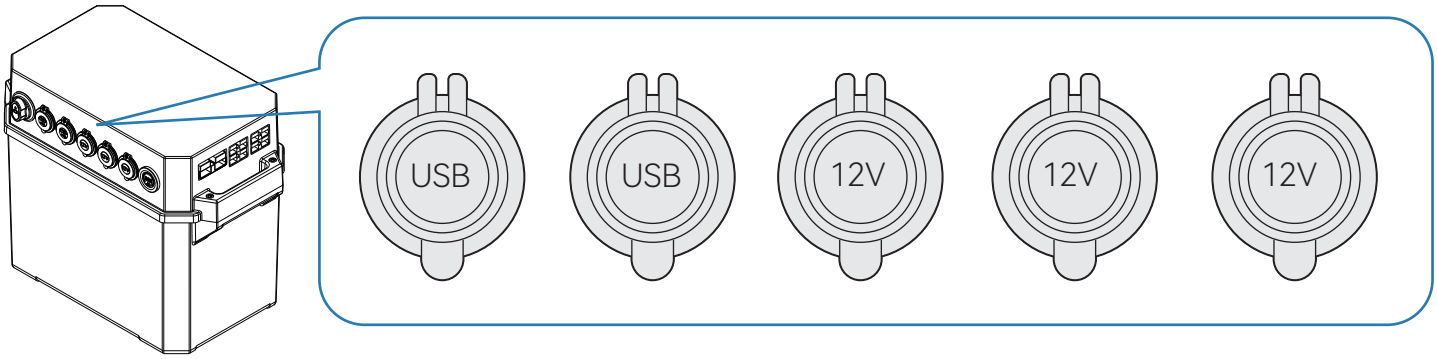


2 x USB3.0 & PD

3 x 12V CIG SOCKET

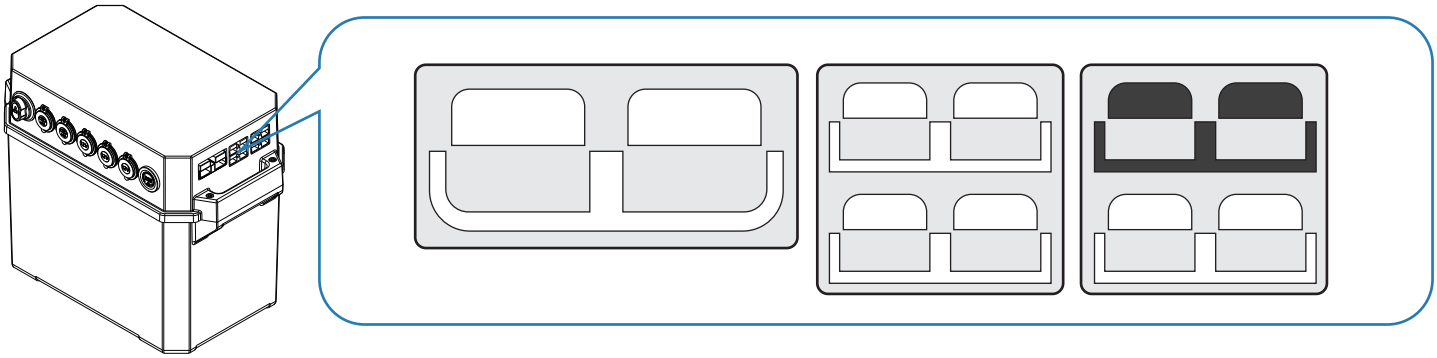

175A JUMP STARTER SOCKET
STARTER 175A
ENCHUFE DE ARRANQUE DE SALTO 175A

50A POWER SOCKET
PRISE DE COURANT 50A
ENCHUFE DE 50A

---

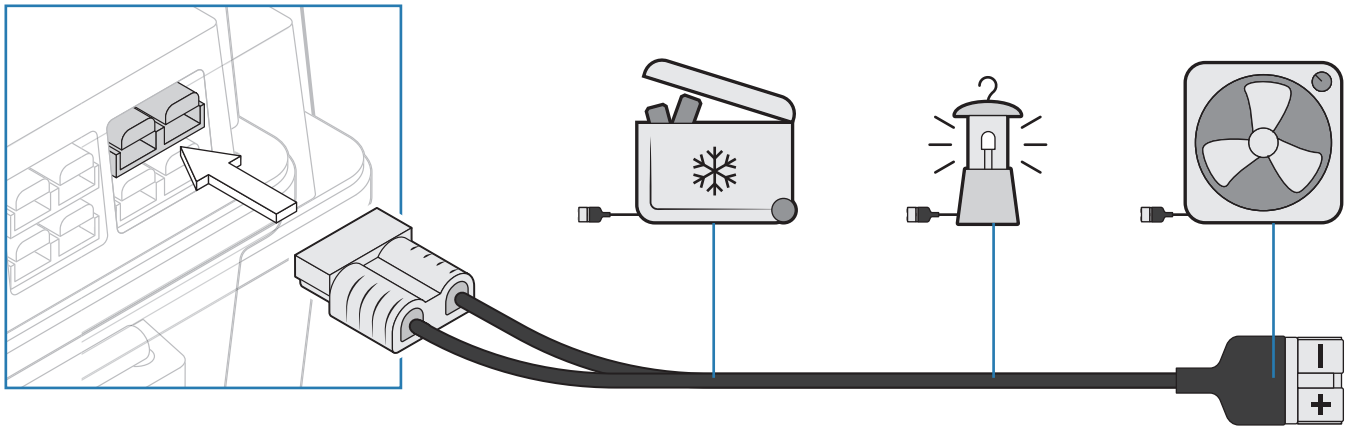

# 5.FREQUENTLY ASKED QUESTIONS

**Q. What types of batteries can I charge with this battery box?**

A. All 12v rechargeable deep cycle batteries including AGM, Wet, Calcium, Gel and lithium.

**Q. Can I charge the battery and power a device at the same time?**

A. Yes.

**Q. Does the Battery Main Switch need to be on at all times?**

A. Yes, if the battery is being either charged or discharged the Battery Main Switch must be in the on position.

**Q. How can I charge the battery box?**

A. The battery box can be charged from any battery charger or solar panels via the Anderson-style plug outlets. You can also use the optional Voltage Sensitive Relay (VSR) which is sold separately.

**Q. Do I need to use a regulator if charging via solar panels?**

A. Yes, you will need to use a regulator if you are charging the battery with solar panels.

**Q. Why have my devices suddenly stopped receiving power?**

A. The circuit breaker may have been tripped due to a connected device drawing too much power. Disconnect all devices and wait for the circuit breaker to reset. If the problem persists, check the fuses and replace any that are blown.

**Q. Can I use this battery box to jump start my car?**

A. Yes, using an Anderson-style jump-starter kit in the 175A Anderson-style plug outlet.

FCC WARNING

This device complies with part 15 of the FCC Rules. Operation is subject to the following two conditions: (1) this device may not cause harmful interference, and (2) this device must accept any interference received, including interference that may cause undesired operation.

Any changes or modifications not expressly approved by the party responsible for compliance could void the user's authority to operate the equipment.

NOTE: This equipment has been tested and found to comply with the limits for a Class B digital device, pursuant to Part 15 of the FCC Rules. These limits are designed to provide reasonable protection against harmful interference in a residential installation. This equipment generates, uses and can radiate radio frequency energy and, if not installed and used in accordance with the instructions, may cause harmful interference to radio communications.

However, there is no guarantee that interference will not occur in a particular installation. If this equipment does cause harmful interference to radio or television reception,

which can be determined by turning the equipment off and on, the user is encouraged to try to correct the interference by one or more of the following measures:

-- Reorient or relocate the receiving antenna.

-- Increase the separation between the equipment and receiver.

-- Connect the equipment into an outlet on a circuit different from that to which the receiver is connected.

-- Consult the dealer or an experienced radio/TV technician for help.

To maintain compliance with FCC' s RF Exposure guidelines, This equipment should be installed and operated with minimum 20cm distance between the radiator and your body: Use only the supplied antenna.

LICITTI

POWER THIS MOMENT