THANK YOU FOR PURCHASING X-FLY

MANUAL

To read imperatively before first use. 14 + years old. THIS IS NOT A TOY!

SCAN ME

Scan this QR code to access our “how to?” videos and visualize the instructions below. Et aussi - und auch:

MANUEL FRANCAIS - HANDBUCH IN DEUTSCH

X-Fly in a few specs:

- Ultra light weight less than 13 g

- Wingspan 380 mm

- Sturdy box-section structure of the body, elastic wings, tail, legs and head to protect from any impact.

- Custom developed micro coreless motor 1.6 Watt

- Patented wings flapping mechanism, fully symmetric with integrated micro speed reducer.

- Adjustable tail angle for slow or fast flights (indoor/outdoor).
- Sharp and immediate steering control by wing distortion (patented) for aerial stunts.

- Impressive gliding due to its very low ratio weight/wing area (3.7 g/dm²). Controllable during gliding.

- Floor takeoff and landing thanks to its legs.

- Exclusive swap battery system: replace the battery in seconds, with no need to plug in, for non-stop flying.

Electronic

- Exclusive custom developed sensors and algorithms for a full electronic piloting assistance: Automatic straight flight and stall protection.

- Evolutive platform: a connector allows external hardware modules to be plugged in (ie LED plugin or buzzer plugin and later more to come).

- The microprogram of the CPU can be updated wirelessly from the app when a new version comes.

- Full battery protection against short circuit, overcharge,

and complete discharge, for a longer life.

- Ultra fast charging time of the battery in 13 minutes.

Application “The Flying App”:

- Compatibility: Check compatibility with systems and devices on www.bionicbird.com.

- Range: The controllable distance of X-Fly is 150m.

- Protocol: Bluetooth 5 (Bluetooth Smart).

- Multiplayer system with Bluetooth connection, ability for multiple players in one place.

- Manage and update several devices stored in the app. Each one is recognized by its serial number, it can detect malfunctions and update device microprogram wirelessly.

- User interface: 1 intuitive mode (“Tilt”), 2 classical modes (“One Finger”, “Classic RC”) and 1 mode dedicated to the (optional) physical joystick (X-Play).

- Tilt: Tactile control of the acceleration, steer by tilting the phone, all with one hand.

- One Finger: Control the acceleration and steering with your index finger, while holding the phone with your other hand.

- Classic RC: Tactile control of acceleration and steering separated (require 2 hands)

- X-Play mode: Stick the X-Play on the screen and you’ll get the precision and feeling of a physical transmitter.
- Each mode is totally configurable to adapt to your needs for a comfortable use.

- All sensors piloting assistance are configurable.

- LED and buzzer optional modules are configurable.

- Spring back effect (“Cruise control”) on throttle can be activated or not.

- Battery level of the device and strength of the BT signal are displayed.

- Interactive sound and vibration.

Dimensions & performance:

X-Fly length: 20 cm
X-Fly wingspan: 38 cm
X-Fly weight: 12.2 g
X-Fly controls: Power (altitude) and steering
Onboard accumulator: LiPO 58 mAh, 20 C- 1100 mA
Autonomy of X-Fly in normal flight: 10 min
Charging time of the battery: 13 min
Range control of the X-Fly in flight: 150 m
Protocol: Bluetooth 5.2
Motor rotation speed (no load): 53,000 rpm
Motor rotation speed (full load): 35,000rpm
Wings flapping frequency max: 18 Hz
Wings flapping amplitude: 45°
Ratio weight/wing area: 3.7 g/dm²
Max wing thrust: 11 g

WARRANTY: This product is warranted against failures in material and workmanship under normal (except impacts and crashes) for six (6) months from the date of purchase (Keep your purchase receipt).

For any questions regarding this product, please contact our customer service by email at:

contact@bionicbird.com.

XTIM SAS: 77, Rue de Lyon 13015 Marseille FRANCE

website: www.bionicbird.com

PATENTS:

Patented by Edwin Van Ruymbeke - France 0855430 date 08/05/08 and 0901629 date 3/04/09 PCT FR2009/051560

X-Play physical joystick US patent pending

PARTS INCLUDED

1/ X-FLY STANDARD

1 complete X-Fly kit:

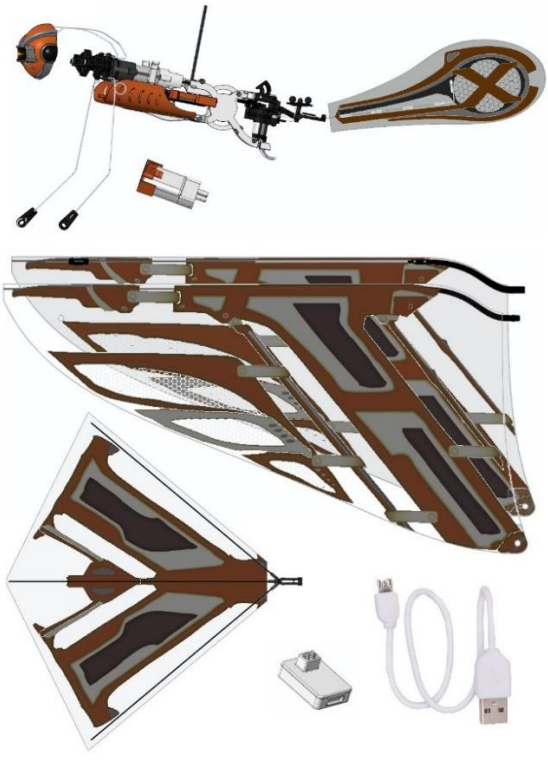

2/ X-FLY BUNDLE additional parts:

X-Fly Bundle includes the standard kit + X-Play + add-ons (a second battery and a LED module):

Some special BUNDLEs may also include an extra set of wings in camo (extra wings+tail+rudder in “camo”)

BATTERIES:

X-Fly (removable): 3.7 Volt 1 cell 55 mAh Li-Po included.

X-Fly Bundle: includes a second battery pack (identical)

ASSEMBLING YOUR X-FLY

The wings, the tail and rudder must be assembled to X-Fly's body. It is very simple if **you follow strictly the instructions below** but might be tricky if you don't. Please proceed with care as all parts are tiny. If you use reading glasses, please wear them :).

1/ TAIL

This requires more attention, please follow strictly this 3 steps process:

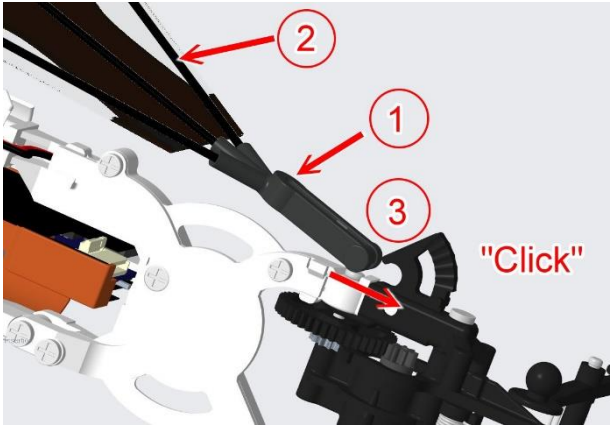

1 - Hold the tail firmly by its sturdy frame (1), present it in the position shown (with the exposed carbon rods (2) facing upwards), then push the cylindrical end (3) of the tail into the notch in the direction of the arrow until you feel a "click".

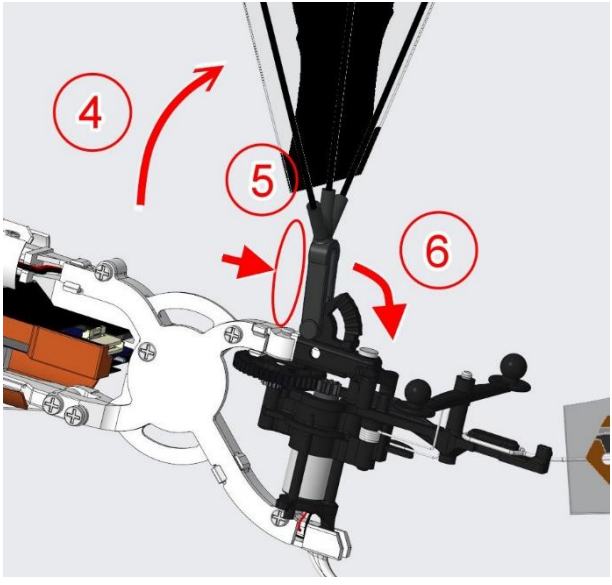

2 – Once the tail pin has been inserted into the notch, rotate the tail (4) to a vertical position, then **place your thumb at the very bottom** (5) to push it backwards (6) and rotate it into the final position.

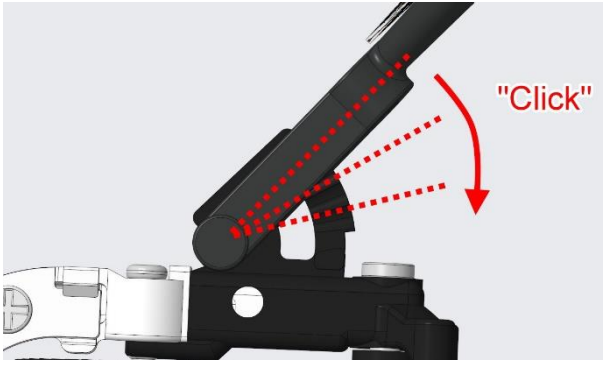

When you've finished, always check that everything is in place as shown. By turning the tail up or down, you should be able to change the tail setting and feel the different "clicks".

3/ WINGS

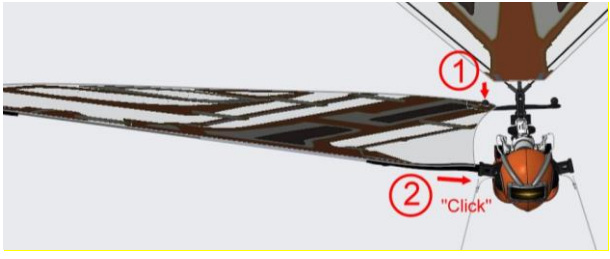

Select the right wing for the right side and the left wing for the left side (the wing structure must be under the wing fabric).

At the rear, clip the hole at the rear of the wing onto the

small sphere (1) of the steering mechanism.

Align the structure of the wing with the shoulder of the mechanism and insert it into the square hole (2). You should feel a click when the wing is correctly inserted.

WARNING: To fit or remove the wings, hold X-Fly by the shoulder (red circle) **(Not by its body!)** as indicated by the arrows. And always hold the wings by their sturdy base.

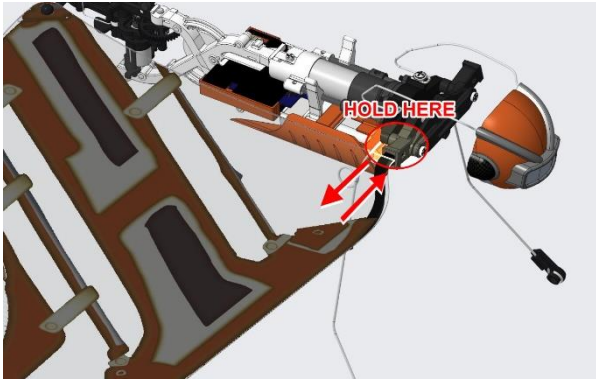

4/ RUDDER

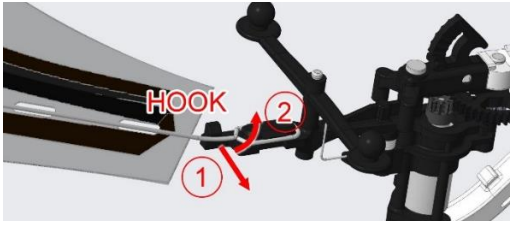

To remove the rudder, push the steel wire to the right (1) to release it from the plastic hook, then lift it out (2).

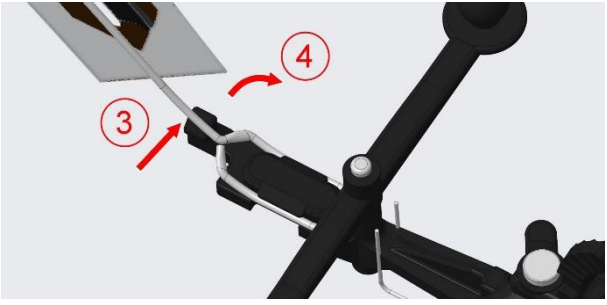

Once the rudder is no longer held by the plastic hook, open the "o" shape by pulling the steel wire to the left (3), then 4- lift it up to extract it from the oval plastic part.

Reverse the process to replace it.

5/ BATTERY

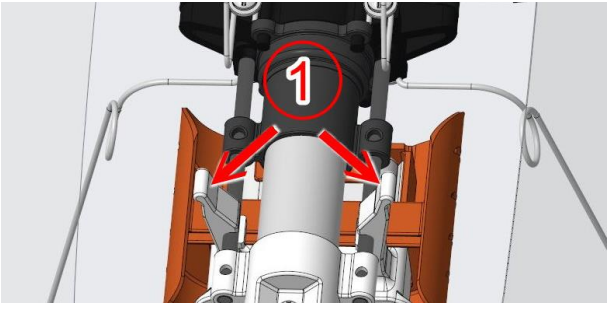

Simultaneously pull apart the 2 white hooks (1) on the motor to release the battery compartment, which will

pivot downwards.

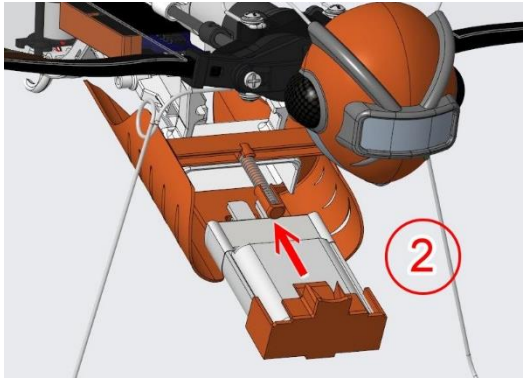

Slide the battery into the compartment in the position shown (2).

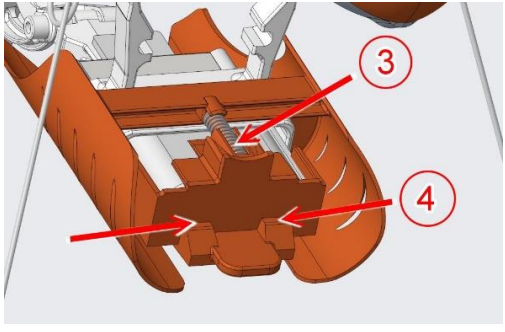

Until the spring (3) is fully compressed and the catches (4) are locked.

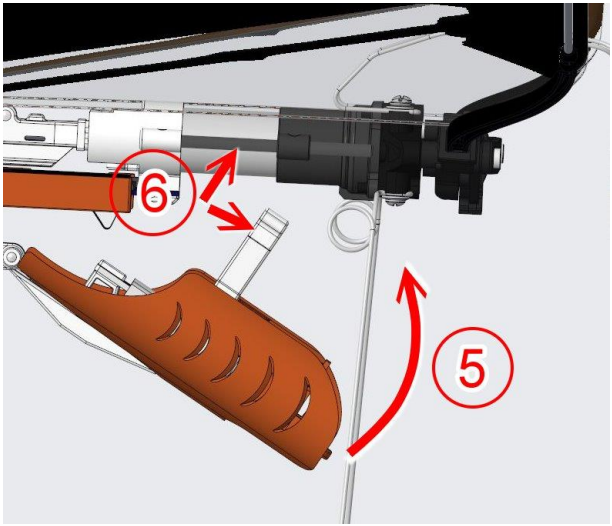

Close the battery compartment by pivoting it upwards (5), then in pressing down until the two hooks (6) engage securely on the carbon rods on both sides.

6/ ASSEMBLING X-PLAY (OPTIONNAL JOYSTICK)

The X-Play controller is optional, included in the bundles or can be purchased separately. It turns your smartphone into a real radio remote control.

Simply attach it to your smartphone as shown below, at the app prompt, after choosing X-Play mode.

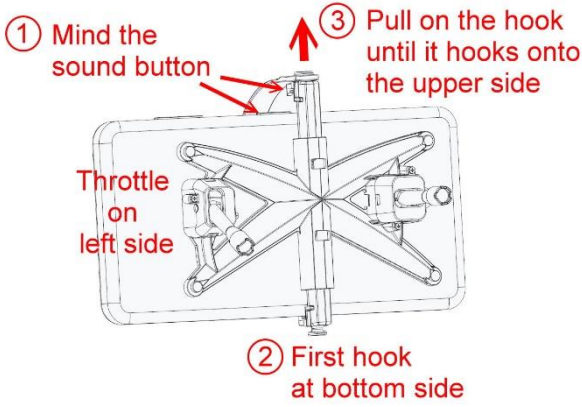

Apply X-Play to the smartphone screen as shown in the drawing: smartphone buttons up, throttle lever to the left.

Place X-Play roughly in the middle of the screen **but shift it to the left to avoid the volume button (1) if necessary.**

Apply the first hook (the one without the rubber band) to the bottom edge (2).

Pull on the second hook until it snaps onto the top edge (3).

Once in place, adjust position if necessary.

Elastic locking:

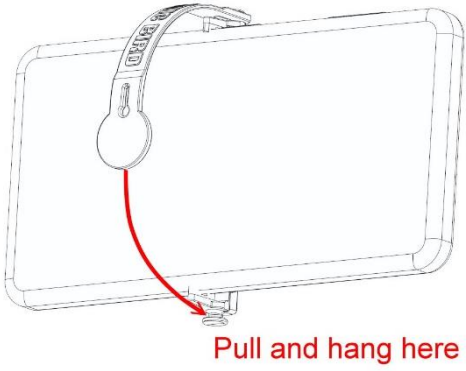

At the back, pull on the elastic and hook it to the bottom hook.

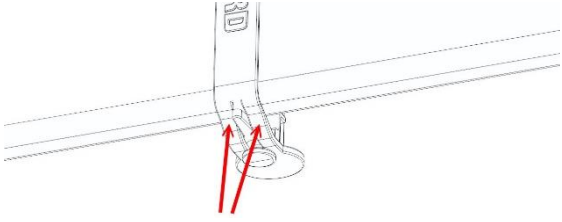

Make sure the 2 strands of the rubber band fit snugly around the hook.

7/ ASSEMBLING OPTIONAL MODULES

Optional electronic modules can be added to the main X-Fly board via the ribbon connector. These modules must be fixed in the X-Fly head and connected to its board by the ribbon cable supplied. **They can be stacked if 2**

modules are used. Here are the different scenarios:

LED module only:

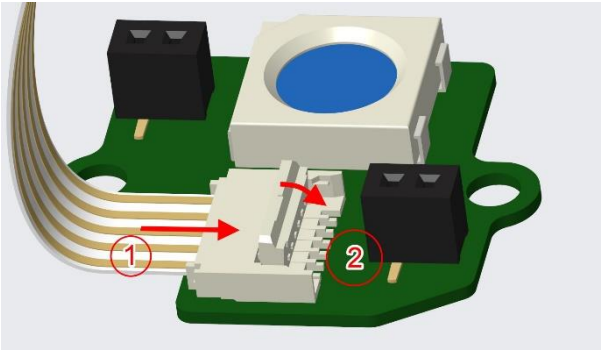

First connect the ribbon cable supplied to the module by pushing it all the way into the connector (1) and then by locking the connector (2).

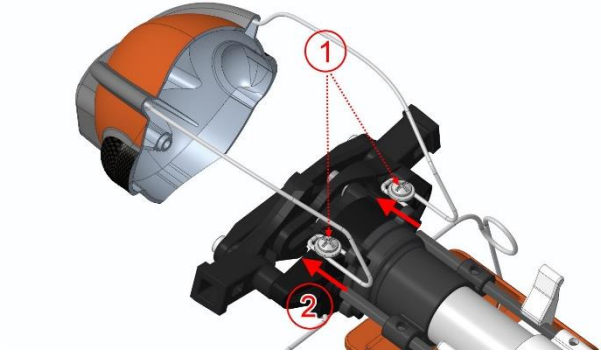

Remove the X-Fly head by partially loosening the 2 screws (1) and then release the 2 hooks by pushing them forward (2).

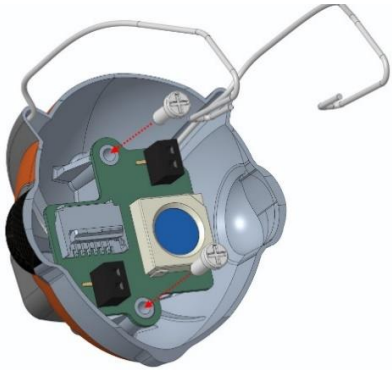

Once the head has been dismantled, the module (with its ribbon) can be screwed into it, positioning it exactly as shown above.

Then reassemble the head to the X-Fly, tightening the 2 screws firmly (see above).

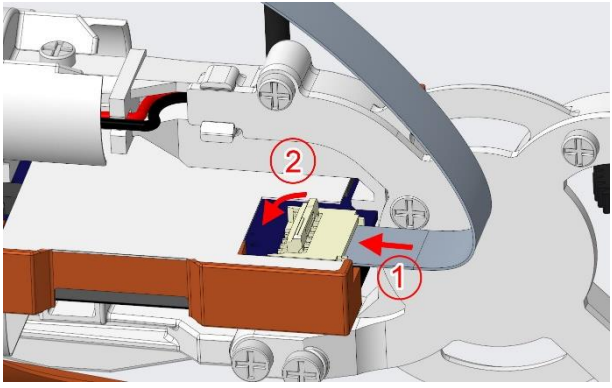

Finally, insert the other end of the ribbon into the connector on the X-Fly board (1) and lock it (2).

The LED module is now ready to operate and can be configured using the 'module' interface at the bottom of the 'settings' page for the chosen flight mode.

BUZZER module only:

In the same way, first connect the BUZZER module ribbon to it, then remove the X-Fly head as described above.

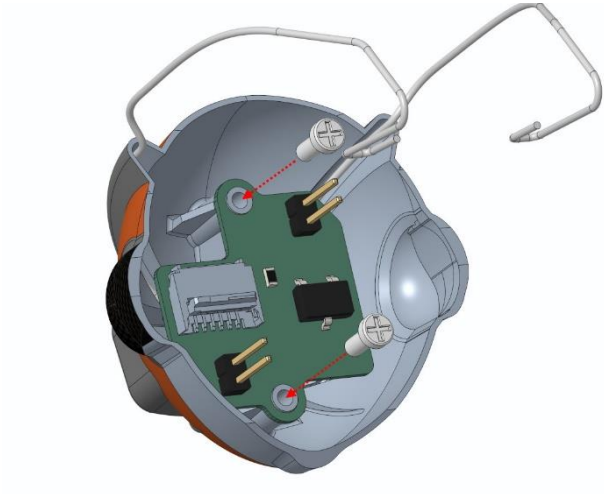

Screw the BUZZER module (with its ribbon) into the head in exactly the position shown above.

Reassemble the head to the X-Fly, tightening the 2 screws firmly.

Finally, connect the other end of the ribbon cable to the X-Fly board as shown above.

The BUZZER module is now ready to operate and can be configured using the 'module' interface at the bottom of the 'settings' page for the chosen flight mode.

LED module + BUZZER module:

If you are using the 2 modules simultaneously, first screw the BUZZER module **without the ribbon cable** into the head, then plug the LED module **with its ribbon**

cable into the head**.**

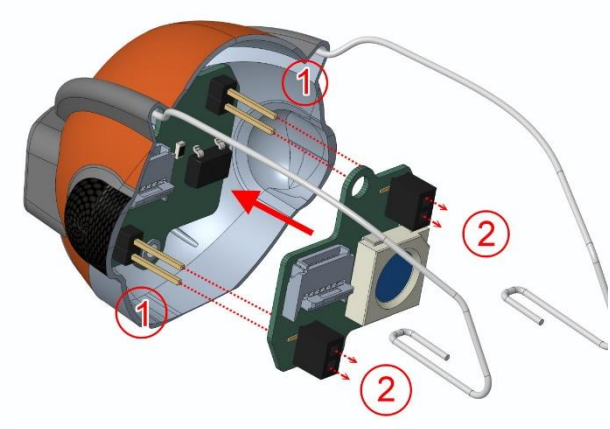

Align the 2 male pins (1) of each buzzer module connector with the holes in the female connectors (2) on the LED module in the position shown above.

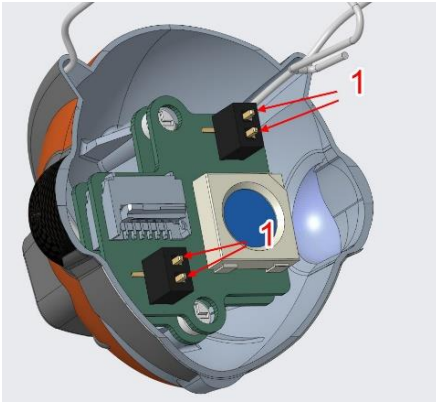

Push the LED module in until the pins pass through the female connectors (1).

NB: There is no need to screw down the LED module, which will be held in place by the connectors themselves.

Modules control

Modules are controlled on the app from the chosen flight interface, and on the associated 'Settings' page.

PARTS REPLACEMENT

Please refer to the “assembling your X-Fly” section.

Most spare parts are available for purchase on our website at www.bionicbird.com. In the "help" section you'll also find video tutorials, manuals, and how to contact us if you have a particular need.

INSTRUCTIONS OF USE

MANUFACTURER NOTES:

* Never try to move the wings up/down manually!

* This product was tested for a lifespan of hundreds of cycles in flight; however, it remains a high technology product that should be handled with care when not flying. Avoid seizing it by the wings or tail, place it carefully and gently on the charging slot, proceed gently also when replacing wings.

INSTALLING THE APP ON YOUR SMARTPHONE

Visit the app store using your smartphone and search for “Bionic Bird”. Then, install “The Flying App” on your device. Allow all the accesses the app requires, especially the Bluetooth control, but also localization and any other as they are all required to be able to function properly.
NB: For optimal and safe use, disable your Wi-Fi and call reception, and adjust your power saving options to restrict your phone from sleeping to ensure The Flying App isn’t interrupted during your flight!
The language used by the app is automatically adjusted to the language of your OS. French and English are basically included, but others may also be available.

CHARGING THE BATTERY ON THE USB CHARGE DEVICE

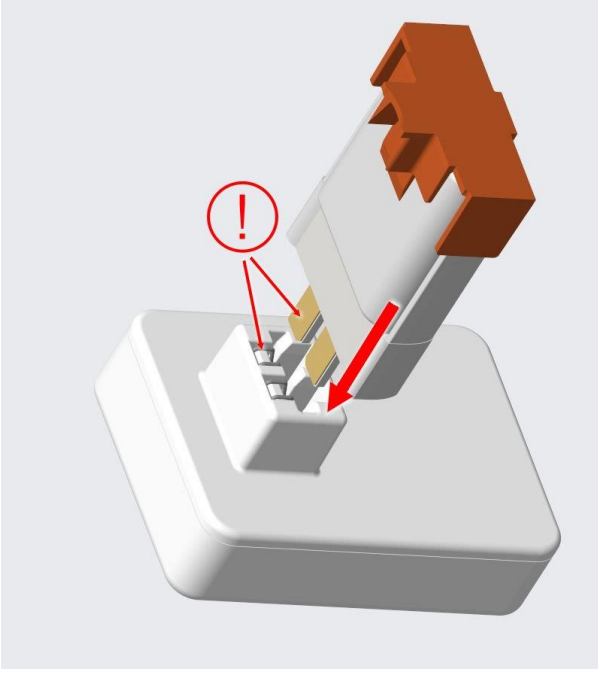

Insert the battery card into the charger slot, making sure that the gold connectors are on the right side (opposite the charger's steel wires).

Use the USB cable to connect an USB port or a mobile phone USB wall charger to the charge device.

FLYING YOUR X-FLY

Conditions of use

Indoor use doesn't require any conditions except a room big enough to fly around without obstacle.

Outdoor use requires adapted weather conditions, ideally no wind at all (recommended for beginner, compulsory to balance wings, see below), and no rain.

For an experienced user, wind up to 10 mph (16 km/h) is acceptable if it's steady. It is advised to choose an open area, far from trees or buildings, which could create whirlwinds. Avoid flying nearby a road, or water, where it could fall by accident.

Basic use of the App

On your smartphone, launch the app. We refer to its home page as the "nest" in the rest of this document.

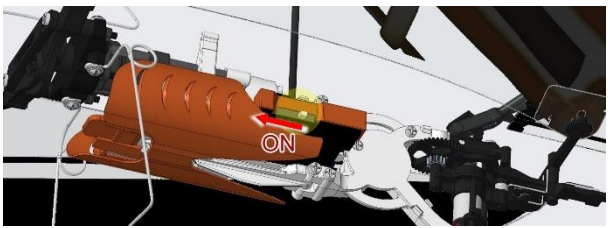

Switch X-Fly ON.

The application will recognize your X-Fly and display its image and name (that can be edited). The blue LED on your X-Fly will stop flashing and stay lit.

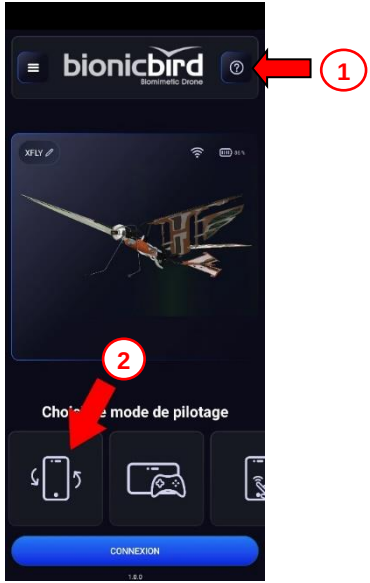

Help button: On every page of the app, you'll find a help button (1) in the top right-hand corner that explains the functions and settings on the page in great visual detail. That's why we're going to describe just a few basic functions to get you started with X-fly.

At the bottom, click on the TILT mode icon (2). This is the most immersive mode, which quickly frees your mind from the commands. Hold your smartphone with one hand, controlling the throttle with your thumb, and tilting your device to control the flight direction.

Tip: *Don't grasp your smartphone using your whole hand, rather rest it on your four fingers with your thumb on the screen so you can give yourself the greatest freedom to tilt on both sides by turning your wrist.*

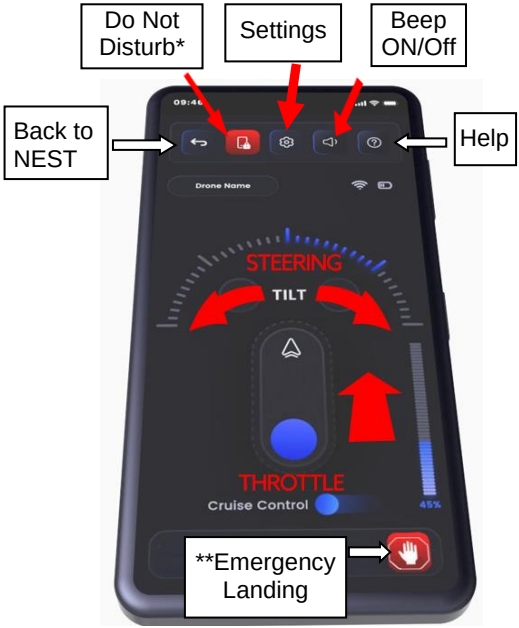

Steering control: The direction of a turn (right/left) and its angle is controlled by the tilt angle of the smartphone. *(TIP: The tilt sensitivity can be adjusted in the settings screen)*. When the steering is activated, a vibration and

a "beep" let you know, without having to look at your screen. *(TIP: The beep can be deactivated with the "Beep On/Off" button).*

Throttle control: This controls the flapping speed of the wings and allows you to control the altitude.

Important: The cursor position is relative. Wherever you press on the screen, this defines the throttle zero point. Then slide your finger up or down to accelerate or decelerate. Thanks to this, you never have to look at your screen and can always keep your attention on X-Fly!

(TIP: The "Origin" button will activate/deactivate this behavior, which isn't recommended)

If you take your finger off, you cut the throttle.

(TIP: The "cruise control" will remove this "spring back effect". When ON, if you take off your finger, the throttle will stay unchanged until next press)

(TIP: Throttle slider travel can be adjusted as required in the settings panel)

You should now try the commands while holding the bird to get used to the controls.
PLEASE NOTE: When right-hand flight assistance is active, untimely left and right turns may be triggered while the aircraft is in your hand. You can deactivate it for testing purposes.

*** Do Not Disturb:** When activated, this will lock the X-Fly's control screen to prevent notifications or calls from appearing above it and causing you to lose control of the aircraft while flying. To exit, click on it again.

** **Emergency landing:**

If you need to lower X-Fly quickly (in a risky situation), **press and hold this button** for as long as necessary.

X-Fly will automatically deactivate anti stall function and turn fully to the right while throttle at maximum, so that X-Fly will nosedive towards the ground.

Be careful! The button **must be held down to operate**. As soon as the button is released, the emergency landing mode is deactivated.

Do not press the button again when X-Fly is on the ground, as you could damage it.

ADJUSTING THE TAIL - X-FLY FLYING SPEED

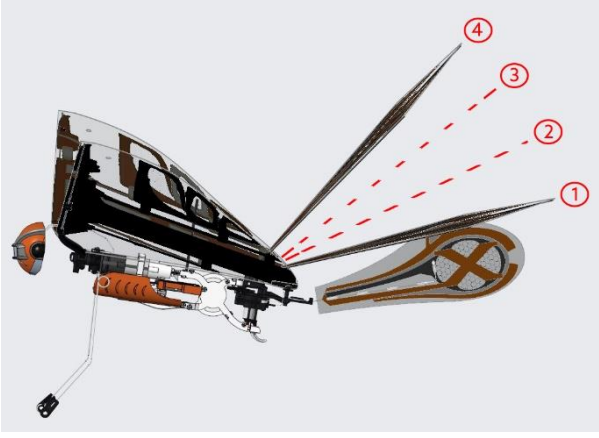

The tail angle is adjustable (4 notches), making possible to adjust the flying speed of X-Fly. To change the notch, just push or pull the base of the tail.

*TIP: For your first attempt, we suggest you try it outside in a wide-open space, **with no wind at all**, and set the tail in the highest position (position 4). You can then gradually lower the tail to increase the speed and distance of your flights.*

* For indoor flights, in a confined space, or for slow flights: set the tail in a high position (choose 3 or 4)

* For outdoor flights, in a big space or for fast flights: adjust the tail in a low position (1 to 3).

Knowing that: Position 1 is for best performance but requires some practice.

TIP: When picking up X-Fly after landing, always check that the tail hasn't moved to another notch. If so, set it back again.

Flying X-Fly

It is recommended to train first by launching X-Fly from your hand, before to attempt take-offs from the floor.

Launching from hand: Hold X-Fly firmly by the orange hull, pointing it in the direction you want it to fly, flap the wings (full gas) then launch it gently in front of you like a paper airplane. *(TIP: if there is wind, always point X-Fly facing the wind).*

Let it gain some altitude before trying any turns. If it flies downward, you can try with the tail one notch higher.

Take-off from the floor: this requires a surface that's not too grainy, so that the paws don't get stuck. In some cases, increasing the throttle gradually is necessary.

*(TIP: To **take off from a table** you need to put X-Fly at*

least 60 cm away from the edge, or it will fall down)

(TIP Gliding flight: To make X-Fly glide: gain altitude, reduce speed and get X-Fly flying straight, then cut the throttle suddenly)

Out of range:

If X-Fly flies out of range of the smartphone, just get closer to the X-Fly and it will connect again immediately.

End of flight: You can monitor X-Fly battery levels on the app screen. When it drops below 15%, you'll soon need to recharge the battery. If you wait too long, the battery may cut out completely. This is not a problem, as the battery will restart as soon as you start charging.

FIRST FLIGHT - TRIMMING THE WINGS

To get the best performance from your X-Fly, we strongly advise you to start by balancing the wings.

To do this, first **disable the pilot assistance functions**. Go to the "Settings" page for your chosen flying mode, then click on the "Flight" button at the bottom of the page. Then deactivate the 2 assistants (straight flight and anti-stall).

Fly X-Fly in a wide-open space with no wind. First fly in a straight line for a while (without turning), then test turns on both sides.

If while flying, you notice the following unbalanced flight:

- Immediately when launched, the X-Fly turns to one side and go directly to the ground (big unsteadiness).

- You are not using the steering, but the X-Fly turn left or right in small circles.

- It seems that the X-Fly turns more easily to one side

than to the other.

Then you will have to trim the wings.

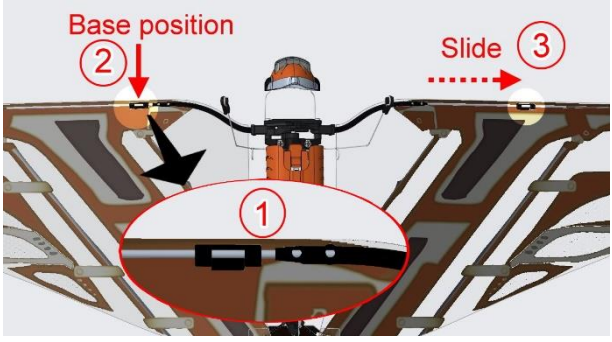

Each wing is equipped with a sliding ballast (1). Its base position (2) is closest to the body. It can slide towards the tip (3) to create a ballast differential between the 2 wings.

The principle is to increase the ballast of the wing opposite the direction of the turn you have observed. For example, if X-Fly tends to turn to the right, move the ballast of its left wing to the tip and leave that of the right wing unchanged (basic position).

Try flying the X-Fly again and, if necessary, repeat the process until you achieve acceptable straight flight or a slight turn. Your X-Fly is now balanced, and its performance optimized.

You can go back and **reactivate the pilot assistance** functions.

IMPORTANT NOTES ABOUT THE USE OF X-FLY

- It is strongly **recommended to charge** the X-Fly at least at 50% of the battery capacity **before to store** it after use, the battery life shall be shortened if not.

- Below 5°C, LiPo batteries lose capacity and power. Flight performance and duration will therefore be particularly impaired.

- The motor and clockworks inside the X-FLY are very efficient, with very tight tolerance. They need a training period during which they will get free of friction. The maximum power and flying time will be reached after about ten flights.

- The wings structures are made of very light and rigid material necessary to get good flying performances. They are very robust in flying conditions and can last hundreds of flights. But they are not able to withstand heavy weight or force out of normal use, like manual bending, storage below heavy things, stepping on it. Therefore, they are replacement parts that can be purchased separately, as spare parts.

NEVER TRY TO MOVE THE WINGS UP AND DOWN MANUALLY

WARNING:

This product complies with the following standard and complies with FCC part 15 (2008)

FCC Part 15.247 for Bluetooth BLE & FCC Part 2.1091

CE-RED/ EN 300 328 for Bluetooth BLE & EN 62479/EN50663 & EMC EN 301 489-1/-17 & LVD EN 62368-1

DEEE(WEEE) directive 2002/96/EC

FDD ID: 2BF73-X-FLY

FCC ID: 2BF73-X-FLY

***Users should keep and retain this manual for future reference**. Keep the packaging since it contains important information. Keep name and address.*

SAFETY PRECAUTION:

Not suitable for children under 36 months, small parts may be swallowed.

Do not play next to an animal or a person.

Do not use near electrical lines or during a storm.

Do not fly X-Fly near electrical lines, trees, buildings and any other obstacles.

Keep away from water.

Never fly or follow X-Fly in the streets.

Keep X-Fly away from face and eye.

Never put your fingers close to X-Fly when it moves.

Always use the transmitter charger included in this equipment. Always place the transmitter on the "OFF" position when not flying.

BATTERY CAUTIONS:

Works with (1) rechargeable LI-PO (lithium Polymer) battery.

Only batteries of the same or equivalent type as recommended are to be used; do not mix old and new batteries, different types of batteries (standard carbon zinc, alkaline or rechargeable) or rechargeable batteries of different capacity.

Rechargeable batteries are only to be charged by an adult.

Respect the correct polarity (-) or (+)

Do not try to recharge non-rechargeable batteries.

Rechargeable batteries are to be removed from the toy before being charged.

Do not throw the batteries into the fire.

Replace all batteries of the same type/brand at the same time.

The supply terminals are not to be short-circuited.

Remove exhausted batteries from your X-Fly.

Batteries are only to be replaced by an adult.

Only use the battery charger provided with the box to charge the Li-poly battery in X-Fly.

DEEE:

When this appliance is out of use, please remove all batteries and dispose of them separately. Bring electrical appliances to the local collecting points for waste electrical and electronic equipment. Do not throw in domestic refuse.

WARNING:

CHOKING HAZARD – small parts

Not for children under 3 years

FCC Warning

This device complies with Part 15 of the FCC Rules. Operation is subject to the following two conditions:
(1) This device may not cause harmful interference, and (2) this device must accept any interference received, including interference that may cause undesired operation.

NOTE 1: This equipment has been tested and found to comply with the limits for a Class B digital device, pursuant to part 15 of the FCC Rules. These limits are designed to provide reasonable protection against harmful interference in a residential installation. This equipment generates, uses and can radiate radio frequency energy and, if not installed and used in accordance with the instructions, may cause harmful interference to radio communications. However, there is no guarantee that interference will not occur in a particular installation. If this equipment does cause harmful interference to radio or television reception, which can be determined by turning the equipment off and on, the user is encouraged to try to correct the interference by one or more of the following measures:
- Reorient or relocate the receiving antenna.
- Increase the separation between the equipment and receiver.
-Connect the equipment into an outlet on a circuit different from that to which the receiver is connected.
-Consult the dealer or an experienced radio/TV technician for help.

NOTE 2: Any changes or modifications to this unit not expressly approved by the party responsible for compliance could void the user's authority to operate the equipment.

RF Exposure Statement
To maintain compliance with FCC'S RF Exposure guidelines, This equipment should be installed and operated with minimum distance of 20cm between the radiator and your body. This device and its antenna(s) must not be co-located or operation in conjunction with any other antenna or transmitter.