L915-7XQ9-V0 LoRa Module

LoRa Sensor, Beacon Applications

L915-7XQ9-V0 LoRa transceiver module uses a Semtech SX1262 sub-GHz radio transceiver. A u.FL connector is on-board for external antenna.

L915-7XQ9-V0 Specifications:

- Semtech SX1262 transceiver.
- Size:10.2x15mm
- Uses a TCXO instead of the crystal in L915-7XQ9-V0 for better frequency stability.

Model Summary

module	LR62E1
BLE module/Flash/RAM	
Size	10.2x15.0mm
GPIO	
Antenna LoRa/BLE	u.FL
LoRa max. TX power, conducted/radiated	
BLE max. TX power, conducted/radiated	
Certifications	
Availability	

Table Of Contents

1. Introduction 3
2. Product Overview 3
Semtech SX1262 3
L915-7XQ9-V0 3
Mechanical Drawings 4
L915-7XQ9-V0 Pin Functions 5
3. Transmission Power Settings 6
4. Miscellaneous 7
Soldering Temperature-Time Profile for Re-Flow Soldering 7
Cautions, Design Notes, and Installation Notes 7
Packaging 8
FCC Label 10

L915-7XQ9-V0 LoRa Module

1. Introduction

L915-7XQ9-V0 LoRa module with Semtech SX1262 transceiver is ideal for long range wireless applications. A smart phone can set up sensor or beacon easily through Bluetooth interface.

2. Product Overview

Semtech SX1262

Semtech SX1262 data sheets can be downloaded from this webpage.

https://www.fanstel.com/wirelessdocument

A block diagram is below.

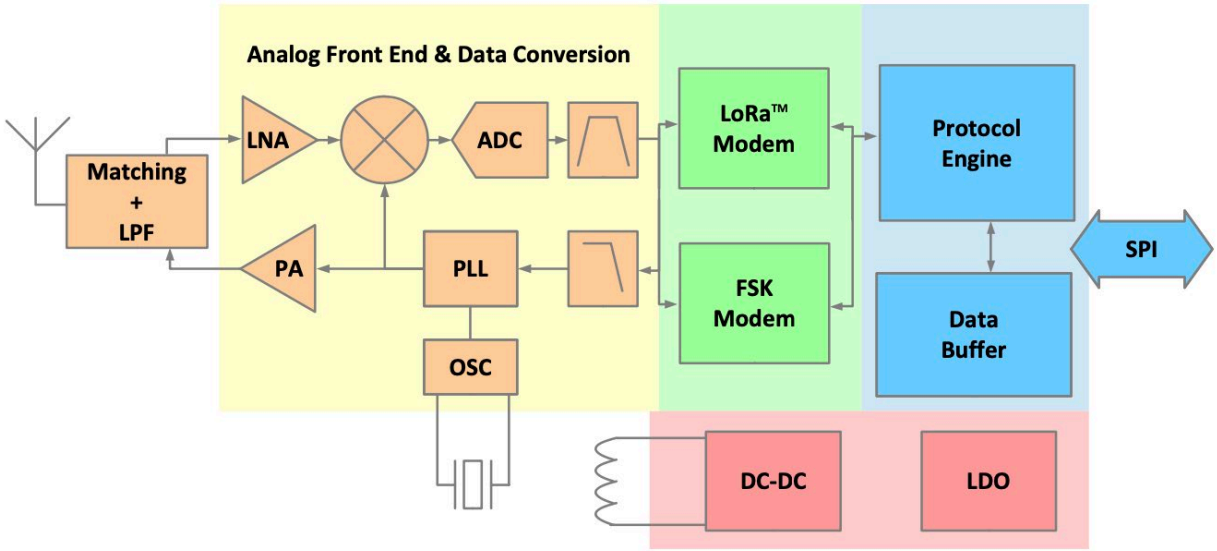

L915-7XQ9-V0

- A LoRa module with Semtech SX1262, 915 MHz.
- Uses a TCXO instead of a crystal for improved frequency stability.
- An u.FL connector for external antenna.
- 10 castellated pins.
- Size: 10.2x15mm.

Mechanical Drawings

The followings are mechanical drawings of L915-7XQ9-V0,
top view.

Library components for PADS and EAGLE can be downloaded from

http://www.fanstel.com/download-document/

For other PCB layout tools, please download evaluation board Gerber files and extract library component.

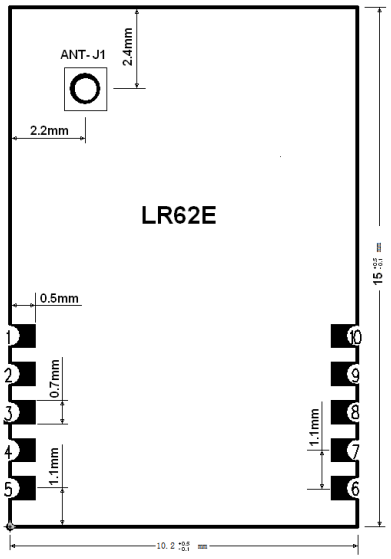

L915-7XQ9-V0 LoRa Module

L915-7XQ9-V0 Pin Functions

The followings are L915-7XQ9-V0 pin assignment. Pin functions are in a table below. Please refer to Semtech SX1262 Product Specifications for detailed descriptions and features supported. It can be downloaded from:

https://www.fanstel.com/wirelessdocument

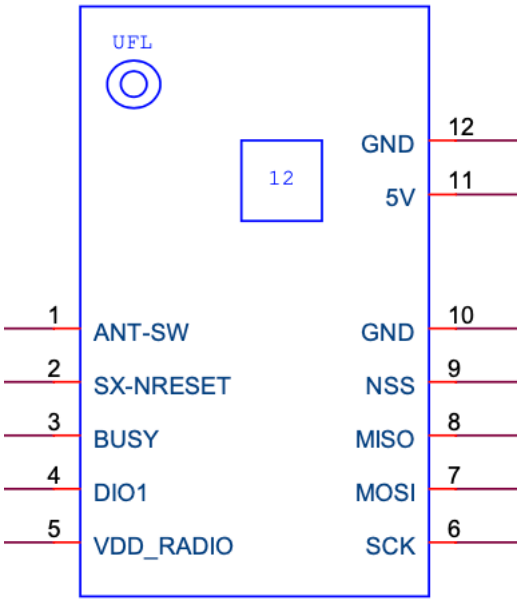

LR62C		SX1262	
pin#	pin name	pin#	Descriptions
1	ANT-SW		Antenna switch
2	SX-NRESET	15	Reset signal, active low
3	BUSY	14	Busy indicator
4	DIO1	13	Multiple purpose Digital IO
5	VDD	1	DC input voltage, 1.8V to 3.7V
6	SCK	18	SPI clock
7	MOSI	17	SPI Slave input
8	MISO	16	SPI Slave Output
9	NSS	19	SPI Slave Select
10	GND	20	Ground
11	5V		Power amplifier 5V regulated DC power input
12	GND		Power amplifier ground

3. Transmission Power Settings

The conditions for L915-7XQ9-V0 to transmit at +20.3 dBm:

- Regulated 5V, 1.5 Amp DC power to the 5V pin.
- Regulated 3.3V DC power to the VDD pin.
- Set SX1262 TX power to +22 dBm.

5. Miscellaneous

Soldering Temperature-Time Profile for Re-Flow Soldering

Maximum number of cycles for re-flow is 2. No opposite side re-flow is allowed due to module weight.

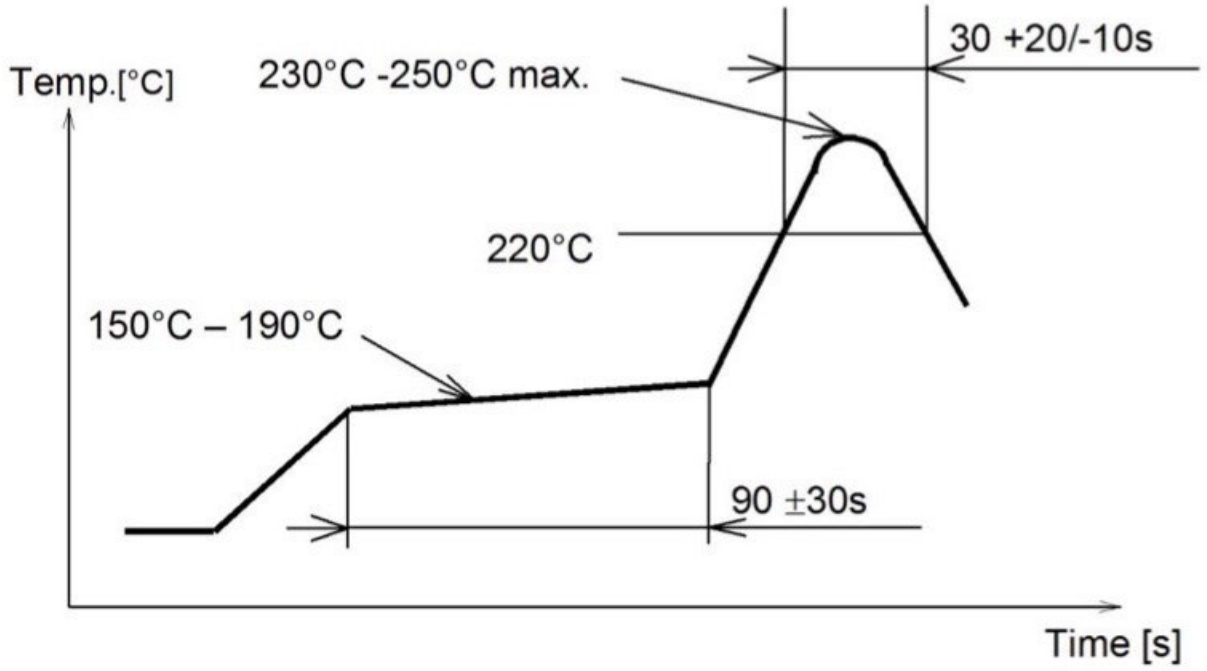

Cautions, Design Notes, and Installation Notes

Failure to follow the guidelines set forth in this document may result in degrading of the product's functions and damage to the product.

Design Notes

(1) Follow the conditions written in this specification, especially the control signals of this module.

(2) The supply voltage has to be free of AC ripple voltage (for example from a battery or a low noise regulator output). For noisy supply voltages, provide a decoupling circuit (for example a ferrite in series connection and a bypass capacitor to ground of at least 47uF directly at the module).

(3) This product should not be mechanically stressed when installed.

(4) Keep this product away from heat. Heat is the major cause of decreasing the life of these products.

(5) Avoid assembly and use of the target equipment in conditions where the products' temperature may exceed the maximum tolerance.

(6) The supply voltage should not be exceedingly high or reversed. It should not carry noise and/or spikes.

(7) this product away from other high frequency circuits.

Notes on Antenna and PCB Layout

(1) Don't use a module with internal antenna inside a metal case.

(2) For PCB layout:

- Avoid running any signal line below module whenever possible,
- No ground plane below antenna,
- If possible, cut-off the portion of main board PCB below antenna.

Installation Notes

(1) Reflow soldering is possible twice based on the time-temperature profile in this data sheets. Set up the temperature at the soldering portion of this product according to this reflow profile.

(2) Carefully position the products so that their heat will not burn into printed circuit boards or affect the other components that are susceptible to heat.

(3) Carefully locate these products so that their temperatures will not increase due to the effects of heat generated by neighboring components.

(4) If a vinyl-covered wire comes into contact with the products, then the cover will melt and generate toxic gas, damaging the insulation. Never allow contact between the cover and these products to occur.

(5) This product should not be mechanically stressed or vibrated when reflowed.

(6) If you want to repair your board by hand soldering, please keep the conditions of this chapter.

(7) Do not wash this product.

(8) Refer to the recommended pattern when designing a board.

(9) Pressing on parts of the metal cover or fastening objects to the metal will cause damage to the unit.

(10) For more details on LGA (Land Grid Array) soldering processes refer to the application note.

Usage Condition Notes

(1) Take measures to protect the unit against static electricity. If pulses or other transient loads (a large load applied in a short time) are applied to the products, check and evaluate their operation before assembly on the final products.

(2) Do not use dropped products.

(3) Do not touch, damage or soil the pins.

(4) Follow the recommended condition ratings about the power supply applied to this product.

(5) Electrode peeling strength: Do not add pressure of more than 4.9N when soldered on PCB

(6) Pressing on parts of the metal cover or fastening objects to the metal cover will cause damage.

(7) These products are intended for general purpose and standard use in general electronic equipment, such as home appliances, office equipment, information and communication equipment.

Storage Notes

(1) The module should not be stressed mechanically during storage.

(2)Do not store these products in the following conditions or the performance characteristics of the product, such as RF performance will be adversely affected:

- Storage in salty air or in an environment with a high concentration of corrosive gas.
- Storage in direct sunlight
- Storage in an environment where the temperature may be outside the range specified.
- Storage of the products for more than one year after the date of delivery storage period.

(3) Keep this product away from water, poisonous gas and corrosive gas.

(4) This product should not be stressed or shocked when transported.

(5) Follow the specification when stacking packed crates (max. 10).

Safety Conditions

These specifications are intended to preserve the quality assurance of products and individual components. Before use, check and evaluate the operation when mounted on your products. Abide by these specifications, without deviation when using the products. These products may short-circuit. If electrical shocks, smoke, fire, and/or accidents involving human life are anticipated when a short circuit occurs, then provide the following failsafe functions, as a minimum.

(1)Ensure the safety of the whole system by installing a protection circuit and a protection device.

(2)Ensure the safety of the whole system by installing a redundant circuit or another system to prevent a dual fault causing an unsafe status.

Other Cautions

(1)This specification sheet is copyrighted. Reproduction of this data sheets is permissible only if reproduction is without alteration and is accompanied by all associated warranties, conditions, limitations, and notices.

(2)Do not use the products for other purposes than those listed.

(3)Be sure to provide an appropriate failsafe function on your product to prevent an additional damage that may be caused by the abnormal function or the failure of the product.

(4)This product has been manufactured without any ozone chemical controlled under the Montreal Protocol.

(5)These products are not intended for other uses, other than under the special conditions shown below. Before using these products under such special conditions, check their performance and reliability under the said special conditions carefully to determine whether or not they can be used in such a manner.

- In liquid, such as water, salt water, oil, alkali, or organic solvent, or in places where liquid may splash.
- In direct sunlight, outdoors, or in a dusty environment
- In an environment where condensation occurs.
- In an environment with a high concentration of harmful gas.

(6) If an abnormal voltage is applied due to a problem occurring in other components or circuits, replace these products with new products because they may not be able to provide normal performance even if their electronic characteristics and appearances appear satisfactory.

FCC LABEL

The Original Equipment Manufacturer (OEM) must ensure that the OEM modular transmitter must be labeled with its own FCC ID number. This includes a clearly visible label on the outside of the final product enclosure that displays the contents shown below. If the FCC ID is not visible when the equipment is installed inside another device, then the outside of the device into which the equipment is installed must also display a label referring to the enclosed equipment

The end product with this module may be subject to perform FCC part 15 unintentional emission test requirement and be properly authorized.

This device is intended for OEM integrator only.

Federal Communications Commission (FCC) Statement

15.21

You are cautioned that changes or modifications not expressly approved by the part responsible for compliance could void the user's authority to operate the equipment.

15.105(b)

This equipment has been tested and found to comply with the limits for a Class B digital device, pursuant to part 15 of the FCC rules. These limits are designed to provide reasonable protection against harmful interference in a residential installation. This equipment generates, uses and can radiate radio frequency energy and, if not installed and used in accordance with the instructions, may cause harmful interference to radio communications. However, there is no guarantee that interference will not occur in a particular installation. If this equipment does cause harmful interference to radio or television reception, which can be determined by turning the equipment off and on, the user is encouraged to try to correct the interference by one or more of the following measures:

-Reorient or relocate the receiving antenna.
-Increase the separation between the equipment and receiver.
-Connect the equipment into an outlet on a circuit different from that to which the receiver is connected.
-Consult the dealer or an experienced radio/TV technician for help.

This device complies with Part 15 of the FCC Rules. Operation is subject to the following two conditions:
1) this device may not cause harmful interference, and
2) this device must accept any interference received, including interference that may cause undesired operation of the device.

FCC RF Radiation Exposure Statement

This equipment complies with FCC radiation exposure limits set forth for an uncontrolled environment.
This equipment should be installed and operated with minimum distance 20cm between the radiator & your body.
This transmitter must not be co-located or operating in conjunction with any other antenna or transmitter.
Note: The end product shall has the words "Contains Transmitter Module FCC ID: 2BF8N-RCM7XQ9"

Canada, Industry Canada (IC)

This Class B digital apparatus complies with Canadian ICES-003

Cet appareil numérique de classe B est conforme à la norme NMB-003.

This device complies with Industry Canada's RSS for licence-exempt radio apparatus. The operation is authorised under the following two conditions:

(1) the device shall not cause interference, and

(2) The user of the device must accept any adioelectric interference experienced, even if the interference is likely to affect the operation of the device.

Radiation exposure statement:

This equipment complies with ISED radiation exposure limits established for an uncontrolled environment. This equipment should be installed and operated at a minimum distance of 20 cm between the heater and your body.

This transmitter must not be co-located or operate in conjunction with any other antenna or transmitter.

Le present appareil est conforme aux CNR d'Industrie Canada applicables auxappareils radio exempts de licence.L'exploitation est autorisée aux deux conditions suivantes:

(1) l'appareil ne doit pas produire de brouillage, et

(2) l'utilisateur de l'appareil doit accepter tout brouillage adioélectrique subi, même si le brouillage est susceptible d'en compromettre le fonctionnement.

Déclaration d'exposition aux radiations:

Cet équipement est conforme aux limites d'exposition au rayonnement ISED établies pour un environnement non contrôlé.

Cet équipement doit être installé et utilisé à une distance minimale de 20 cm entre le radiateur et votre corps.

Cet émetteur ne doit pas être co-localisé ou fonctionner en conjonction avec une autre antenne ou un autre émetteur.

ICES-003 RF Radiation Exposure Statement

This equipment complies with ICES-003 radiation exposure limits set forth for an uncontrolled environment. This equipment should be installed and operated with minimum distance 20cm between the radiator & your body.

This transmitter must not be co-located or operating in conjunction with any other antenna or transmitter.

Note: The end product shall has the words “Contains Transmitter Module IC: 32925-RCM7XQ9”

(Modular approval) End Product Labeling:

The final end product must be labeled in a visible area with the following: “Contains IC: 32925-RCM7XQ9”.

OEMstatement

The Original Equipment Manufacturer (OEM) must ensure that the OEM modular transmitter must be labeled with its own FCC ID number. This includes a clearly visible label on the outside of the final product enclosure that displays the contents shown below. If the FCC ID is not visible when the equipment is installed inside another device, then the outside of the device into which the equipment is installed must also display a label referring to the enclosed equipment

The end product with this module may subject to perform FCC part 15 unintentional emission test requirement and be properly authorized.

This device is intended for OEM integrator only

This radio transmitter (192170139/AA/00) has been approved by Innovation, Science and Economic Development Canada to operate with the antenna types listed Below, with the maximum permissible gain indicated. Antenna types not included in this list that Have a gain greater than the maximum gain indicated for any type listed are strictly prohibited for use with this device.

L915-7XQ9-V0: Dipole Antenna, 2.3dBi

OEM Guidance

1. Applicable FCC rules

This module is granted by Single Modular Approval. It complies to the requirements of FCC part 15C, section 15.247 rules and ISED RSS-247 Non-DTS.

2. The specific operational use conditions

This module can be used in IoT devices. The input voltage to the module is nominally 5 V DC. The operational ambient temperature of the module is –40 °C ~ 65 °C.

3. Limited module procedures

N/A

4. Trace antenna design

N/A

5. RF exposure considerations

The equipment complies with FCC radiation exposure limits set forth for an uncontrolled environment. This equipment should be installed and operated with minimum distance 20cm between the radiator and your body. If the equipment built into a host as a portable usage, the additional RF exposure evaluation may be required as specified by 2.1093.

6. Antenna

Antenna type: Flexible PCB antenna Peak gain: 4.5dBi

Dipiole Peak gain 1.46dBi

7. Label and compliance information

An exterior label on OEM's end product can use wording such as the following: "Contains Transmitter Module FCC ID: 2BF8N-RCM7XQ9" or "Contains FCC ID: 2BF8N-RCM7XQ9."

8. Information on test modes and additional testing requirements

a)The modular transmitter has been fully tested by the module grantee on the required number of channels,modulation types, and modes, it should not be necessary for the host installer to re-test all the available transmitter modes or settings. It is recommended that the host product manufacturer, installing the modular transmitter,perform some investigative measurements to confirm that the resulting composite system does not exceed the spurious emissions limits or band edge limits (e.g., where a different antenna may be causing additional emissions).

b)The testing should check for emissions that may occur due to the intermixing of emissions with the other transmitters, digital circuitry, or due to physical properties of the host product (enclosure). This investigation is especially important when integrating multiple modular transmitters where the certification is based on testing each of them in a stand-alone configuration. It is important to note that host product manufacturers should not assume that because the modular transmitter is certified that they do not have any responsibility for final product compliance.

c)If the investigation indicates a compliance concern the host product manufacturer is obligated to mitigate the issue. Host products using a modular transmitter are subject to all the applicable individual technical rules as well as to the general conditions of operation in Sections 15.5, 15.15, and 15.29 to not cause interference. The operator of the host product will be obligated to stop operating the device until the interference have been corrected .

9. Additional testing, Part 15 Sub part B disclaimer The final host / module combination need to be evaluated against the FCC Part 15B criteria for unintentional radiators in order to be properly authorized for operation as a Part 15 digital device.

The host integrator installing this module into their product must ensure that the final composite product complies with the FCC requirements by a technical assessment or evaluation to the FCC rules, including the transmitter operation and should refer to guidance in KDB 996369. For host products with certified modular transmitter, the frequency range of investigation of the composite system is specified by rule in Sections 15.33(a)(1) through (a)(3), or the range applicable to the digital device, as shown in Section 15.33(b)(1), whichever is the higher frequency range of investigation When testing the host product, all the transmitters must be operating.The transmitters can be enabled by using publicly-available drivers and turned on, so the transmitters are active. In certain conditions it might be appropriate to use a technology-specific call box (test set) where accessory 50 devices or drivers are not available. When testing for emissions from the unintentional radiator, the transmitter shall be placed in the receive mode or idle mode, if possible. If receive mode only is not possible then, the radio shall be passive (preferred) and/or active scanning. In these cases, this would need to enable activity on the communication BUS (i.e., PCIe, SDIO, USB) to ensure the unintentional radiator circuitry is enabled. Testing laboratories may need to add attenuation or filters depending on the signal strength of any active beacons (if applicable) from the enabled radio(s). See ANSI C63.4, ANSI C63.10 and ANSI C63.26 for further general testing details.

The product under test is set into a link/association with a partnering device, as per the normal intended use of the product. To ease testing, the product under test is set to transmit at a high duty cycle, such as by sending a file or streaming some media content.

FCC Warning:

Any Changes or modifications not expressly approved by the party responsible for compliance could void the user’s authority to operate the equipment. This device complies with part 15 of the FCC Rules. Operation is subject to the following two conditions: (1) This device may not cause harmful interference, and (2) This device must accept any interference received, including interference that may cause undesired operation