Read all instructions BEFORE assembly and USE of product.
KEEP INSTRUCTIONS FOR FUTURE USE.

Scan below
for quick video
assembly guide:

newton®

SmartNest™

Model 8410 Instruction Manual

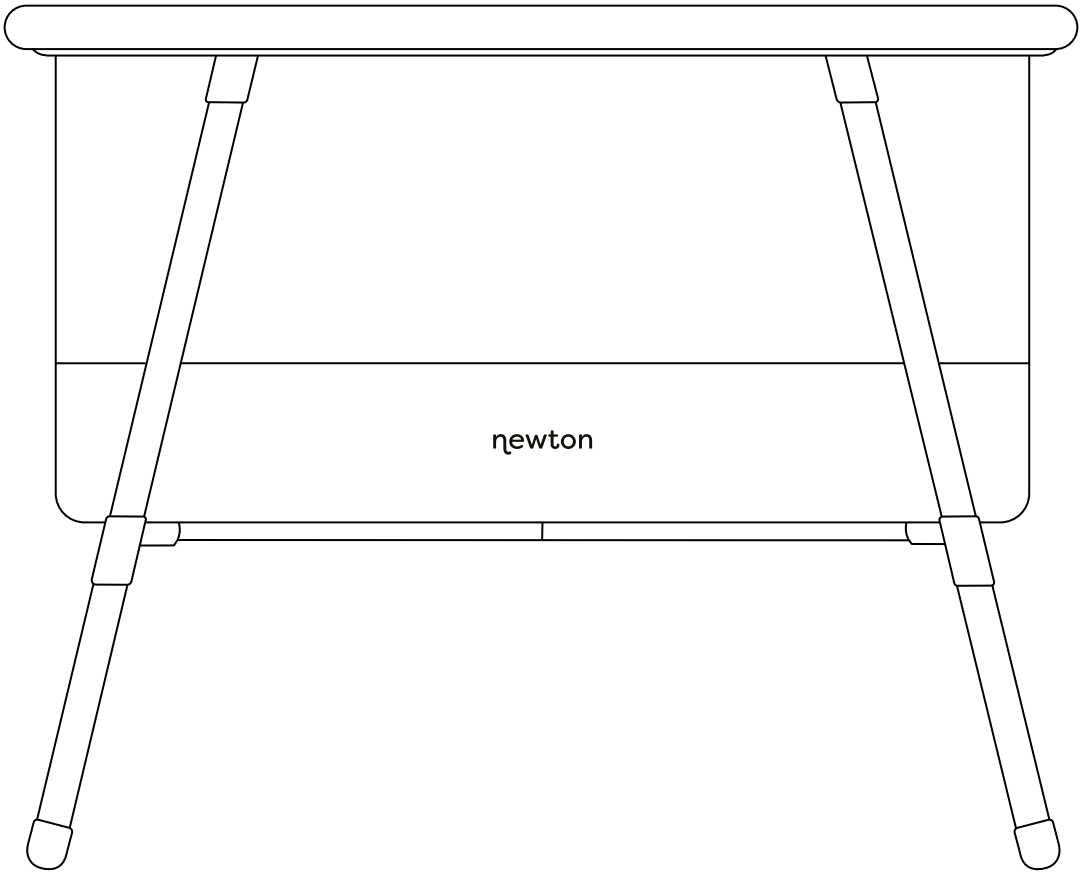

FCC ID: 2BFAR-8410

Any questions? Please feel free to contact us at (800)686-3986
or info@newtonbaby.com. We're always happy to help.

MAN8410-20240313

SmartNest™

Congratulations!

Thank you for choosing the Newton SmartNest™. There's nothing more wonderful than bringing home a new baby — and we're so honored to be a part of your journey.

The SmartNest is a responsive and intuitive smarter bassinet designed to provide your baby with safer, healthier, better sleep (from day one).

The Newton Difference

- Designed in conjunction with leading physicians and sleep experts, the SmartNest detects your baby's cries and moves up and down to replicate a natural breathing motion, gently lulling them back to peaceful sleep. For baby, it's the closest thing to that magical feeling of falling asleep on your chest.

- Utilizing our patented Wovenaire® core, the SmartNest features our award-winning breathable mattress. Babies can breathe right through it! That means a reduced risk of suffocation and peace of mind for you. Complete breathability also helps support temperature regulation, allowing for longer, deeper sleep. And that's always a good thing.

- Because we use a gentle motion, there's no need to strap your baby down for sleep. Per pediatrician recommendations, babies should always be put to sleep on their backs, but rollovers will happen. With Newton, you can rest assured that the entire sleep surface and interior of the bassinet are completely breathable.

- The SmartNest is also the largest smart bassinet on the market. And that matters because, unlike many others, ours allows ample room for baby to snooze safely next to you as they grow — all the way up to six months.

⚠ WARNING

Failure to follow these warnings and the instructions could result in serious injury or death. Keep instructions for future use. Assemble product according to the instructions. Never use the SmartNest if any parts are missing or broken.

SUFFOCATION HAZARD
Infants have suffocated:
• on soft bedding including pillows, comforters, and extra padding
• in gaps between a wrong-size mattress, or extra padding and product sides
• NEVER add a pillow, comforter or another mattress for padding.
• Use only the pad provided by Newton Baby, Inc.
• To reduce the risk of SIDS, pediatricians recommend healthy infants be placed on their back to sleep, unless otherwise advised by your physician.
• If a sheet is used with the pad, use only the one provided by Newton Baby, Inc.

FALL HAZARD
To help prevent falls, do not use this product when the infant begins to push up on hands and knees, can roll over or has reached 25 lbs (11.3 kg), whichever comes first. Move your child to another sleeping product when your child reaches this stage.

ENTRAPMENT HAZARD
• Always read and follow assembly instructions for each product use mode
• Always use ALL required parts. Check instruction manual for a list of required parts. Periodically check product for loose, damaged, or missing parts. DO NOT use SmartNest if any parts are missing, damaged, or broken. Contact Newton Baby, Inc. for replacement parts and instructional literature if needed. DO NOT substitute parts.
• Strings can cause strangulation! Do not place items with a string around a child's neck, such as hood strings or pacifier cords. Do not suspend strings over a bassinet or cradle or attach strings to toys.

STRANGULATION HAZARD
• Children have STRANGLED in cords. Keep power cord out of reach of children.
• Use only on a flat, dry floor.
• NEVER place anything under the SmartNest legs or mattress to elevate the baby's head.
• Strings can cause strangulation! Do not place items with string around a child's neck. Do not suspend strings over a bassinet or cradle or attach strings to toys.
• Do not use if any part of the bassinet/cradle is broken, torn or missing.
• Keep power adapter out of reach of infants and children.

ADDITIONAL WARNINGS
• NEVER place more than one infant in SmartNest at a time
• Never carry SmartNest with infant in it
• Young children should not be allowed to play unsupervised in the vicinity of the SmartNest
• SmartNest should ALWAYS be placed on a horizontal, level floor
• Keep away from open fires and other sources of strong heat, such as electric heaters, gas fires, etc.
• Do not place anything in SmartNest to elevate the mattress. The American Academy of Pediatrics warns that excessive elevation can result in an infant sliding into a position that might make breathing difficult.

CAUTION
• SmartNest IS NOT A SUBSTITUTE FOR ADULT SUPERVISION
• IMMEDIATELY CONTACT YOUR PHYSICIAN IF YOUR BABY IS UNUSUALLY FUSSY OR NOT RESPONDING NORMALLY
• Read and follow instructions before assembly and use.
• Before using, inspect SmartNest for damaged parts, loose or missing components, or sharp edges.
• NEVER use SmartNest if any parts are missing or broken. Request replacement parts and instructional literature via newtonbaby.com if needed. (DO NOT substitute parts.)
• For indoor use only.
• This product is not a toy. Do not allow children to play with it.
• Do not pour water or liquids onto SmartNest.

⚠ WARNING

- Only use the power adapter provided. Use of other power adapters may permanently damage the product.
- Keep this user's guide for future reference.

PRECAUTIONS

- Continue to monitor and check in on your baby as you would normally.
- Read and follow instructions before assembly and use. If you have difficulty reading or understanding these instructions, please reach out to customer support for assistance.
- The universal standard of care is that a responsible adult should always be available and in near enough proximity to promptly respond to a baby's needs. With the SmartNest, there is no change to the standard of care expectation.
- Homes where tobacco, alcohol and drugs are used have shown an increased risk of SIDS/SUID. Consider speaking with your child's health care provider prior to use.

FCC WARNING

This device complies with part 15 of the FCC Rules. Operation is subject to the following two conditions: (1) This device may not cause harmful interference, and (2) this device must accept any interference received, including interference that may cause undesired operation.
Any changes or modifications not expressly approved by the party responsible for compliance could void the user's authority to operate the equipment.

This equipment has been tested and found to comply with the limits for a Class B digital device, pursuant to part 15 of the FCC Rules. These limits are designed to provide reasonable protection against harmful interference in a residential installation. This equipment generates, uses and can radiate radio frequency energy and, if not installed and used in accordance with the instructions, may cause harmful interference to radio communications. However, there is no guarantee that interference will not occur in a particular installation. If this equipment does cause harmful interference to radio or television reception, which can be determined by turning the equipment off and on, the user is encouraged to try to correct the interference by one or more of the following measures:

- Reorient or relocate the receiving antenna.
- Increase the separation between the equipment and receiver.
- Connect the equipment into an outlet on a circuit different from that to which the receiver is connected.
- Consult the dealer or an experienced radio/TV technician for help.

This equipment complies with FCC radiation exposure limits set forth for an uncontrolled environment .
This transmitter must not be co-located or operating in conjunction with any other antenna or transmitter.

Parts List

Check that all parts listed below are included in your package.
If there are any missing parts, contact Newton for replacements before use.

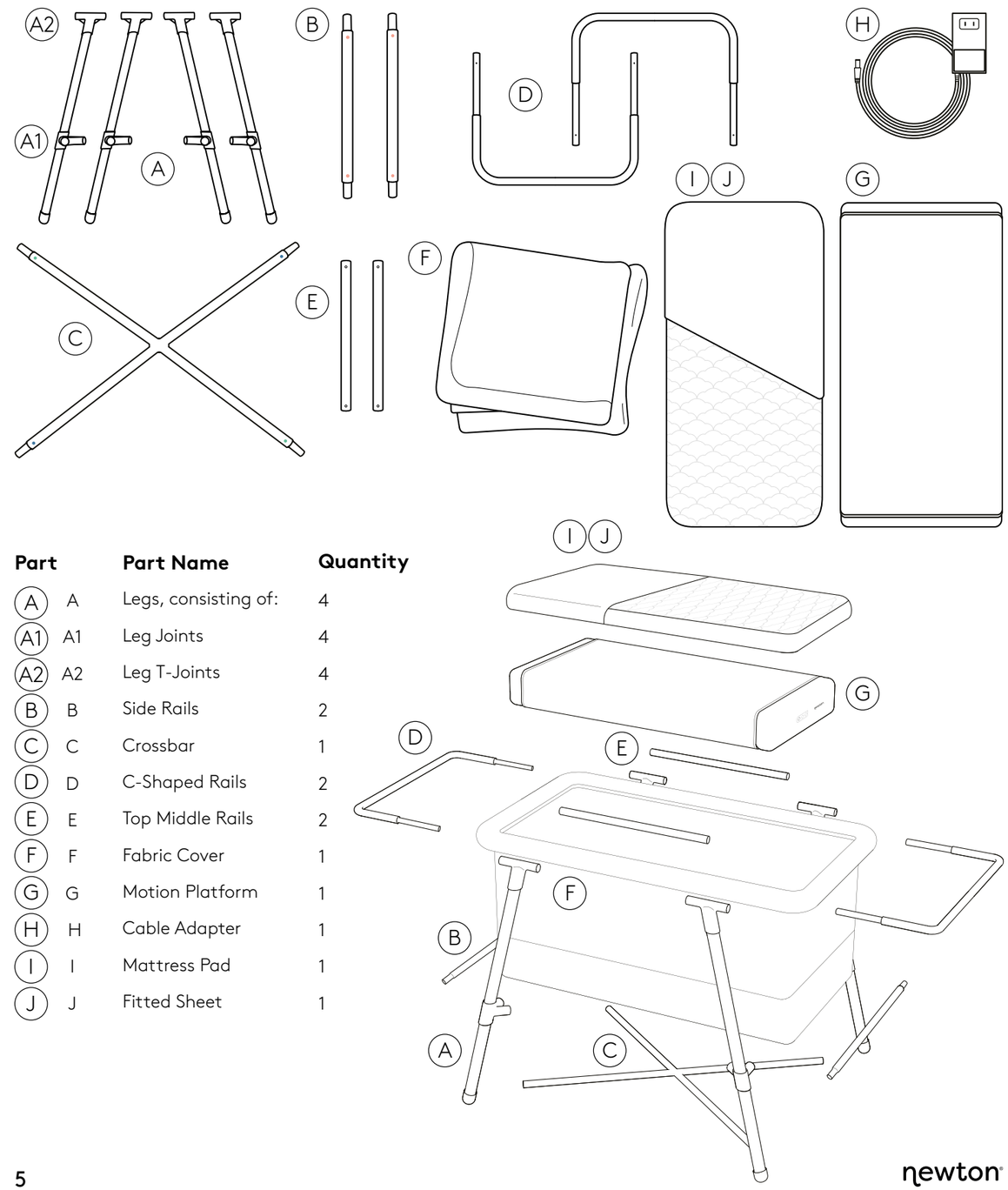

Part		Part Name	Quantity
A	A	Legs, consisting of:	4
A1	A1	Leg Joints	4
A2	A2	Leg T-Joints	4
B	B	Side Rails	2
C	C	Crossbar	1
D	D	C-Shaped Rails	2
E	E	Top Middle Rails	2
F	F	Fabric Cover	1
G	G	Motion Platform	1
H	H	Cable Adapter	1
I	I	Mattress Pad	1
J	J	Fitted Sheet	1

To Assemble the SmartNest

Step 1
Lay (A) Leg with (A2) Leg T-Joint facing down. Push metal button on (B) Side Rail and slide into (A1) Leg Joint until you hear a click.

NOTE: Attach (B) Side Rails and (C) Crossbar tubes by matching the colored dots on the undersides of the (B) Side Rails and plastic (A1) Leg Joints. Coral dots correspond with the (B) Side Rails and green and blue dots correspond with the (C) Crossbar.

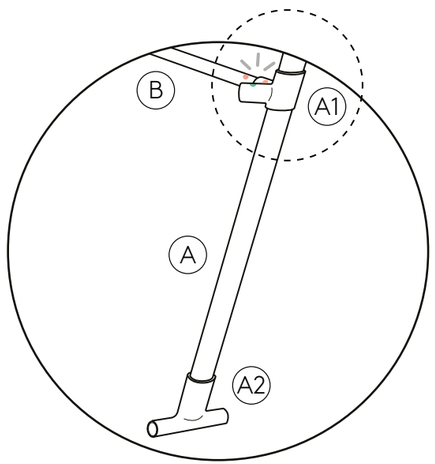

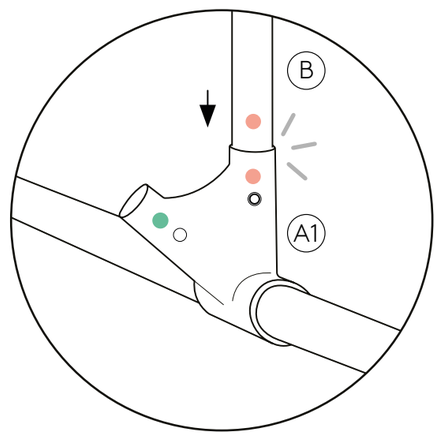

Step 2
Push metal button on corresponding (C) Crossbar tube and slide into (A1) Leg Joint until you hear a click.

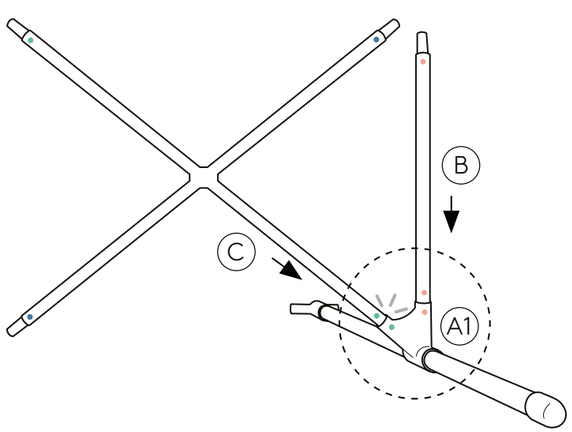

Step 3
Check that the stickers on the underside of the (A1) Leg Joint and metal tubes match correctly.

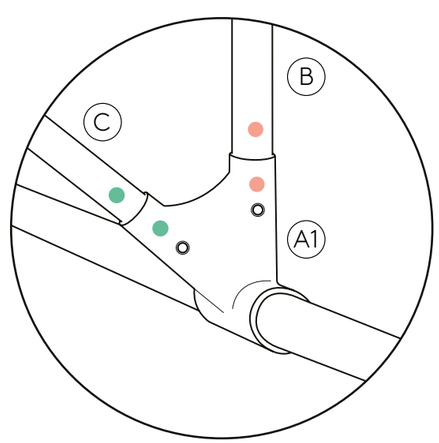

Step 4
Move to the next corner and match the stickers on the underside of the open (B) Side Rail and (C) Crossbar tube with one of the 3 remaining (A1) Leg Joints. Choose the (A) Leg that matches the correct orientation of the stickers.

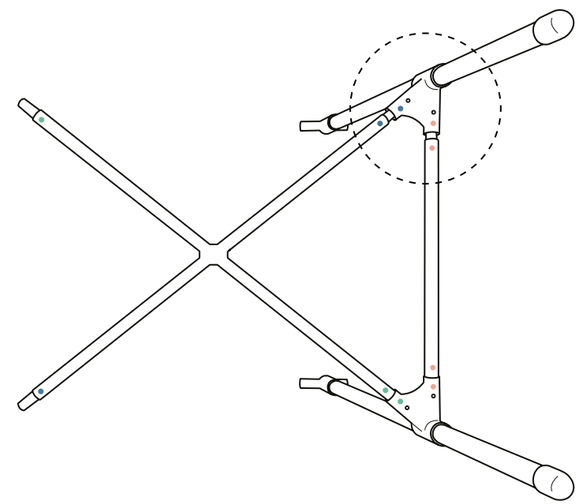

Step 5
Align (B) Side Rail and (C) Crossbar tubes with corresponding stickers on the (A1) Leg Joint. Push each tube halfway in but do not click metal buttons into place. Clicking one side first can make it difficult to click in the other side. Ensure both sides are inserted halfway before clicking the buttons into place.

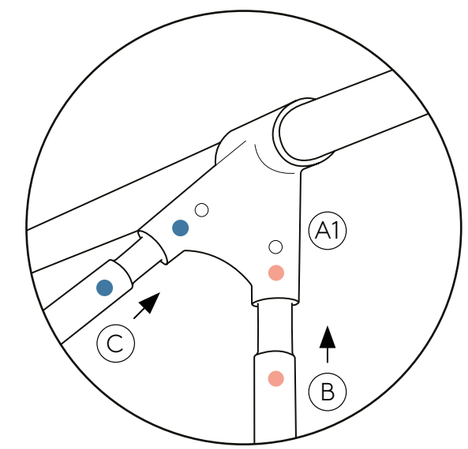

Step 6
Once aligned and halfway inserted, click each metal tube into place.

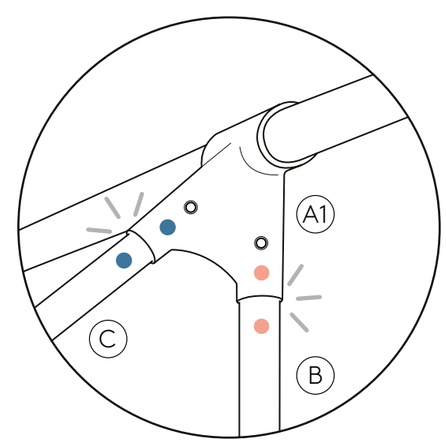

Step 7
Repeat steps for remaining (A) Legs by first aligning 2nd (B) Side Rail with one of the remaining (A1) Leg Joints and clicking into place.

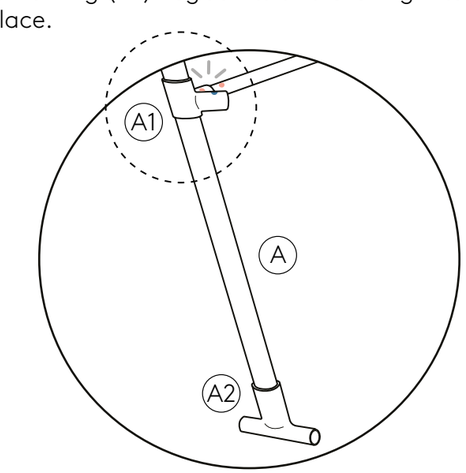

Step 8
Align corresponding (C) Crossbar with the open (A1) Leg Joint hole. Push metal button to click into place.

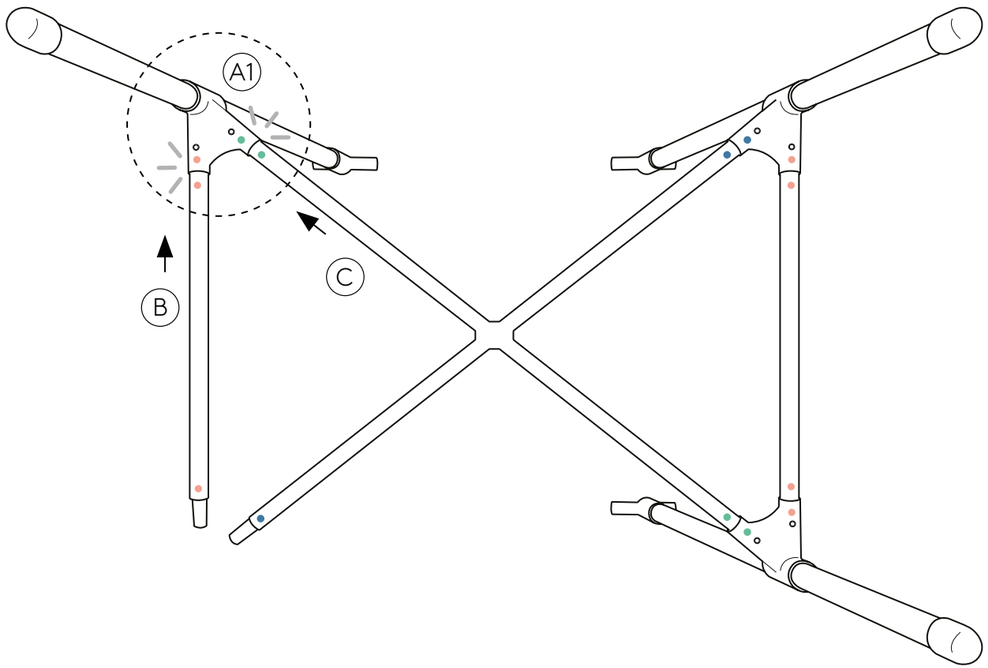

Step 9
Align remaining (A1) Leg Joint with remaining (B) Side Rail and (C) Crossbar tubes. Slide each rail halfway into leg joint before clicking into place.

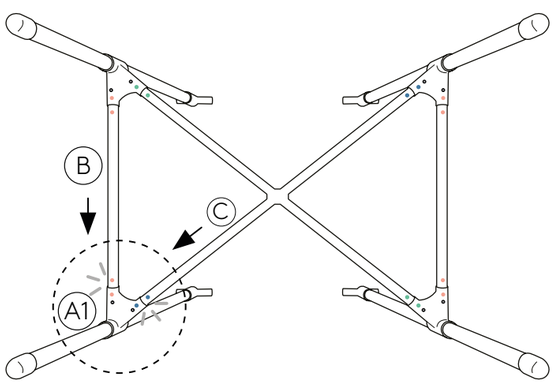

Step 10
Check the undersides of all 4 (A1) Leg Joints to ensure all corresponding stickers match and all metal buttons are clicked into place.

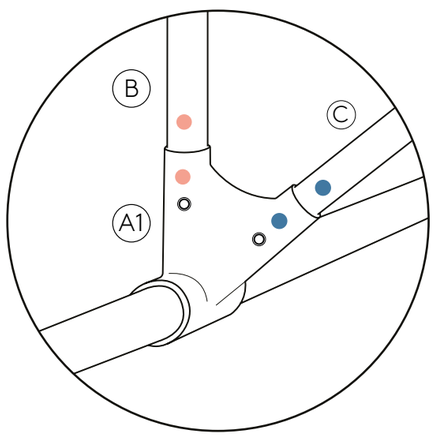

Step 11
Turn base frame over so (A) Legs are pointed down and (A2) Leg T-Joints are facing up.

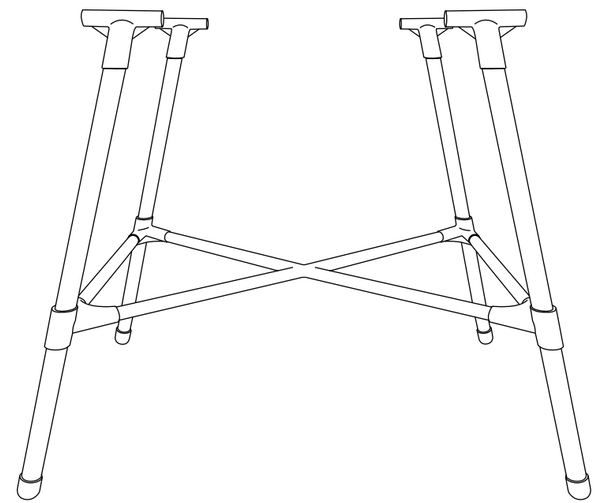

Step 12
Insert (D) C-Shaped Rails into (A2) Leg T-Joints with metal buttons facing down.

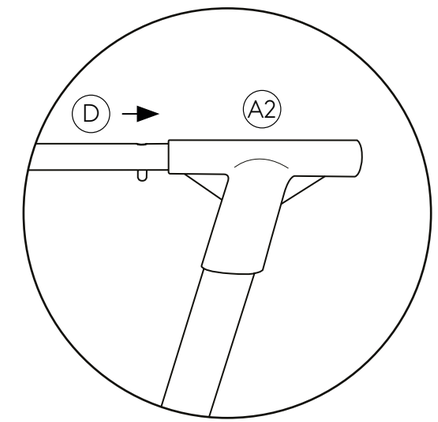

Step 13
Push metal buttons and slide smaller end of (D) C-Shaped Rails through (A2) Leg T-Joints.

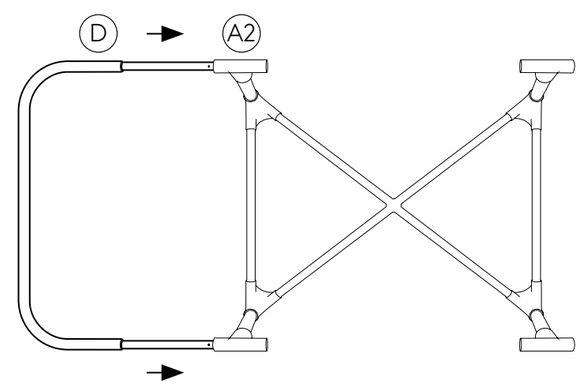

Step 14
Push through until (D) C-Shaped Rail lies flush against (A2) Leg T-Joint.

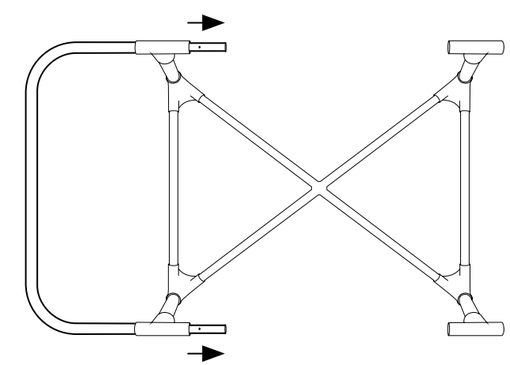

Step 15
Slide both (E) Top Middle Rails onto open (D) C-Shaped Rails. Press metal buttons to click Top Middle Rails into place.

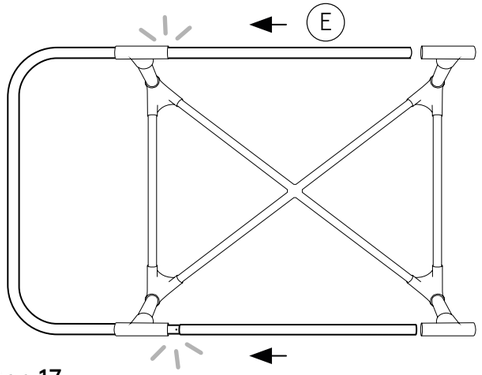

Step 16
Push remaining (D) C-Shaped Rail through (A2) Leg T-joints on other side, until the C-shaped bar lies flush against (A2) Leg T-joints.

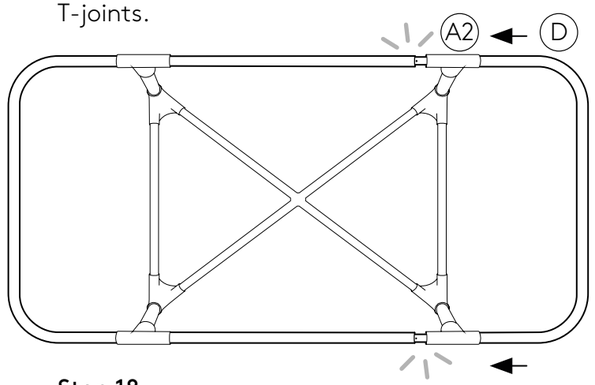

Step 17
Push buttons on each side of (D) C-Shaped Rail to click (E) Top Middle Rails into place.

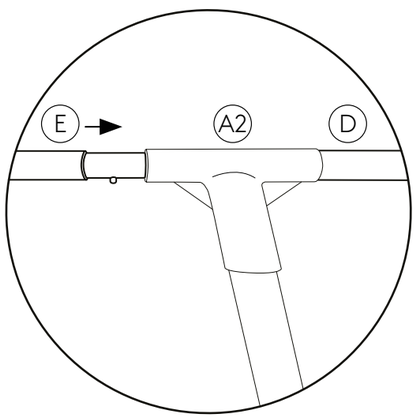

Step 18
Check to ensure all buttons have clicked through the holes in the top rail tubes.

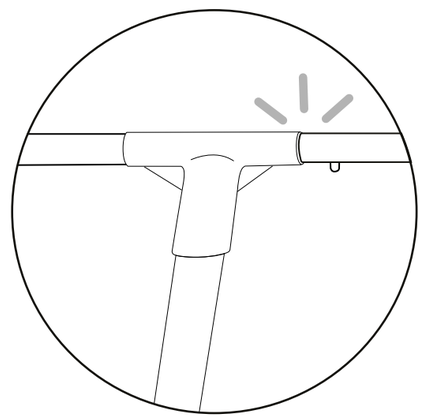

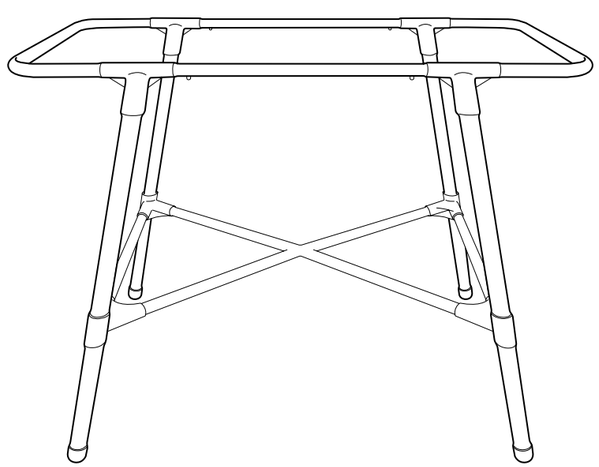

Fabric Cover & Motion Platform Assembly

Step 1
Drape (F) Fabric Cover over top frame and attach zippers on all 4 sides to attach (F) Fabric Cover to top rail.

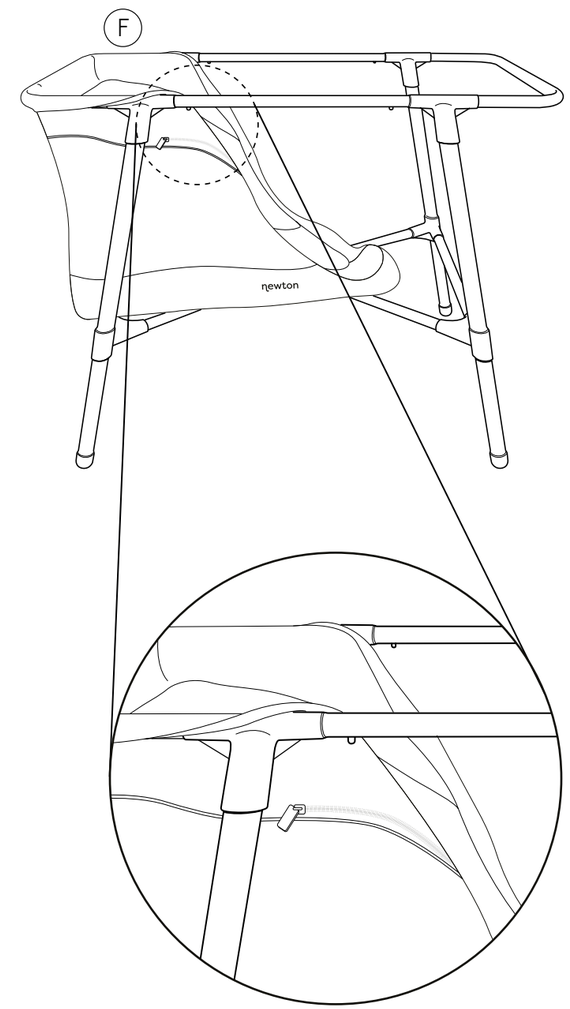

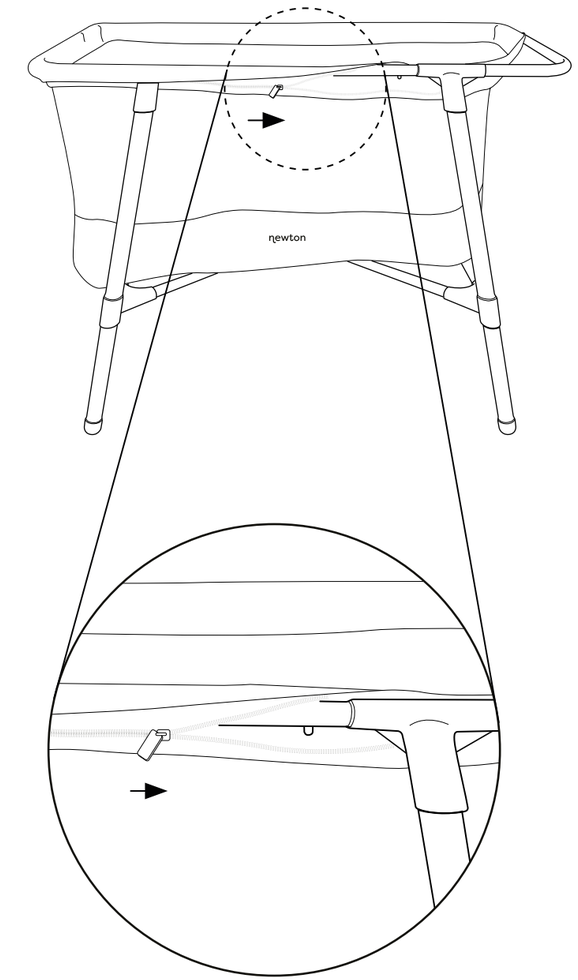

Step 2
Unzip all 4 sides of Motion Platform Cover from inside of sleep surface but do not fully release. Leave one edge connected and hang remaining fabric over top edge.

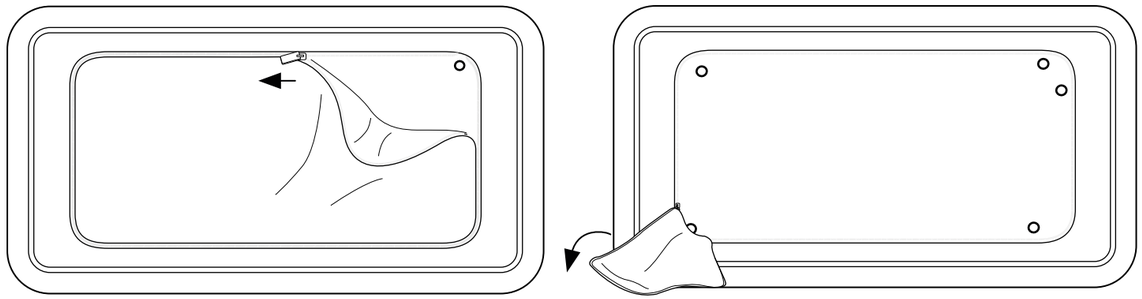

Step 3
There will be 4 open holes on the corners of the bottom cover. One side will have a 5th open hole along the short side. This is the location the (H) Cable Adapter cord will run through.

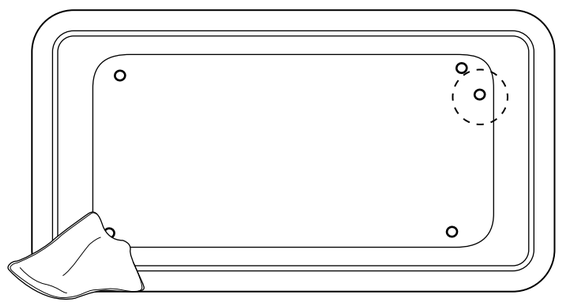

Step 4
On the same side as the cable adapter hole will be 3 printed icons for the On-Unit Controls. These icons are located on the outside of the (F) Fabric Cover. This is the side the (G) Motion Platform buttons and (H) Adapter Cable will be assembled on.

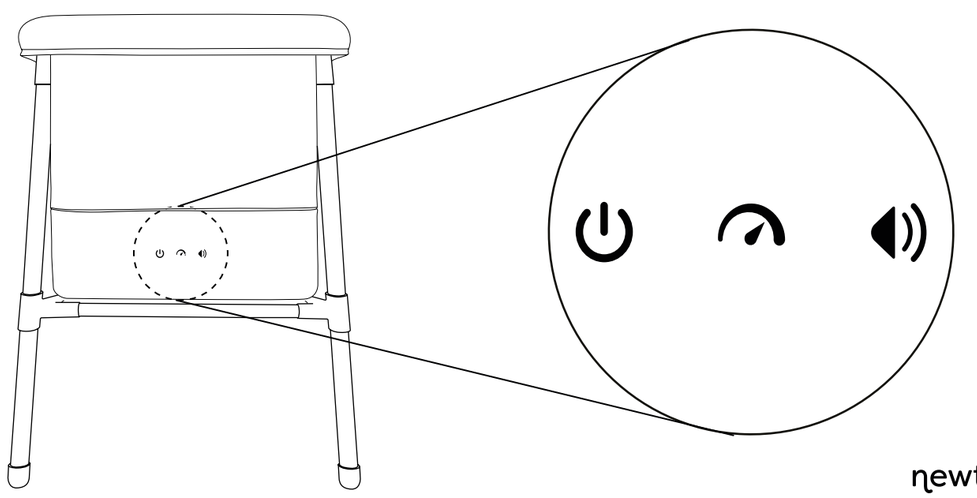

Step 5
Match the printed icon panel up with the On-Unit controls on the (G) Motion Platform (power, motion speed, sound) and rest the (G) Motion Platform on the bottom cover. The power button that sticks out furthest should be on the left. The cable hole should line up with the 5th open hole along the short side of the bottom cover.

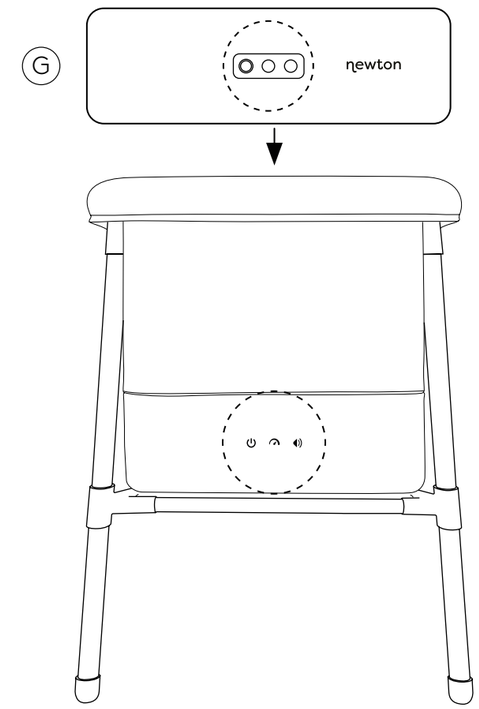

Step 6
Place the (G) Motion Platform into the bottom cover so that it rests on the lower frame.

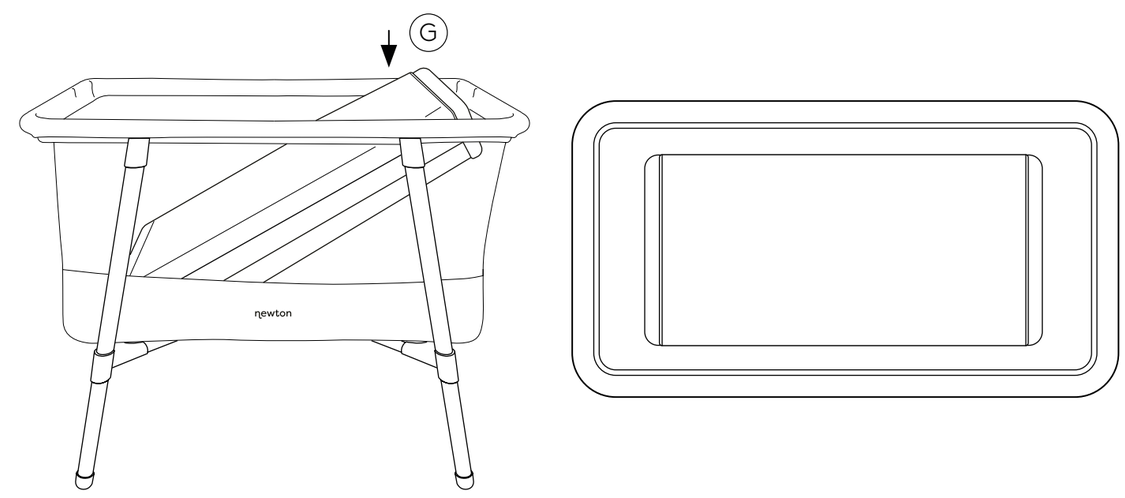

Step 7
Ensure all 4 open holes on the underside of the (F) Fabric Cover align with the 4 molded posts in the plastic (A1) Leg Joints of the bottom frame. When installed correctly, the bottom of the (F) Fabric Cover and (G) Motion Platform will lie flush on the crossbars.

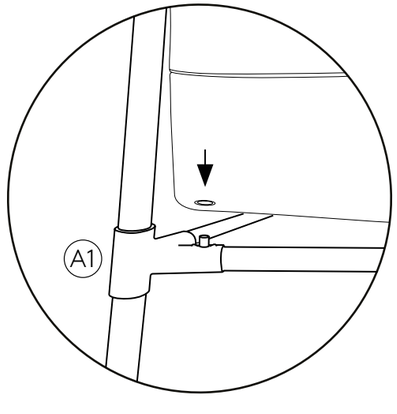

Step 8
Zip Motion Platform Cover over (G) Motion Platform. Upon initial assembly, remove protective covering on Velcro tabs. Velcro tabs create a pocket for the zipper tabs once closed.

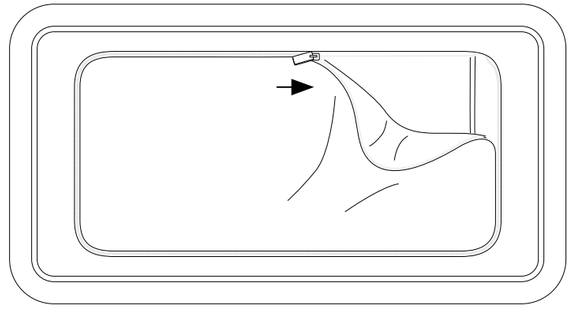

Step 9
Add (I) Mattress Pad with (J) Fitted Sheet attached over Fabric Cover.

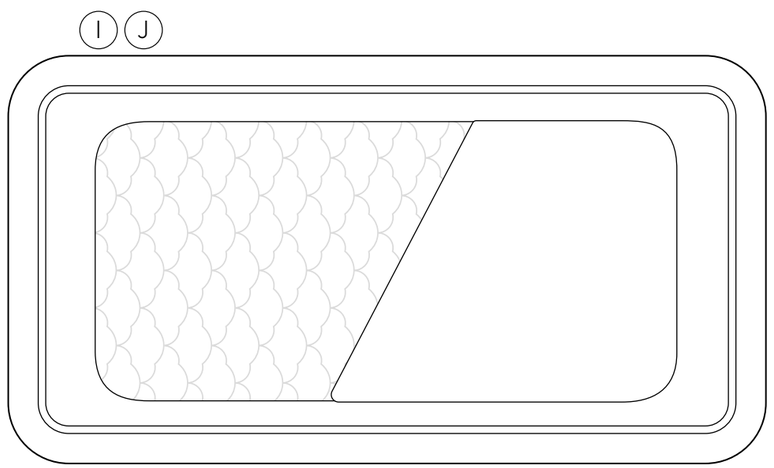

Step 10
Align (H) Cable Adapter with open hole in underside of (F) Fabric Cover. Push (H) Cable Adapter plug into place. Attach (H) Cable Adapter to wall outlet for power. The Newton SmartNest assembly is now complete.

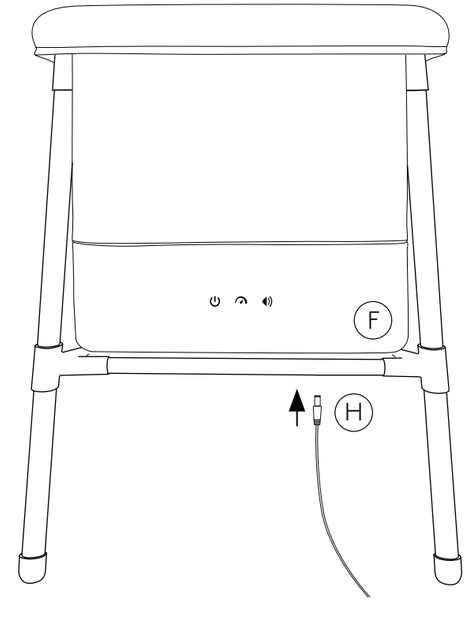

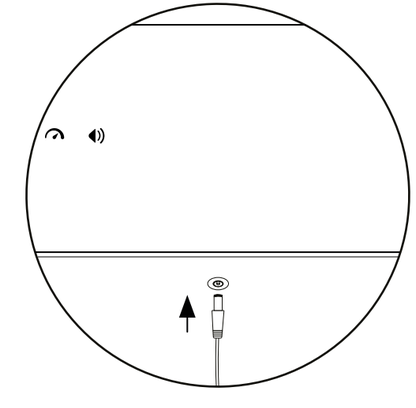

To Remove Fabric for Cleaning

Step 1
The (F) Fabric Cover is removable for cleaning. Remove (H) Cable Adapter cord from (G) Motion Platform.

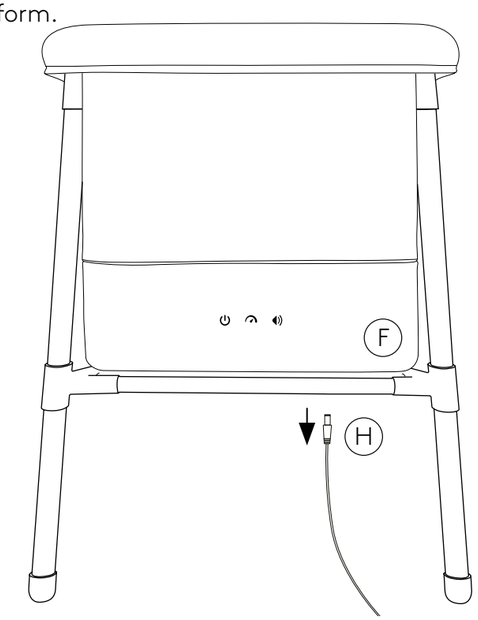

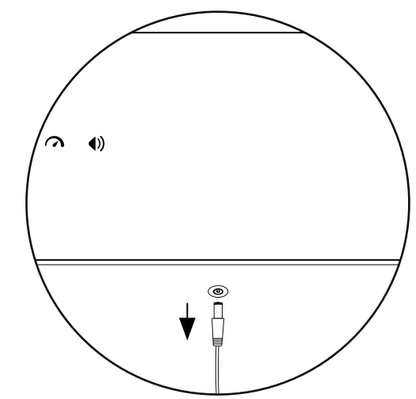

Step 2
Remove (I) Mattress Pad from base and remove (J) Fitted Sheet.

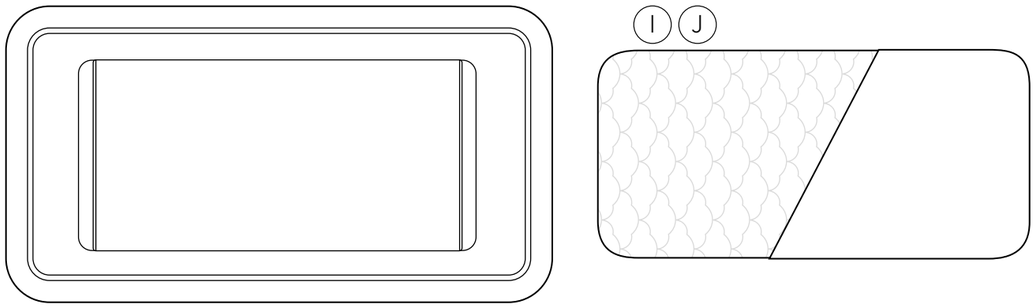

Step 3
Unzip Motion Platform Cover over (G) Motion Platform leaving a small portion still attached.

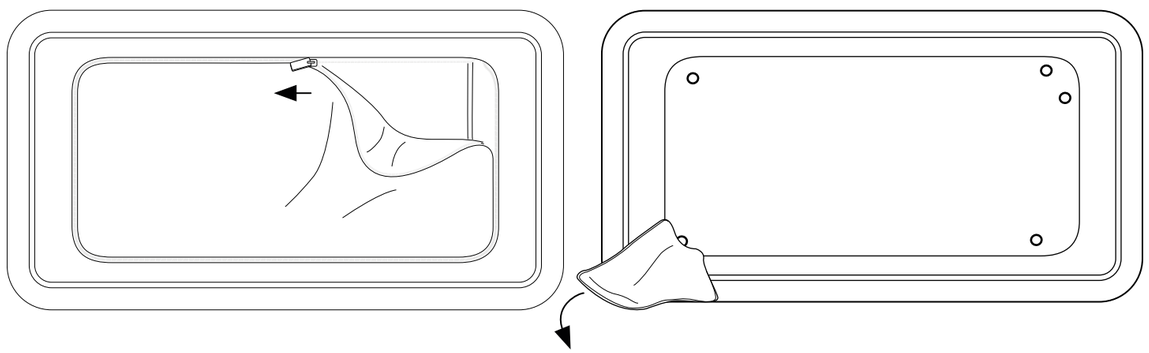

Step 4
Remove the (G) Motion Platform from the sleep surface.

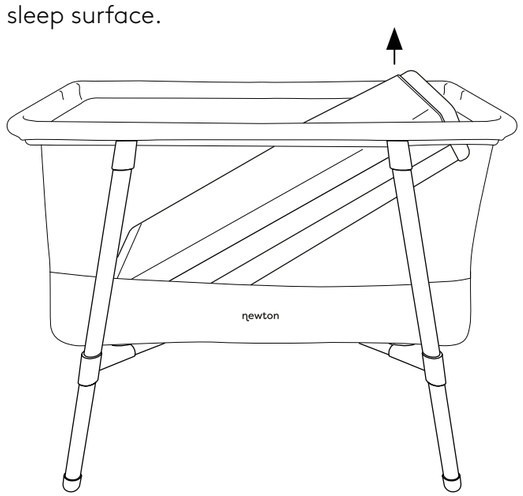

Step 5
Unattach zippers on all 4 sides of top rail to remove (F) Fabric Cover from frame.

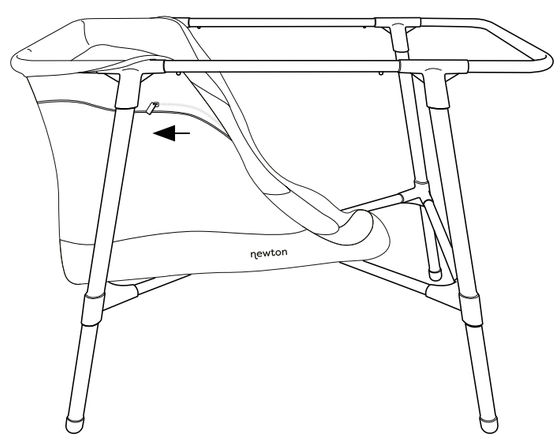

To Disassemble the SmartNest

Step 1
Push metal buttons on (D) C-Shaped Rail and pull out of (A2) Leg T-joints on both sides to remove from top frame.

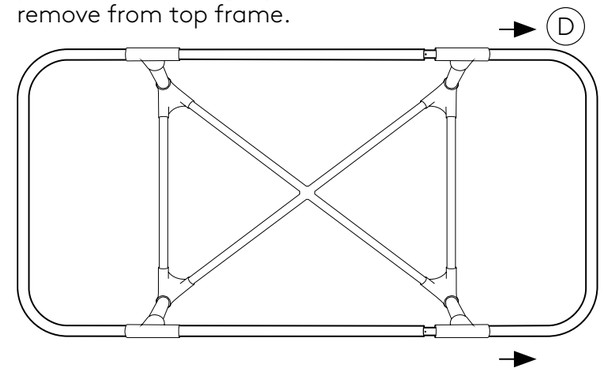

Step 2
Press metal buttons and pull out to release (E) Top Middle Rails from remaining (D) C-Shaped Rail.

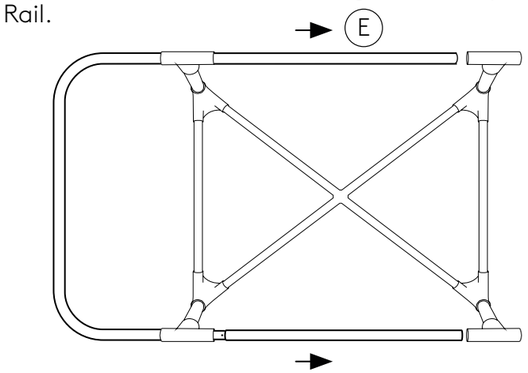

Step 3
Push metal buttons on (D) C-Shaped Rail and slide out of (A2) Leg T-joint.

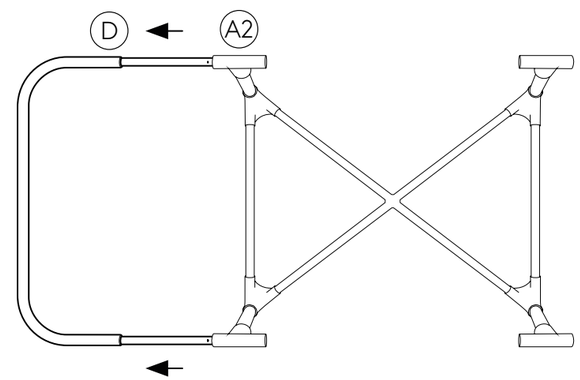

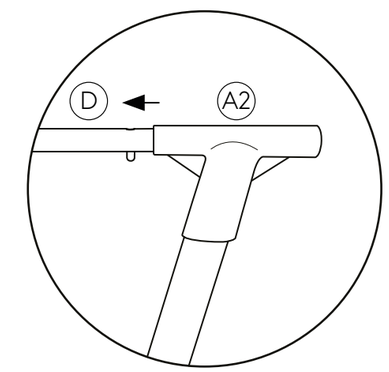

Step 4
Turn base frame over so (A) Legs are facing up and (A2) Leg T-joints are facing down.

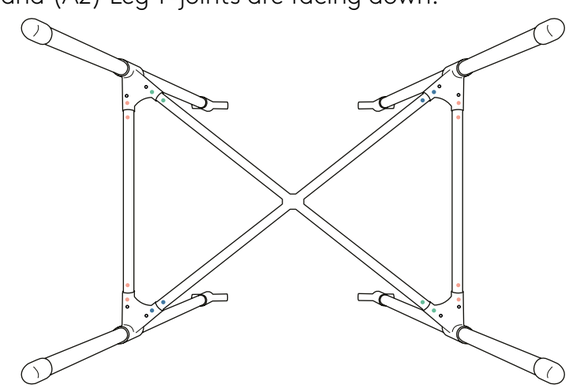

Step 5
Push metal button on (C) Crossbar and pull out from and (A1) Leg Joint. Push metal button on (B) Side Rail and pull out from (A1) Leg Joint. Repeat on all 4 sides until all parts are free from the (AL) Leg Joints.

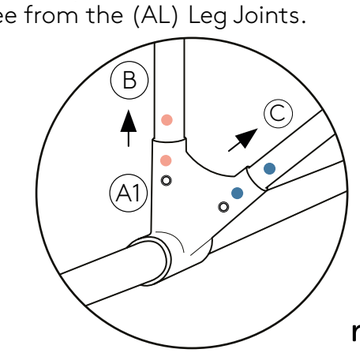

Care and Use

Washing the Sleep Surface Outer Fabric
Machine wash cold on gentle cycle and tumble dry low. Check the condition of the fabric for any possible damage after each wash. In case of damage, do not use the accessory.

Washing the Mattress Pad Cover, Sheet and Core
Remove fitted sheet, unzip pad to separate cover and core.
Fitted sheet: Machine wash cold. Tumble dry low.
Pad cover: Zip fully closed prior to wash and dry. Machine wash cold. Tumble dry low. Ensure zipper is fully closed with zipper pull securely tucked inside pocket before use.
Pad core: Hand rinse cold in shower or tub. Use mild detergent. Shake then air or fan dry. Avoid heat or direct sun.

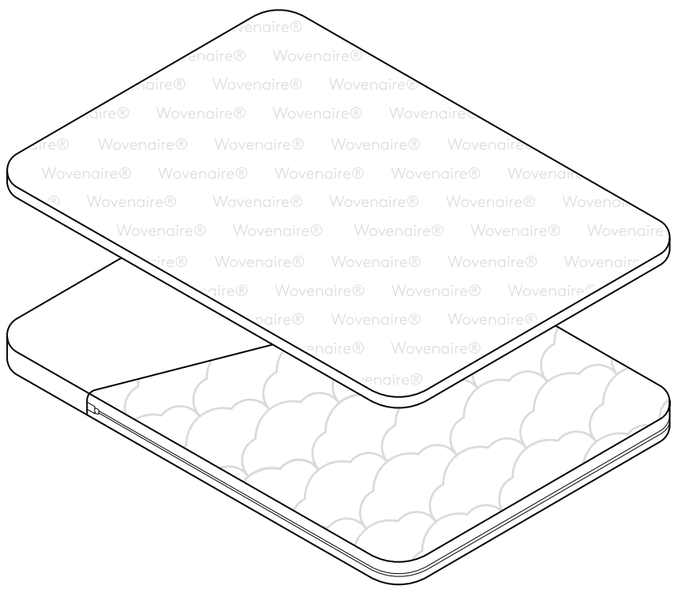

Protective Zipper Pull Pocket

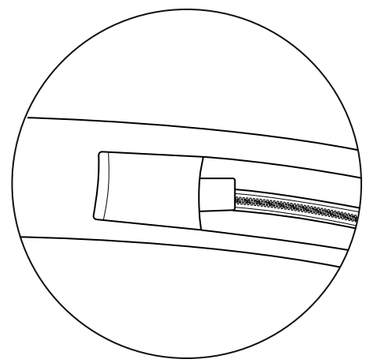

Cleaning the Frame and Motion Platform
Simply wipe clean with a damp cloth as needed.

Visit **newtonbaby.com/care** for more information

Connecting to the Newton App

Step 1
Download the Tuya App using the QR code below, or by searching "Tuya" in the App Store or Google Play. Select "Try as Guest" to browse and use most settings. In order to allow multi-connection between devices, select "Sign Up" and make an account.

GET IT ON Google Play

Download on the App Store

Step 2
Plug (H) Cable Adaptor into wall outlet.

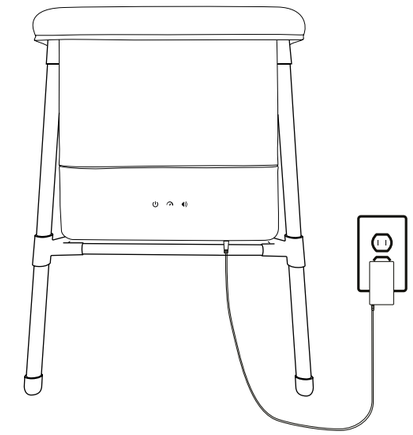

Step 3
Switch on Power Button by pressing On-Unit controls on (F) Fabric Cover. The Power Button will illuminate.

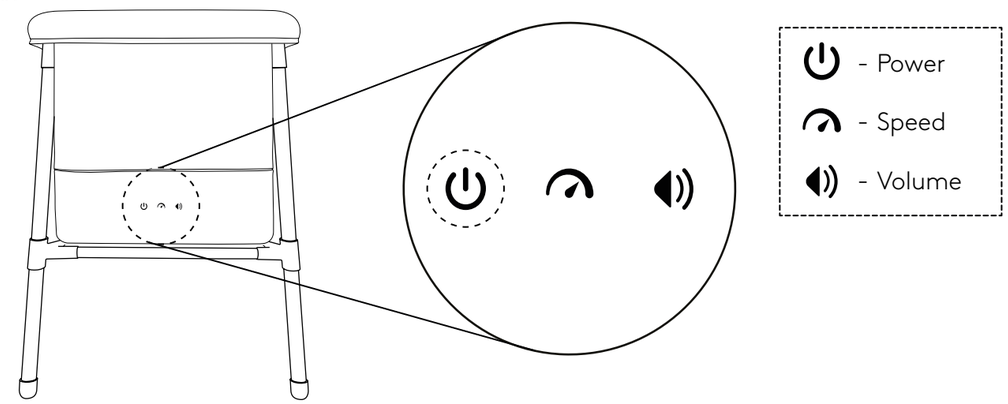

Step 4
Press and hold Speed and Volume Button at the same time for 3 seconds, by pressing On-Unit controls on (F) Fabric Cover. The SmartNest will now enter pairing mode and the underside lights will flash.

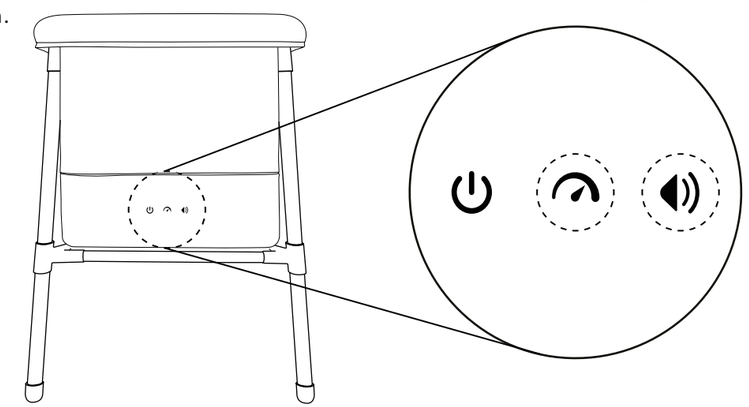

Step 5
Go to Tuya App and select "Add" when the Newton SmartNest appears. If the device does not appear, click the "+" button in the top right corner of the screen.

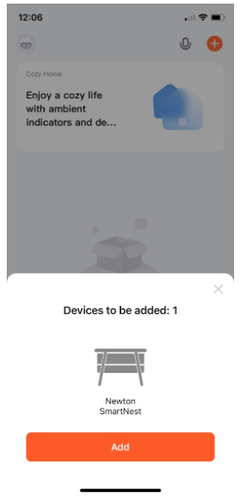

Step 6
Enter Wi-Fi name and password, ensuring this is the same Wi-Fi network that your phone is connected too. Select Next.

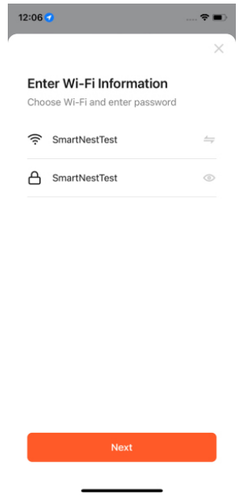

Step 7
Select Newton SmartNest to start using the in-app controls.

Using the Newton App

Smart Soothe Cycle
The first screen is your Smart Soothe Cycle. A pre-determined 10-minute cycle defined by the experts at Newton, simply press the play button to begin. Place your baby on the sleep surface on their back while the 10-minute cycle soothes baby to sleep.

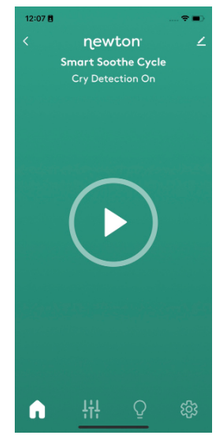

Ambiance
On this screen, turn the lighting on and off. Toggle the 5 brightness settings. Change the timer to determine how many hours the light should stay on for.

Motion & Sound
The next tab is for Motion & Sound control. To turn on motion or sound individually, navigate to this screen. In the sound section, select the preferred soundtrack, the Soothe Cycle and On-Unit Controls will remember the last set soundtrack and play when next activated. Use the sliders to toggle the 3 motion speed settings and 3 volume settings. See next

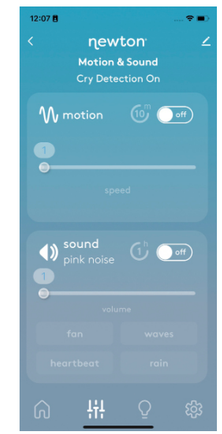

Settings
Turn Cry Detection On and Off, if Cry Detection is turned off, this will stop the product from automatically responding to baby's cries. Change High and Low Sensitivity to change how quickly the product will react to crying. Click Help & FAQs to access Newton's online support page.

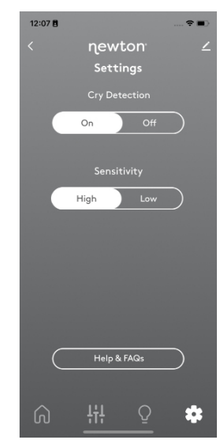

Timers

Motion & Sound

To set a timer on the Motion & Sound screen, turn either Motion or Sound on. Select the timer icon to navigate to the timer screen and set by clicking the tick button.

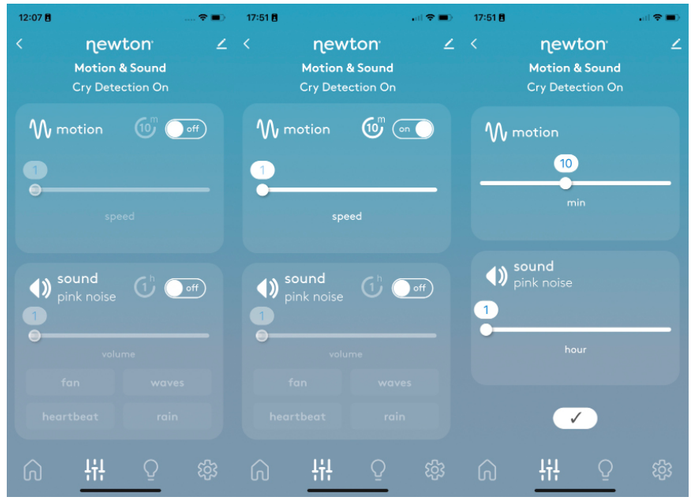

Pairing other Devices

Step 1

Navigate to the share icon top right of the Newton screens.

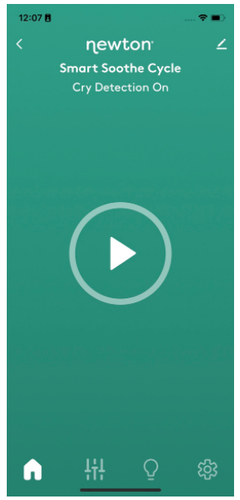

Step 2

Select "Share Device" and select the amount of users you'd like to share with [NOTE: the product can be paired with up to 5 devices]. Simply select the means of sharing and send the link.

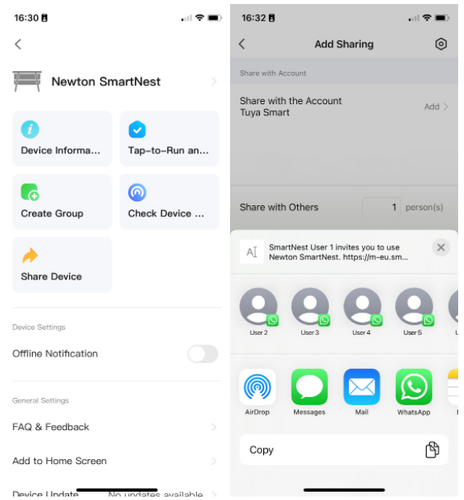

Step 3

The new user should click on the link sent and follow the instructions to Tuya Smart.

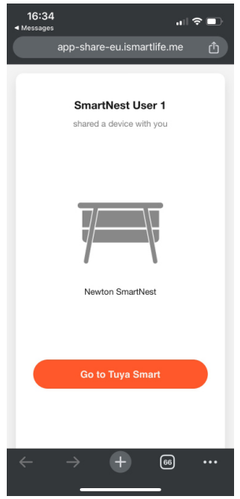

Step 4

Within the app, the new user should "Accept" the invitation and will now have access to the device controls.

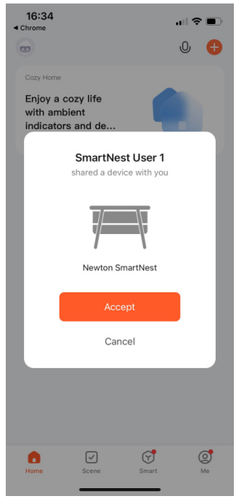

Using the On-Unit Controls

Step 1
Ensure product is turned on by pressing the Power Button.

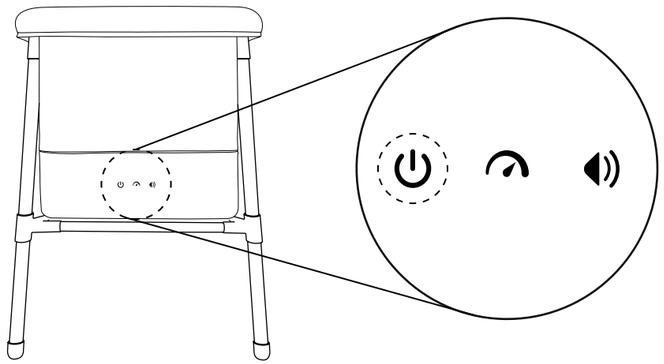

Step 2
Press the Motion Speed Button to cycle through the different speeds. The first press is low speed, the second press is mid speed, the third press is high speed and the forth press turns the motion off.

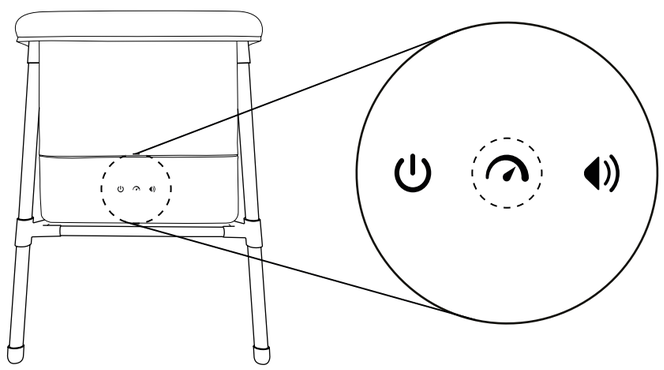

Motion Speed
1 - Low Speed
2 - Mid Speed
3 - High Speed
4 - Motion Off

Step 3
Press the Sound Volume Button to cycle through the different volume levels. The first press is low volume, the second press is mid volume, the third press is high volume and the forth press turns the sound off. Changing to a different sound must be performed in app on the Motion & Sound tab.

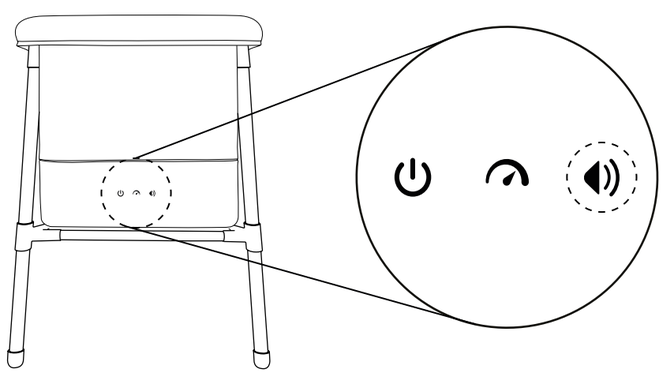

Sound Volume
1 - Low Volume
2 - Mid Volume
3 - High Volume
4 - Sound Off

Feature Set

Motion
A gentle soothing motion where the mattress lifts and lowers to soothe the baby to sleep. This movement resembles the movement a baby might experience if they were laying on a parent's chest, it resembles a parent inhaling and exhaling. Motion speed can be adjusted on unit or in app.

Sound
Soothing soundtracks can be played to accompany this movement. These are: pink noise, rain, waves, fan and heartbeat. Changing from one sound to another can only be done in app.

Lighting
Ambient orange lighting that down-lights below the crib, helping to guide the tired parent in the middle of the night to the physical controls. 5 adjustable brightness levels that can be adjusted in app.

Smart Soothe Cycle
If crying is detected, a smart soothe cycle will play for a 20-minute duration. This soothe cycle involves the smart bassinet motion and soundtrack which increase and decrease to mirror how much the baby is crying/being soothed.

Sensitivity Adjustments
Users can set sensitivity of the product (low or high sensitivity), to determine at what level of noise created from the baby and what length of time, before the soothe cycle begins.

Timers
Customization of motion, sound and lighting are available in app. Motion timer is up to 10 minutes. Sound and lighting are up to 10 hours.

newton®

382 NE 191st Street
Miami, FL 33179

www.newtonbaby.com
info@newtonbaby.com
800-686-3986