M8048H

Bluetooth module/SOC application software development

Versions: 0.0.1

2021/05/14

Declaration

Copyright © 2021, www. Brandsound.com.

All Rights Reserved. No Unauthorized Distribution.

Brandsound reserves the right to make changes without further notice to any products herein to improve reliability, function or design.

For further information on the technology, product and business term, please contact Brandsound Company.
For sales or technical support, please send email to the address:

Sales: sales@Brandsound.com

Technical: project@Brandsound.com

Revision History

Date	Version	Comments	Revised by
2021-05-14	0.0.1	First draft	Guo

Table of Contents

TABLE OF CONTENTS.....3

1 PRODUCT FEATURES.....4

2 PACKAGE DEFINITION.....5

2.1 PIN ASSIGNMENT.....5
2.2 PIN DESCRIPTIONS.....6

3 CHARACTERISTICS.....11

3.1 PMU PARAMETERS.....11
3.2 IO PARAMETERS.....11
3.3 AUDIO DAC PARAMETERS.....11
3.4 AUDIO ADC PARAMETERS.....12
3.5 BT PARAMETERS.....12
3.6 CURRENT PARAMETERS.....12

4 PACKAGE INFORMATION.....14

Copyright © 2021, www. Brandsound.com. All Rights Reserved

1 Product Features

CPU and Flexible IO

- 32bit High performance CPU with DSP instruction
- Program memory: internal 8M bit flash
- Flexible GPIO pins with Programmable pull-up and pull-down resistors;
- Support GPIO wakeup or interrupt;

Bluetooth Radio

- Compliant to Bluetooth 5.4 and BLE specification (QDID: 194248);
- TX output power +2dBm in typical;
- RX Sensitivity with -90.5dBm @Basic Rate;

FM Tuner

- Support frequency band 76~108MHz;
- Auto search tuning;
- Programable de-emphasis(50/75uS);
- Receive signal strength indicator (RSSI);

Audio Interface

- Audio codec with 16bit stereo DAC and two channel 16bit ADC;
- Support flexible audio EQ adjust;
- Support Sample rate 8, 11.025, 12, 16, 22.05, 32, 44.1 and 48KHz;
- 4 channel Stereo Analog MUX;
- Two channel MIC amplifier input;
- High performance Stereo audio ADC with 90dB SNR;
- High performance Stereo audio DAC with 95dB SNR, with headphone amplifier output;

Peripheral and Interfaces

- Three 32-bit timers;
- Three multi-function 32-bit timers, support Capture and PWM mode;
- WatchDog;
- Three full-duplex UART;
- Two SPI;
- IR controller;
- SD Card Host controller;
- SPDIF receiver;
- Audio interface IIS;
- Full speed USB 2.0 HOST/DEVICE controller;
- Sixteen Channels 10-bit SARADC;
- Integrate IRTC;
- Build in PMU, such as charger/buck/LDO;

Package

- QFN48;

Temperature

- Operating temperature: -40℃ to +85℃;
- Storage temperature: -65℃ to +150℃;

Copyright © 2021, www. Brandsound.com. All Rights Reserved

2 Package Definition

2.1 Pin Assignment

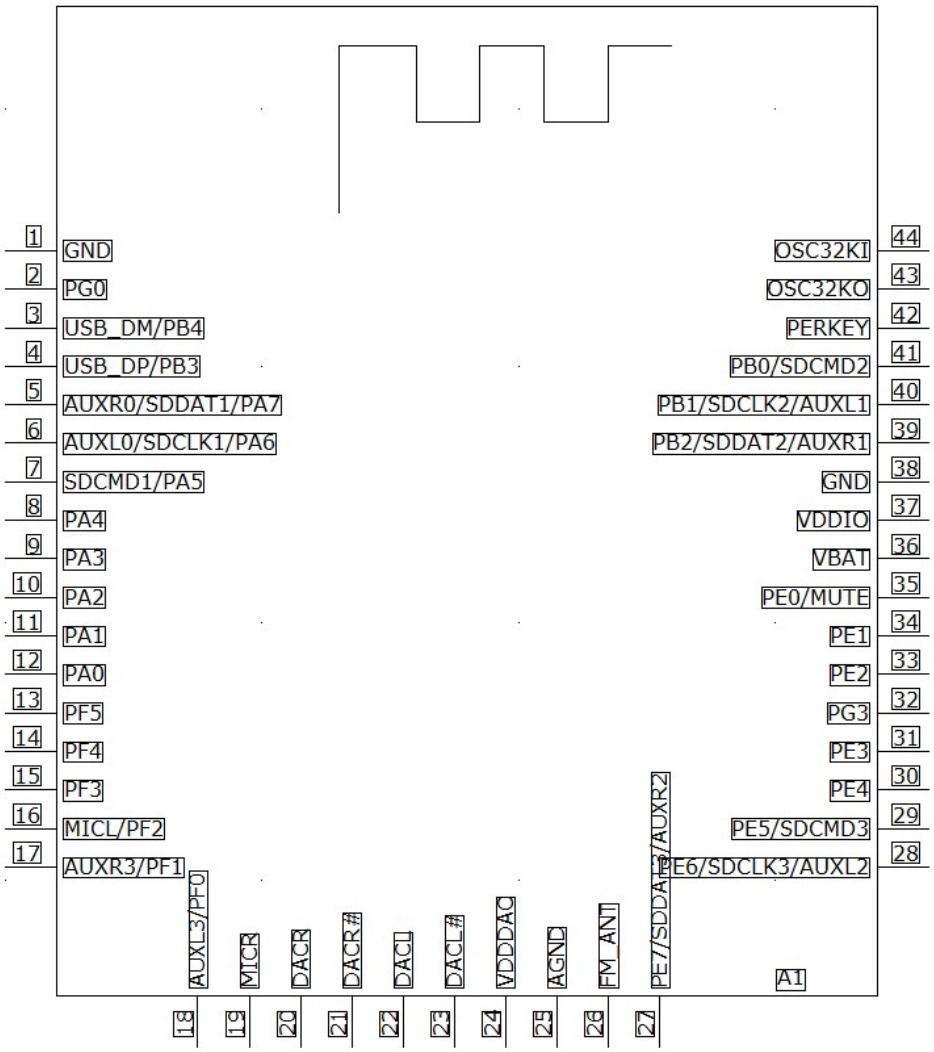

Figure 2-1 Pin assignment for M44

Copyright © 2021, www.Brandsound.com. All Rights Reserved

2.2 Pin Descriptions

Table 2-1 M44 pin description

Pin No.	Name	Type	Function
1	GND	GND	GND
2	PG0	I/O	PG0 SPI0WP-G1 SPI4W_DIO2
3	PB4	I/O	USB_DM PB4 ADC6 SDDAT0-G4/G6 SPI0CLK-G3 RX0-G3 HSTRX-G8 LPWM1-G2
4	PB3	I/O	USB_DP PB3 SDDAT0-G5 SDCMD-G6 SPI0DO-G3 TX0-G3 HSTRX-G3 LPWM0-G2 ADC5
5	PA7	I/O	AUXR0 SDDAT1 PA7 SDDAT0-G1 SPI1DO-G2 SPI1DATA-G2 TX0-G1 TX1-G1 HSTRX-G1 PWM2-T4 ADC2
6	PA6	I/O	AUXL0 SDCLK1 PA6 SDCLK-G1 SPI1CLK-G2 RX0-G1 RX1-G1 HSTRX-G6 FMOSC-G2 PWM1-T4 TMR3CAP_G2/IR_G2 ADC1

Copyright © 2021, www. Brandsound.com. All Rights Reserved

7	PA5	I/O	ADC0 SDCMD-G1 SPI1DI-G2 FMOSC-G1 PWM0-T4 TMR3CAP_G1/IR_G1 PA5
8	PA4	I/O	SPI1DO-G1 TX1-G2 IISMCLK-G1 PA4
9	PA3	I/O	SDDAT2-G1 SPI1CLK-G1 RX1-G2 LPWM3-G3 IISLRCLK-G1 PA3
10	PA2	I/O	SDDAT3-G1 SPI1DI-G1 LPWM2-G3 IISSCLK-G1 PA2
11	PA1	I/O	SPDIF1 SPI1CLK-G1 TX0-G5 HSTRX-G5 LPWM1-G3 IISDO-G1 PA1
12	PA0	I/O	SPDIF0 RX0-G5 HSTRX-G10 LPWM0-G3 IISDI-G1 PA0
13	PF5	I/O	PF5
14	PF4	I/O	PF4
15	PF3	I/O	PF3
16	PF2	I/O	ADC10 MICL SPDIF5 SPI1DO-G5 SPI1DATA-G5 TX0-G7 LPWM3-G2 PF2
17	PF1	I/O	AUXR3 SPI1CLK-G5 PF1
18	PF0	I/O	AUXL3 SPI1DI-G5 PF0
19	MICR	A	MICR
20	DACR	A	DACR

Copyright © 2021, www. Brandsound.com. All Rights Reserved

21	DACR#	A	DAC differential R#
22	DACL	A	DACL
23	DACL#	A	DAC differential L#
24	VDDDAC	PWR	DAC POWER
25	AGND	GND	DAC GROUND
26	FM_ANT	A	FMRX ANT
27	PE7	I/O	ADC9 AUXR2 SDDAT0-G3 SPI1DO-G4 SPI1DATA-G4 TX0-G4 HSTRX-G4 LPWM3-G1 TMR4CAP_G1/IR_G8 PE7
28	PE6	I/O	ADC8 AUXL2 SPDIF4 SDCLK-G3 SPI1CLK-G4 RX0-G4 HSTRX-G9 FMOSC-G6 LPWM2-G1 TMR3CAP_G7/IR_G7 PE6
29	PE5	I/O	ADC7 SPDIF3 SDCMD-G3 SPI1DI-G4 FMOSC-G5 LPWM1-G1 TMR3CAP_G6/IR_G6 PE5
30	PE4	I/O	SPI0DIIN-G2 SPI1DI-G6 LPWM0-G1 IISMCLK-G2 PE4
31	PE3	I/O	SPI0CLK-G2 SPI1CLK-G6 TX2-G1 PWM2-T5 IISLRCLK-G2

Copyright © 2021, www. Brandsound.com. All Rights Reserved

32	PG3	I/O	SPI0HOLD-G1 SPI4W_DIO3 PG3
33	PE2	I/O	PE2 SPI0DO-G2 SPI1DO-G6 RX2-G1 PWM1-T5 IISSCLK-G2
34	PE1	I/O	SPIOCS-G2 RX0-G6 PWM0-T5 IISDO-G2 PE1
35	PE0	I/O	MUTE SPI0DI-G3 TX0-G6 LPWM2-G2 IISDI-G2 TMR3CAP_G5/IR_G5 PE0
36	VBAT	PWR	VBAT power input
37	VDDIO	PWR	VDDIO power output
38	GND	GND	GND
39	PB2	I/O	ADC4 AUXR1 SDDAT0-G2 SPI1DO-G3 SPI1DATA-G3 TX0-G2 TX2-G2 HSTRX-G2 PWM2-T3 PB2
40	PB1	I/O	ADC3 FM/AM-CH1 AUXL1 SDCLK-G2 SPI1CLK-G3 RX0-G2 RX2-G2 HSTRX-G7 FMOSC-G4 PWM1-T3 TMR3CAP_G4/IR_G4 PB1

Copyright © 2021, www. Brandsound.com. All Rights Reserved

41	PB0	I/O	FM/AM-CH0 SPDIF2 SDCMD-G2 SPI1DI-G3 FMOSC-G3 PWM0-T3 TMR3CAP_G3/IR_G3 PB0
42	PWRKEY	A	Power key input
43	OSC32KO	A	32K OSC output
44	OSC32KI	A	32K OSC input

Note: I/O: Digital input/output; I : Digital input; A : Analog Pin; PWR: Power Pin; GND: Ground.

Copyright © 2021, www. Brandsound.com. All Rights Reserved

3 Characteristics

3.1 PMU Parameters

Table 3-1 PMU voltage input Parameters

Sym	Characteristics	Min	Typ	Max	Unit	Conditions
VUSB	Charger Voltage input	3.0	5.0	5.5	V	
VBAT	Voltage input	3.0	3.7	5.0	V	

Table 3-2 3.3V LDO Parameters

Sym	Characteristics	Min	Typ	Max	Unit	Conditions
VDDIO	3.3V LDO voltage output	-	3.3	-	V	Light Loading condition
△VVDDIO	Output Mismatch 1-sigma	-	56	-	mV	VDDIO=3.3v
ILOAD	Maximum output current	-	-	150	mA	@VBAT=3.6v
ISC	Short Circuit Current Limit	-	-	300	mA	@VBAT=3.8v

Table 3-3 1.6V LDO Parameters

Sym	Characteristics	Min	Typ	Max	Unit	Conditions
VDDBT	1.6V LDO voltage output	-	1.6	-	V	Light Loading condition
△VVDDBT	Output Mismatch 1-sigma	-	27	-	mV	VDDBT=1.6v
ILOAD	Maximum output current	-	-	100	mA	@VBAT=3.0v
ISC	Short Circuit Current Limit	-	-	200	mA	@VBAT=3.8v

3.2 IO Parameters

Table 3-4 I/O Parameters

GPIO—Electrical Characteristics							
Symbol	Description	Related GPIO	Min	Typical	Max	Units	Conditions
V_{IL}	Low-level input voltage		-0.3		1.27	V	VDDIO=3.3V
V_{IH}	High-level input voltage		2.03		3.6	V	VDDIO=3.3V
Driver Ability 1	Output Driver Ability 1			32		mA	VDDIO=3.3V
Driver Ability 0	Output Driver Ability 0			8		mA	VDDIO=3.3V
R_{PUP0}	Internal pull-up resister 0		8	10	12	KΩ	
R_{PUP1}	Internal pull-up resister 1		0.24	0.3	0.36	KΩ	
R_{PUP2}	Internal pull-up resister 2		160	200	240	KΩ	
R_{PDN0}	Internal pull-down resister 0		8	10	12	KΩ	
R_{PDN1}	Internal pull-down resister 1		0.24	0.3	0.36	KΩ	
R_{PDN2}	Internal pull-down resister 2		160	200	240	KΩ	

3.3 Audio DAC Parameters

Table 3-5 Audio DAC Parameters

Sym	Characteristics	Min	Typ	Max	Unit	Conditions
SNR		-	96	-	dB	VCM cap=1uF

Copyright © 2021, www. Brandsound.com. All Rights Reserved

Sym	Characteristics	Min	Typ	Max	Unit	Conditions
						VDDDAC cap=1uF with A-wt filter Output -3dBV Fin=1KHz
THD+N		-	-86	-	dB	VCM cap=1uF VDDDAC cap=1uF with A-wt filter Output -3dBV with 10K loading Fin=1KHz
Output Range	Maximum output voltage	-	2.6		$V_{peak-peak}$	32ohm Loading

3.4 Audio ADC Parameters

Table 3-6 Audio ADC Parameters

Sym	Characteristics	Min	Typ	Max	Unit	Conditions
SNR		-	90	-	dB	VCM cap=1uF VDDDAC cap=1uF with A-wt filter Input sine amplitude, 850mV RMS Fin=1KHz
THD+N		-	-87	-	dB	VCM cap=1uF VDDDAC cap=1uF with A-wt filter Input sine amplitude, 850mV RMS Fin=1KHz.
Input Range	Input sine wave peak amplitude	0		VCM	V	From aux input, aux 0db gain, VCM represent VCM voltage.

3.5 BT Parameters

Table 3-7 BT Parameters

Characteristics	Min	Typical	Max	Unit	Conditions
Maximum Transmit Power	-	-	2	dBm	
RMS DEVM	-	5.5	-	%	Maximum TX power 2-DH5 packet
Peak DEVM	-	12.5		%	
EDR Relative Transmit Power		-0.2		dB	
Sensitivity @ Basic Rate		-90.5		dBm	BER=0.1%, using DH5 packet
Sensitivity @ EDR		-89.5		dBm	BER=0.01%, using 2-DH5 packet

3.6 Current Parameters

Table 3-8 Current Parameters

Copyright © 2021, www. Brandsound.com. All Rights Reserved

Sym	Characteristics	Min	Typ	Max	Unit	Conditions
IRTC	RTC mode current	-	4	-	uA	4.2V input, room temp.
Sleep	Sleep current	-	500	2000	uA	3.3V input, room temp

Copyright © 2021, www. Brandsound.com. All Rights Reserved

4 Package Information

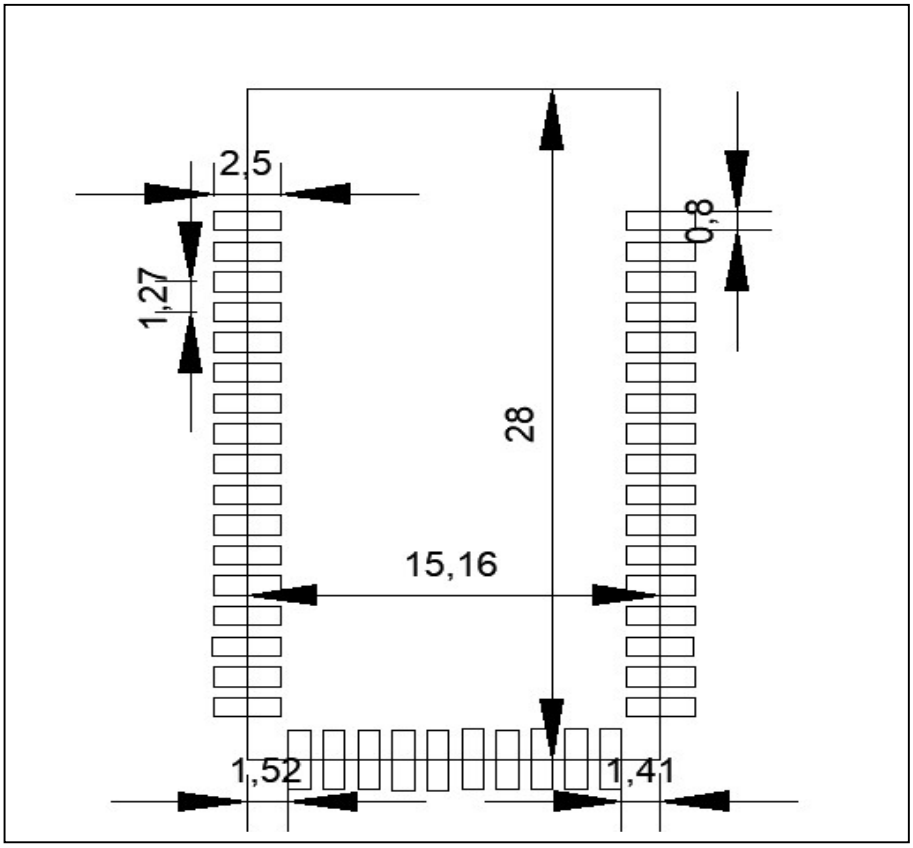

Copyright © 2021, www. Brandsound.com. All Rights Reserved

Requirement per KDB996369 D03

2.2 List of applicable FCC rules

List the FCC rules that are applicable to the modular transmitter. These are the rules that specifically establish the bands of operation, the power, spurious emissions, and operating fundamental frequencies. DO NOT list compliance to unintentional-radiator rules (Part 15 Subpart B) since that is not a condition of a module grant that is extended to a host manufacturer. See also Section 2.10 below concerning the need to notify host manufacturers that further testing is required.3

Explanation: This module meets the requirements of FCC part 15C(15.247).it specifically establish the 6dB Bandwidth, Peak Output Power, Radiated Spurious Emission, Power Spectral Density, Restricted Band of Operation and Band Edge (Out of Band Emissions)

2.3 Summarize the specific operational use conditions

Describe use conditions that are applicable to the modular transmitter, including for example any limits on antennas, etc. For example, if point-to-point antennas are used that require reduction in power or compensation for cable loss, then this information must be in the instructions. If the use condition limitations extend to professional users, then instructions must state that this information also extends to the host manufacturer's instruction manual. In addition, certain information may also be needed, such as peak gain per frequency band and minimum gain, specifically for master devices in 5 GHz DFS bands.

Explanation: The module has one **PCB antenna**, the antenna cannot be removed.

2.4 Limited module procedures

If a modular transmitter is approved as a "limited module," then the module manufacturer is responsible for approving the host environment that the limited module is used with. The manufacturer of a limited module must describe, both in the filing and in the installation instructions, the alternative means that the limited module manufacturer uses to verify that the host meets the necessary requirements to satisfy the module limiting conditions.

A limited module manufacturer has the flexibility to define its alternative method to address the conditions that limit the initial approval, such as: shielding, minimum signaling amplitude, buffered modulation/data inputs, or power supply regulation. The alternative method could include that the limited module manufacturer reviews detailed test data or host designs prior to giving the host manufacturer approval.

This limited module procedure is also applicable for RF exposure evaluation when it is necessary to demonstrate compliance in a specific host. The module manufacturer must state how control of the product into which the modular transmitter will be installed will be maintained such that full compliance of the product is always ensured. For additional hosts other than the specific host originally granted with a limited module, a Class II permissive change is required on the module grant to register the additional host as a specific host also approved with the module.

Explanation: The module is a limited single module. But there is no shield shell, it can be tested independently.

2.5 Trace antenna designs

For a modular transmitter with trace antenna designs, see the guidance in Question 11 of KDB Publication 996369 D02 FAQ – Modules for Micro-Strip Antennas and traces. The integration information shall include for the TCB review the integration instructions for the following aspects: layout of trace design, parts list (BOM), antenna, connectors, and isolation requirements.

a) Information that includes permitted variances (e.g., trace boundary limits, thickness, length, width, shape(s), dielectric constant, and impedance as applicable for each type of antenna);

b) Each design shall be considered a different type (e.g., antenna length in multiple(s) of frequency, the wavelength, and antenna shape (traces in phase) can affect antenna gain and must be considered);

c) The parameters shall be provided in a manner permitting host manufacturers to design the printed circuit (PC) board layout;

d) Appropriate parts by manufacturer and specifications;

e) Test procedures for design verification; and

f) Production test procedures for ensuring compliance.

The module grantee shall provide a notice that any deviation(s) from the defined parameters of the antenna trace, as described by the instructions, require that the host product manufacturer must notify the module grantee that they wish to change the antenna trace design. In this case, a Class II permissive change application is required to be filed by the grantee, or the host manufacturer can take responsibility through the change in FCC ID (new application) procedure followed by a Class II permissive change application.

Explanation: Yes, The module is PCB antenna designs, the antenna cannot be removed. See antenna report for antenna details.

2.6 RF exposure considerations

It is essential for module grantees to clearly and explicitly state the RF exposure conditions that permit a host product manufacturer to use the module. Two types of instructions are required for RF exposure information: (1) to the host product manufacturer, to define the application conditions (mobile, portable – xx cm from a person's body); and (2) additional text needed for the host product manufacturer to provide to end users in their end-product manuals. If RF exposure statements and use conditions are not provided, then the host product manufacturer is required to take responsibility of the module through a change in FCC ID (new application).

Explanation: This module complies with FCC RF radiation exposure limits set forth for an uncontrolled environment, this equipment should be installed and operated with a minimum distance of 20 centimeters between the radiator and your body." This module is designed to comply with the FCC statement, FCC ID: **2BFB8-M8048H.**

2.7 Antennas

A list of antennas included in the application for certification must be provided in the instructions. For modular transmitters approved as limited modules, all applicable professional installer instructions must be included as part of the information to the host product manufacturer. The antenna list shall also identify the antenna types (monopole, PIFA, dipole, etc. (note that for example an "omni-directional antenna" is not considered to be a specific "antenna type")).

For situations where the host product manufacturer is responsible for an external connector, for example

with an RF pin and antenna trace design, the integration instructions shall inform the installer that unique antenna connector must be used on the Part 15 authorized transmitters used in the host product. The module manufacturers shall provide a list of acceptable unique connectors.

Explanation: The EUT has one **PCB Antenna**, the antenna cannot be removed.

2.8 Label and compliance information

Grantees are responsible for the continued compliance of their modules to the FCC rules. This includes advising host product manufacturers that they need to provide a physical or e-label stating “Contains FCC ID” with their finished product. See Guidelines for Labeling and User Information for RF Devices – KDB Publication 784748.

Explanation: The host system using this module, should have label in a visible area indicated the following texts: Contains FCC ID: **2BFB8-M8048H**

2.9 Information on test modes and additional testing requirements5

Additional guidance for testing host products is given in KDB Publication 996369 D04 Module Integration Guide. Test modes should take into consideration different operational conditions for a stand-alone modular transmitter in a host, as well as for multiple simultaneously transmitting modules or other transmitters in a host product.

The grantee should provide information on how to configure test modes for host product evaluation for different operational conditions for a stand-alone modular transmitter in a host, versus with multiple, simultaneously transmitting modules or other transmitters in a host. Grantees can increase the utility of their modular transmitters by providing special means, modes, or instructions that simulates or characterizes a connection by enabling a transmitter. This can greatly simplify a host manufacturer’s determination that a module as installed in a host complies with FCC requirements.

Explanation: BT Module can increase the utility of our modular transmitters by providing instructions that simulates or characterizes a connection by enabling a transmitter.

2.10 Additional testing, Part 15 Subpart B disclaimer

The grantee should include a statement that the modular transmitter is only FCC authorized for the specific rule parts (i.e., FCC transmitter rules) listed on the grant, and that the host product manufacturer is responsible for compliance to any other FCC rules that apply to the host not covered by the modular transmitter grant of certification. If the grantee markets their product as being Part 15 Subpart B compliant (when it also contains unintentional-radiator digital circuity), then the grantee shall provide a notice stating that the final host product still requires Part 15 Subpart B compliance testing with the modular transmitter installed.

Explanation: The module without unintentional-radiator digital circuity, so the module does not require an evaluation by FCC Part 15 Subpart B. The host shoule be evaluated by the FCC Subpart B.

Module with no shield Class II Permissive Change (C2PC)

Test plan:

(1) Conducted Emission

(2) Radiated Spurious Emission.

(3) Output Power.

(4) Restricted Band of Operation

Note: These tests be based on C63.10 and FCC Part15.247 as guidance, according to the operating frequency High, medium and low channel test.

OEM integration instructions:

This device is intended only for OEM integrators under the following conditions:

The transmitter module may not be co-located with any other transmitter or antenna. This module can only use the PCB antenna designed by ourselves.

As long as the conditions above are met, further transmitter test will not be required. However, the OEM integrator is still responsible for testing their end-product for any additional compliance requirements required with this module installed (for example, digital device emissions, PC peripheral requirements, etc.).

Validity of using the module certification:

In the event that these conditions cannot be met (for example certain laptop configurations or co-location with another transmitter), then the FCC authorization for this module in combination with the host equipment is no longer considered valid and the FCC ID of the module cannot be used on the final product. In these circumstances, the OEM integrator will be responsible for re-evaluating the end product (including the transmitter) and obtaining a separate FCC authorization.

End product labeling:

The final end product must be labeled in a visible area with the following: "Contains Transmitter Module FCC ID: 2BFB8-M8048H".

Information that must be placed in the end user manual:

The OEM integrator has to be aware not to provide information to the end user regarding how to install or remove this RF module in the user's manual of the end product which integrates this module. The end user manual shall include all required regulatory information/warning as show in this manual.

FCC Caution：

This device complies with part 15 of the FCC Rules. Operation is subject to the following two conditions: (1) This device may not cause harmful interference, and (2) this device must accept any interference received, including interference that may cause undesired operation.

Any Changes or modifications not expressly approved by the party responsible for compliance could void the user's authority to operate the equipment.

Note: This equipment has been tested and found to comply with the limits for a Class B digital device, pursuant to part 15 of the FCC Rules. These limits are designed to provide reasonable protection against harmful interference in a residential installation. This equipment generates uses and can radiate radio frequency energy and, if not installed and used in accordance with the instructions, may cause harmful interference to radio communications. However, there is no guarantee that interference will not occur in a particular installation. If this equipment does cause harmful interference to radio or television reception, which can be determined by turning the equipment off and on, the user is encouraged to try to correct the interference by one or more of the following measures:

-Reorient or relocate the receiving antenna.

-Increase the separation between the equipment and receiver.

-Connect the equipment into an outlet on a circuit different from that to which the receiver is connected.

-Consult the dealer or an experienced radio/TV technician for help.

The device has been evaluated to meet general RF exposure requirement. The device can be used in portable exposure condition without restriction.