Dash Camera

User Manual

1. product overview (picture for reference only,mainly in kind)

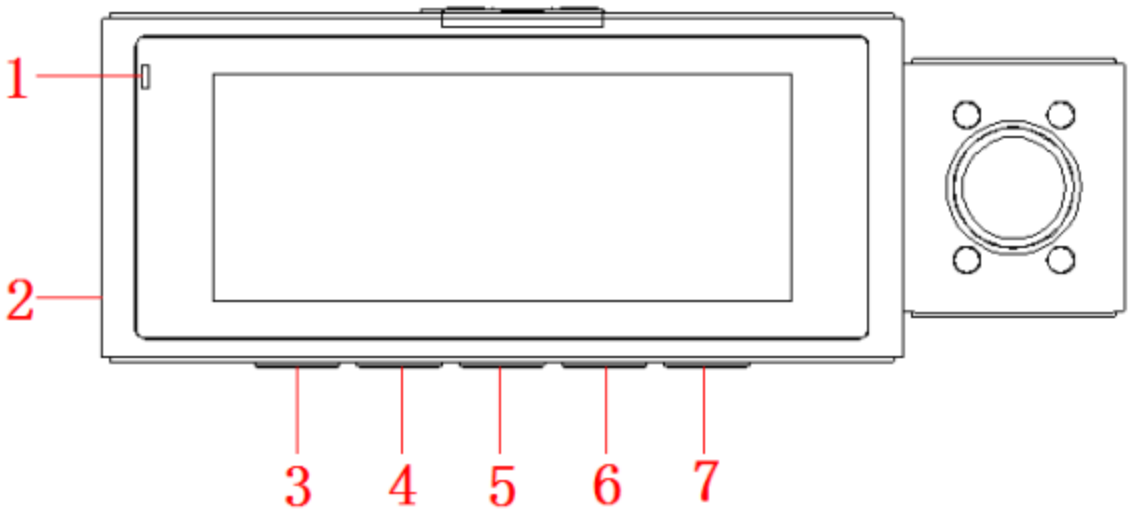

1	Power light	2	Reset button
3	Power button	4	Up button
5	Down button	6	Menu/Playback
7	Confirm button		

[⏻] Power button, short press to turn on/off screen, long press to switch on/off the device.

[◀] Short press to turn on/off the night vision light,long press to Manual capture.

[▶] Short press to change multi views,long press to turn on the wifi.

[M] Short Press to enter menu interface, long press to enter

playback mode.

[OK] Stop video recording; take the photo under the Photo Mode; confirm button.

2.Product Specification

DDR	Built-in 2GB
FLASH	16M SPI norflash
Display screen	3.16 inch IPS HD screen
Resolution	2K+1080P+1080P
External port	USB Type-C 5V/2.5A power adapter port
	Max support 256G Class10 TF card
	2.5mm digital 1080P rear view lens port
Speaker	Monophonic 15*10mm speaker
MIC	Built-in（8R1W）

Features

Front camera	170°wide angle
Inside camera	1080P
GPS tracker	Support(optional）

AV OUT	2.5mm port
Rear camera	1080P(optional）
Lens rotates	Adjust manually
WDR	Support
HDR	Support
Reversing visual	Support
Video format	MP4
Image format	MJPEG
Compression format	H.265/H.264
Battery	250mAh polymer lithium battery
Language	Support multi-language
G-sensor	Support
Motion detection	Support
Delay shutdown	Support
Loop recording	Support, 1Min /2Min /3Min
Sound record	Support

Fill light for night	Support(Open manually)
Parking monitoring	Support
Front camera	QHD 2160*1440
Inside cam resolution	FHD 1920*1080P
Working Environment	
Operating temperature	-40°C~70°C
Operating humidity	15-65%RH
Storage temperature	-40°C~70°C

3. Product installation

1.TF memory card installation

2.Power supply, camera installation

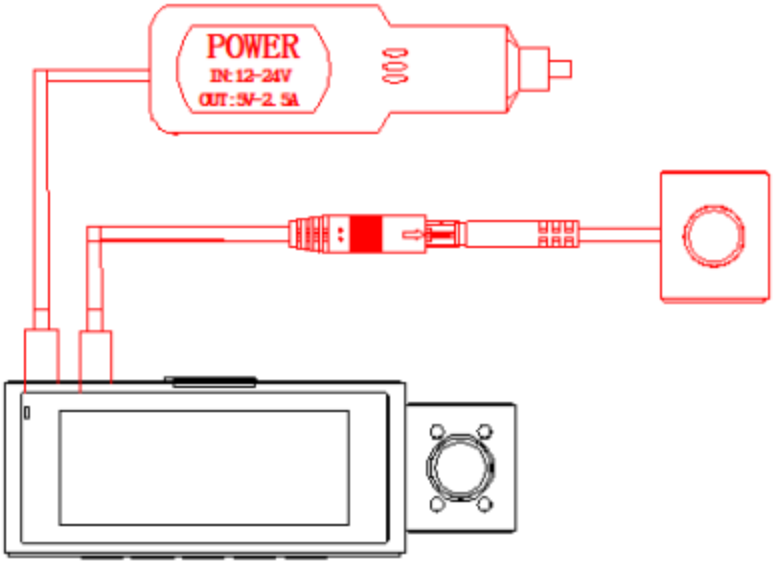

3.Bracket mounting (in the direction of the red boot sequence)

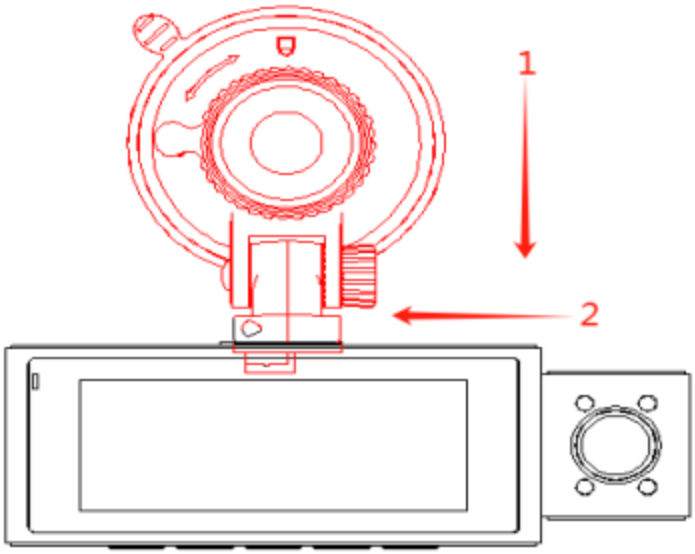

4.Installing the Dash Cam

4.1.Use the Suction cup mount with to Install the dash cam on the windshield, recommended place near the rear view mirror facing front, adjust the lens angle for best coverage.

4.2.Plug the included power adapter into the car cigarette lighter socket, the indicator will light up meaning power is on.

4.3.Connect the power cable to the USB port on the suction cup mount. For better looking, route the excess cable alongside the interior trim as the diagram shows.

4.4.After installation, please start the engine, and test it to make sure all function works well.

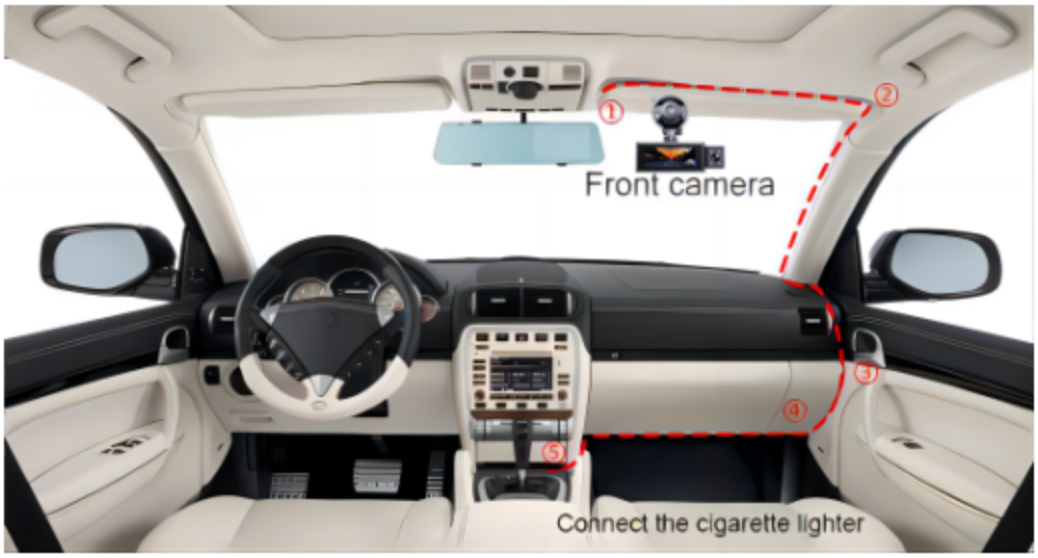

5.Install the rear camera

5.1.The rear camera is installed above the inner of the rear windshield. (It can be installed by yourself, the reversing visual function cannot be achieved, and it can only record rear videos)

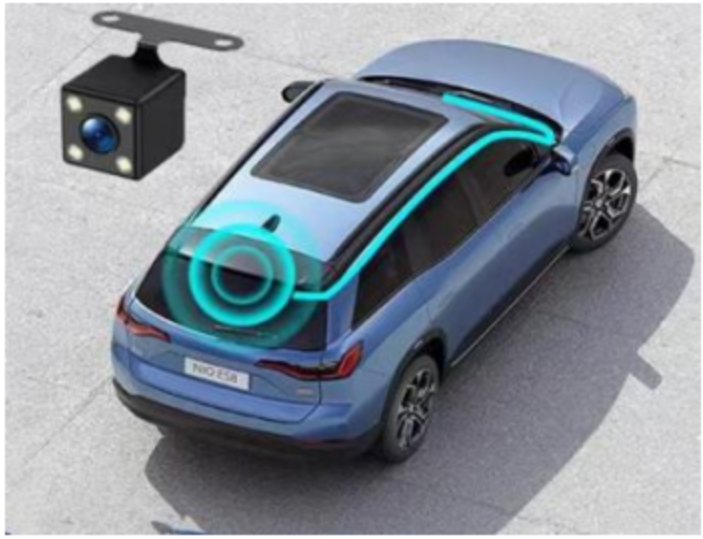

5.2. The rear camera is installed above the license plate frame by a professional or yourself. And connect the camera to the reversing light power supply, which can achieve the reversing visual function. (The red power wire on the rear camera can be connected to the reversing light power supply.)

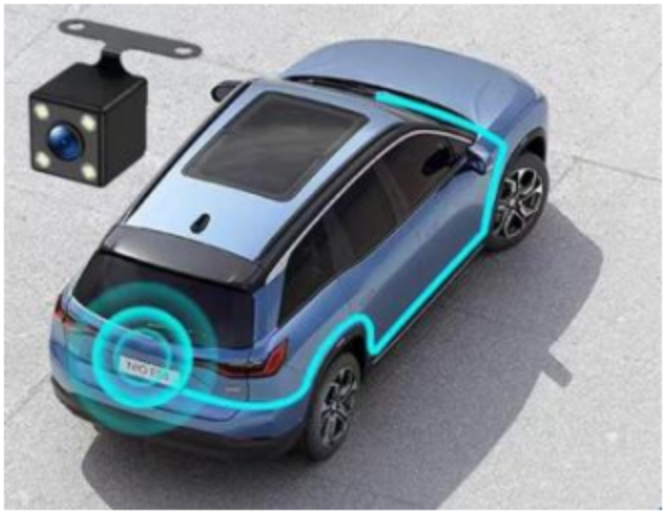

4. WiFi APP download manual

1.The WiFi name is (Viidure), you can search for Viidure in the mobile browser and mobile application market , click to download and install.

2. Scan the QR code to download Viidure.

3.WiFi QR code has Apple and Android mobile phones corresponding to the QR code scan

WiFi Instructions

Note:WiFi on, no connection, 3 minutes automatically closed.

1. First, on the menu page, select WiFi: Open

2.When you open WiFi, the WiFi account and password will appear. At this time, we open our mobile phone settings and click WiFi to query the corresponding Dash cam account and password.

3.Note that the WiFi account will change for each machine (V23_******) and the password will remain the same(12345678)

4.After the connection is successful, click to enter the Viidure APP to control the Dash cam on the mobile phone engine ignition of the vehicle is switched on / off.

5. Description:

Manual Power On/Off

1.Manual Power On

Hold the [⏻] button until the start up screen appears.

2.Manual Power Off

Make sure that recording has been stopped(no red dot flashing on the screen. Press the [⏻] button of the dash cam for 10 seconds to turn off the camera.

Reset the Device

If the dash cam does not function normally,try restarting the dash cam. Please insert a flattened paper clip into the "R" hole on the side of the dash cam for 5 seconds, then release it. The dash cam will restart.

Initial Settings

Before using the dash cam we recommend Formatting the Inserted Micro SD Card, setting the correct Language, Time and Date. After setting the initial settings, press [M] to return to standby mode. Press the [OK] button to start camera operation.

Set the Language

1. Press the [OK] button to stop the recording and press the [M] button to enter the system menu

2. Press the [▶] button to select the language option and press [OK]

to enter the language setting.

3. Press the [◀] or [▶] button to select your language, press [OK] button to confirm and return to the system menu.

Set the Date and Time

Setting the Time and Date allows you to stamp your footage with the time as a reference.

1. Press the [OK] button to stop the recording and press the [M] button to enter the system menu .

2. Press the [▶] button to select the date and time option, and press [OK] to enter the setting.

3. Press to the [◀] or [▶] to adjust the number, press [OK] to confirm and go to the next item.

4. Press [M] to return to the system menu.

Format the Memory Card

Formatting the Micro SD card will delete all information on the inserted Micro SD Card and prepare the card for use with the dash cam.

1. Press the [OK] button to stop the recording and press the [M] button to enter the system menu.

2. Press the [▶] button to select format option, press [OK] to enter the setting.

3. Press the [▶] button to select "OK", press [OK] to confirm the

formatting and return to the system menu.

Note:1.Menus cannot be accessed while the camera is recording.Please stop the recording before attempting to access the menu.(The blinking green dot on the screen means the camera is recording video).

2.Formatting your Micro SD Card will delete all files from the card.Once these files have been deleted you will not be able to recover them.

3. After setting the initial settings, press [M] to return to standby mode. Press the [OK] button and the camera starts working.

View the Recorded Videos

4.5.1 Playing Back Video on dash cam

1) Press the [OK] button to stop recording (no green dot flashing on the screen)

2) Press and hold the [M] button for 3 seconds to enter video playback mode.

3) Select a video by pressing the [◀] and [▶]button. Press [OK] to play the video.

Locked Recording

Lock Recording saves the current video file and prevents it from being overwritten. When the car encounters a collision, the G-sensor detects the vibration and the camera automatically locks the video.

To manually activate locking video, follow the instructions below.

6.Operating Mode

The dash cam operates in 3 modes: Video Recording Mode, Playback Mode and Manual capture. These modes also have menu to help you configure recording .

Power on :Video Recording Mode, press 3 seconds [◀] is the Capture function, press 3 seconds [M] button is the playback mode.

Video Recording Mode

The camera will automatically enter Video Recording Mode and start recording when connected to a car charger and power on.

A green dot flashing on the top left corner indicates recording is in progress. Press the [OK] to stop recording or start recording again.

Video Recording Menu

Resolution: 2K+1080P+1080P

Light freq: 50Hz/60Hz, If the camera interferes with the radio, try changing the frequency.

Mirror: Front, Rear, In-car,switch mirror image /original image function.

Loop Time: 1 /2 / 3 Min. This function allows you to set the recording video file length to 1/2/3 minutes to automatically overwrite the earliest file when the SD card's storage fills up. (1 minute setting by default).

Mic: Turn sound recording on or off.

Gsensor: G-sensor will detect significant or sudden shock and movement then the camera will automatically lock current recording file.The detection sensitivity can be adjusted to OFF / Low / Middle / High.

Parking monitor: (To achieve unattended surveillance video)

To achieve this function, the dash cam must remain electricity (requires connection of hardwire kit, sold separately), and open the motion detection and parking monitoring function in the menu.When the dash cam detects a collision while parked, it will automatically turn on and then record a locked video for 30 seconds, and automatically shut down.

Language: Set the language for the dash cam (English,German,French,Spanish,Italian,etc.)

Brightness: optionally adjust the Brightness of the display to 1-10.

Screensave: off / 30 seconds /60 seconds. Timing can automatically turn off the display screen, so that the product can work under extremely low power consumption. Choose " 60 seconds" means that it will enter the power saving mode after 60 seconds of power on, and turn off the display.

LED: Turn on or off the 4 IR LED lights next to the inside camera.(In video mode, press the [◀] to turn on/off the night vision

light)

GPS Status (Optional): Track Record, Speed,Latitude and Longitude, Altitude, Atmospheric Pressure, UTC.

WIFI: Turn OFF or ON，note:Automatically turn off after 3 minutes of activation.

Speed Unit: KMH / MPH

Timezone: Set the correct time zone.

Clock:Set the time and date. Press the [◀] and [▶]button to adjust the numbers, then press the [OK] button to confirm/change, and press the [M] button again to exit the time setting.

Watermark Options: close,date,Travel speed.

Card Info: Mount Status:Normal Video,Sos Video,Photo.

Format: Completely delete all files in the storage card.

Reset: Return menu setting Defaults.

Version: The firmware version of the dash cam.

Playback Mode

This mode allows you to playback recorded video,Sos Video or view photos, and manage the recorded files.

1.Stop the video recording, long press the M button to enter Playback Mode, you can view all the files in this mode.

2. Use the [◀] and [▶] button to scroll through the Normal Video / Sos Video / Photo, and press[OK] to play or pause playing the selected file.

3. Long press the [M] button to enter the video screen. You can delete video files.

4.Press the [M] button to quit playback and return to standby mode.

Problems and Answers

1.Can't get to the menu?

When the camera is recording video, the menu button does not work. A flashing green dot on the screen means the camera is recording video. Please press OK to pause recording, then press M to enter the menu.

2.The dash cam will stop automatically when recording.

Solution:

①.Check whether the memory is full.

②.Check whether the loop recording function of the dash cam is working.

③.Check whether the Micro SD card is high-speed above U3.

④. Playback the recorded video on dash cam to check whether there might be to many locked videos, which cause the SD card space run out and stop looping recording. If yes, please format the SD card.

3.If the video played on the computer is somehow jammed or not

fluent. There might be the problem with the memory card speed.

Solution:

①.Format your Micro SD card in the camera.

②.Change a U3 or above high-speed Card.

4.There are stripes interference in the video. Or radio is disturbed.

Solution:

There should be wrong light freq. According to the local main frequency, make the appropriate settings 50HZ or 60HZ.

5.Suction mount cannot attach on windshield well?

Solution:

① .Please clean the windscreen where attaching with a glass cleaning wipe. Removed the protective film, If it does not work, warming your windscreen then try it again.

②.Please soak suction mount to warm water for a moment.

③. If it is still not working, we are glad to send a new suction mount to you, please contact us to get a replacement.

6.Without external power supply, the camera will not power on, or the camera will power off immediately after the external power supply is disconnected.

Solution:

This is normal. This dash cam needs a 5V 2A external power supply to be power on.

7.The camera keeps turning on and off repeatedly.

Solution:

①. Please check if the charging cable is well connected.

② .Please insert a paper clip into the "R" hole on the side of the camera for 3 seconds, then release. The camera will restart automatically.

③.Please format the memory card in the menu.

④.Please check if the camera is back to normal.

8.How does the camera work after it crashes?

Solution:

If the machine crashes for some reason during use, please insert a paper clip into the "R" hole on the side of the camera for 3 seconds, then release. The camera will restart automatically.

FCC warning：

1. This device should be installed and operated with minimum distance 20cm between the radiator&your body.

2. This device complies with part 15 of the FCC Rules. Operation is subject to the following two conditions:

(1) This device may not cause harmful interference, and

(2) This device must accept any interference received, including interference that may cause undesired operation.

3. Changes or modifications not expressly approved by the party responsible for compliance could void the user's authority to operate the equipment.

4. This equipment has been tested and found to comply with the limits for a Class B digital device, pursuant to part 15 of the FCC Rules. These limits are designed to provide reasonable protection against harmful interference in a residential installation. This equipment generates, uses and can radiate radio frequency energy and, if not installed and used in accordance with the instructions, may cause harmful interference to radio communications. However, there is no guarantee that interference will not occur in a particular installation. If this equipment does cause harmful interference to radio or television reception, which can be determined by turning the equipment off and on, the user is encouraged to try to correct the interference by one or more of the following measures:

—Reorient or relocate the receiving antenna.

—Increase the separation between the equipment and receiver.

—Connect the equipment into an outlet on a circuit different from that to which the receiver is connected.

—Consult the dealer or an experienced radio/TV technician for help.