120mm

60mm

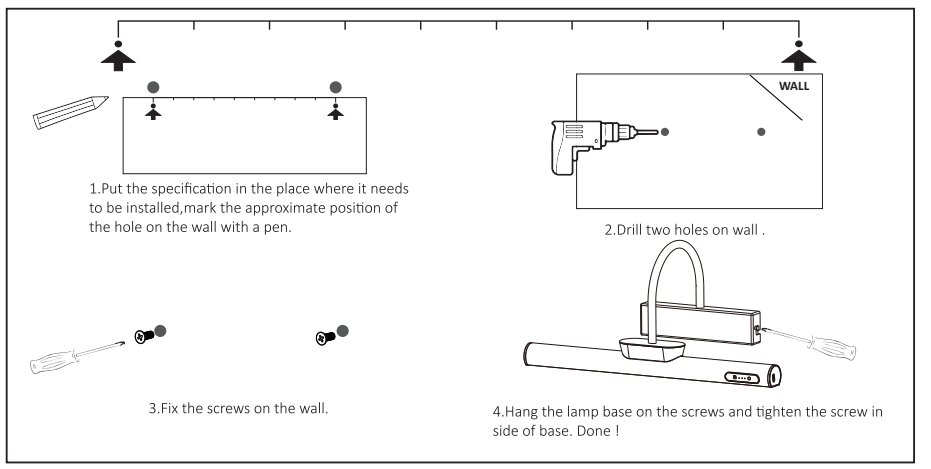

可调支架圆柱画灯专用说明书
120*60mm
双面印刷
157g铜版纸

0001

Using method:

1.Recharging: Use the cable in package to charging with the USB-C port.

2.Power display: It respectively displays 30%-60%-90% power. The indicator light will be on when the light is on, the corresponding power indicator will flash during the charging process, and the indicator will stop flashing when it is fully charged.

3.3 Light Colors: After turn light on,just tap the touch sensor to choose light colors.

4.Turn Light on /off &Dimmable: Short press the another touch sensor to turn light on/off,long press to dim.

5.Remote Control: The remote control distance is 4M/13FT.Aim at the picture light.

Information

Item Name	Picture Light	Model	YM-JQ-350YK
Voltage	DC 5V	Electricity	2A
Material	Aluminium+iron+PC	Light Source	LED
CCT	White/Warm/Nature	Wattage	2.5W MAX

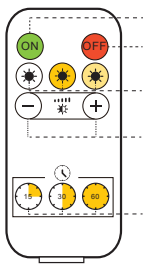

Turn on the lights

Turn off the lights

"White Light, warm light, natural light",color temperature switch

"Reduce, increase"adjust brightness(Ten dimmers)

"15 minutes, 30 minutes, 60 minutes" Timing

※The First time,be sure to pull out the bottom insulator

Warranty:

Dear Customer:

For your better using experience,We offer 1 year after sale service,If you have any question, please don't hesitate to contact us via amazon email from your order page. we are always here providing prompt response and good solutions to you within 12 hours.

FCC Statement

This equipment has been tested and found to comply with the limits for a Class B digital device, pursuant to Part 15 of the FCC Rules. These limits are designed to provide reasonable protection against harmful interference in a residential installation. This equipment generates uses and can radiate radio frequency energy and, if not installed and used in accordance with the instructions, may cause harmful interference to radio communications. However, there is no guarantee that interference will not occur in a particular installation. If this equipment does cause harmful interference to radio or television reception, which can be determined by turning the equipment off and on, the user is encouraged to try to correct the interference by one or more of the following measures:

-- Reorient or relocate the receiving antenna.
-- Increase the separation between the equipment and receiver.
-- Connect the equipment into an outlet on a circuit different from that to which the receiver is connected.
-- Consult the dealer or an experienced radio/TV technician for help.

This device complies with part 15 of the FCC Rules. Operation is subject to the following two conditions:
(1) This device may not cause harmful interference, and (2) this device must accept any interference received, including interference that may cause undesired operation.

Changes or modifications not expressly approved by the party responsible for compliance could void the user's authority to operate the equipment