AIR SOURCE CHILLER HEAT PUMP UNIT

# INSTALLATION MANUAL

GTMF-B30Y（110V/1N～/60Hz）

- Please read this manual carefully before using this product.
- Please keep this manual for future reference.

# Air Source Chiller Heat Pump Unit

# Installation, Maintenance and Control

# Technical Manual

Version: V1.1

---

## To owner

Thank you for choosing our air to water heat pumps for your house heating/cooling system.

It requires proper installation, usage and maintenance in order to achieve less failure rate so that increase the life-span of the heat pump.

Besides, if good hydraulic system and maintenance was carried out, it enables higher efficiency and reduce the power consumption of the heat pump system.

If the heat pump is out of use in cold days, please release all the water inside the water system, in order to avoid freezing damage on the water heat exchanger.

We contribute ourselves in technical improvement on the heat pump and reserve the right to modify this manual without prior notice. Please keep update with us and take the specification on the nameplate of heat pump as the most updated data.

# Accessories

| | |
|---|---|
| **Items** | 1x Heat Pump Unit<br>1x Technical Manual |

# Suggest Parts that prepared by installer:

| Description | Power Cable | Water Pipes and Adapter |
|---|---|---|
| **Specification** | See table 3-1 | 1 Inches |
| **Remark** | For power supply | For water inlet and outlet |

**Remarks:**

1. Above accessories are minimum requirements for the proper installation.
2. The other accessories should be prepared according to the system connection requirements And local regulations and laws.

# CATALOG

PART I: GENERAL ..... - 1 -
1.1. Main Components ..... - 1 -
1.2. Regular Requirements ..... - 1 -
1.2.1 Operating Requirements ..... - 1 -
1.2.2 Storage Requirements ..... - 1 -
1.2.3 Anti-Freezing Warning ..... - 1 -
1.3. Technical Specification ..... - 2 -
PART II: Mechanical Installation ..... - 4 -
2.1. Transportation, Unpacking, Examination ..... - 4 -
2.1.1 Unpacking ..... - 4 -
2.1.2 Check ..... - 4 -
2.1.3 Transportation and Handling ..... - 4 -
2.2. Cautions of Installation ..... - 5 -
2.3. Safety Precautions ..... - 5 -
2.4. Installation Site Selection ..... - 5 -
2.5. Space Requirements ..... - 6 -
2.6. System Installation Layout ..... - 7 -
2.6.1 Pool/Pond System ..... - 7 -
2.7. Installation ..... - 8 -
2.7.1 Installation Space Requirements ..... - 8 -
2.7.2 Space for Maintenance ..... - 8 -
2.7.3 Installation Steps ..... - 8 -
2.8. Checkpoints ..... - 8 -
PART III: Electrical Installation ..... - 9 -
3.1. Cautions ..... - 9 -
3.1.1 Suggested Power Cable Specification ..... - 9 -
3.2. System Wiring ..... - 9 -
3.2.1 Wiring Requirements ..... - 9 -
3.2.2 Wiring Steps ..... - 10 -
3.3. Checkpoints ..... - 10 -
PART IV: System Trail Run ..... - 11 -
4.1. Cautions Before Trail Run ..... - 11 -
4.2. Checkpoints ..... - 11 -
4.3. Trail Run ..... - 11 -
PART V: Controller ..... - 13 -
5.1 Interface ..... - 13 -
5.2 Wire control operation ..... - 13 -
5.3 Heat pump parameter comparison table ..... - 15 -
PART VI: System and Maintenance ..... - 17 -
6.1. Cautions ..... - 17 -

6.2. Restart ..... - 17 -
6.3. System Check and Inspection for maintenance ..... - 17 -
6.3.1 Electrical Parts Maintenance ..... - 17 -
6.3.2 Refrigeration System Maintenance ..... - 17 -
6.3.3 Replacement of Compressor ..... - 18 -
6.4. Possible Solution to Failure ..... - 19 -

# PART I: GENERAL

In this part, Air Source Chiller Heat Pump will be introduced in paragraph of Main components, Operating Theory, Transportation and Storage requirements.

## 1.1. Main Components

Main components of a heat pump mainly indicating compressor, fin-tube air heat exchanger, water heat exchanger, fan motor, controller, expansion valve etc.

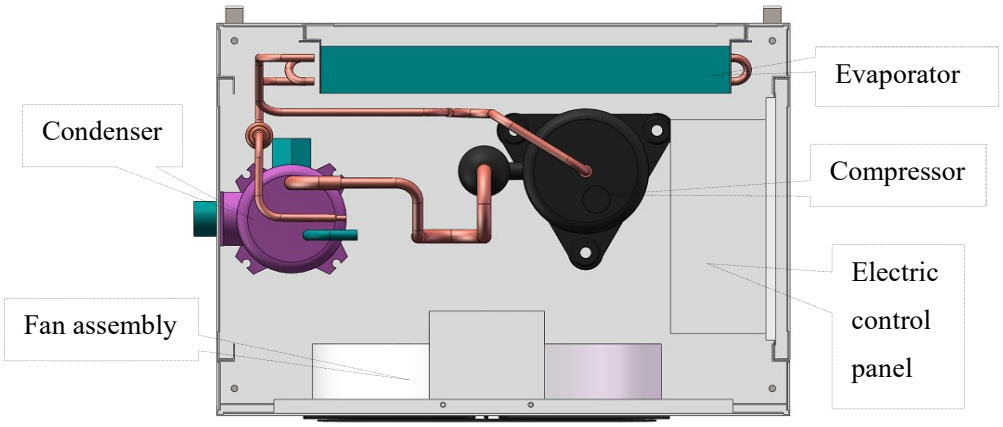


## 1.2. Regular Requirements

### 1.2.1 Operating Requirements

Table 1-2

| Item | Requirements |
|---|---|
| Location | Horizontally installation |
| Air Temperature | Outdoor:0°C to +43°C |
| Humidity | Outdoor: 5%RH~95%RH |
| Power Supply | 110-120V / 1N / 60Hz; |
| Latitude | No more than 1000meters, derating when above 1000meters, |
| Protection Grade | IPX4 |

### 1.2.2 Storage Requirements

Table 1-3

| Item | Requirements |
|---|---|
| Surrounding | Indoor, clean |
| Humidity | 5%~85%RH (no condensed water) |
| Air Temperature | - 35°C to 54°C |

### 1.2.3 Anti-Freezing Warning

**When outdoor air temperature below 0°C:**

**-The water inside water heat exchanger must be drained;**

**-Otherwise the water heat exchanger could be frozen to brake and led to invalid warranty.**

## 1.3. Technical Specification

Table 1-1

| MODEL | | GTMF-B30Y |
|---|---|---|
| Cooling mode | / | Circulating |
| Ambient temp. range | ℃ | ≤+43℃ |
| Rated cooling capacity | KW | 3.0 |
| EER | W/W | 3.0 |
| Rated power input | KW | 1.0 |
| Max. running current | A | 12 |
| Power supply | / | 110-120V/1N~/60Hz |
| IP code | / | IPX4 |
| Safety function | / | High and low voltage protection; Overload protection; Temperature protection, etc. |
| Refrigerant type/weight | / | R410a/500g |
| Compressor QTY | PCS | 1 |
| Compressor type | / | Rotary |
| Min. temp. outlet water | ℃ | 2 |
| Water side heat exchanger type | / | Titanium tube heat exchanger |
| Air side heat exchanger type | / | Finned heat exchanger |
| Water- In Specification | inch | G1" |
| Water- Out Specification | inch | G1" |
| Circulating water volume | $m^3/h$ | 1.3 |
| Fan motor QTY | PCS | 1 |
| Noise | dB(A) | 53 |
| Machine dimension (WxDxH) | mm | 525×365×520 |
| Net Weight | kg | 33 |
| Gross Weight | kg | 38 |

**Remarks:**

1. Test conditions:Outdoor air temperature DB35°C,initial water temperature 25°C, final water temperature 10°C.
2. Due to product improvement, above datas are subject to change without priop notice, please take the rating plate as standard.

# PART II: Mechanical Installation

This part will introduce the mechanical installation, transportation, unpacking, installation position, and installation procedure and so on.

## 2.1. Transportation, Unpacking, Examination

### 2.1.1 Unpacking

The heat pump should be unpacked near installation site, as follow steps:

1. Remove the plywood package (if it is available)
2. Remove the carton
3. Remove heat pump from pallet

### 2.1.2 Check

Check the quantity of accessories comes along with the heat pump and check if there is any damage on the heat pump by visual check. If any missing of accessories or damage had been found, please report to carrier and local dealer for further handling.

### 2.1.3 Transportation and Handling

The inclination angle of heat pump should not exceed of 75° to 105° when handling. º

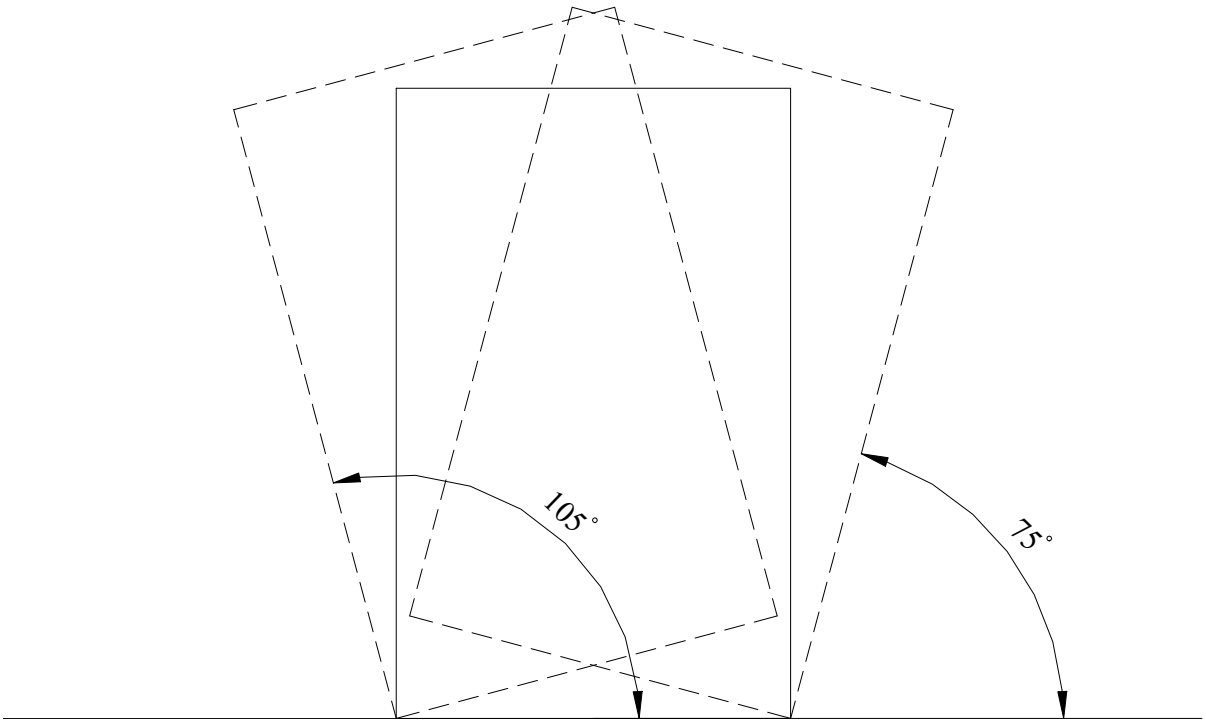

## 2.2. Cautions of Installation

1. Correct installation is critical to achieve best performance and longest life-span of the heat pump. Both the mechanical and electrical instructions included in the manual and the local regulations should be applied.
2. The heat pump must be installed vertically as a whole on the ground or floor outdoor.
3. Installation site should comply with the installation location requirements and confirm if there any modification on the building in order to carry out pipeline, wiring and ventilation arrangement.
4. The installation must be carried out according to the project design and maintenance space must be obtained for future.

## 2.3. Safety Precautions

- The installation of heat pump must be carried out by professional installer with competence. Otherwise it might cause fire, electrical shock, injury and water leakage.
- The grounding must be well installed and connected. Otherwise it might lead to electrical shock.
- Do not insert finger, stick or similar object into the grid of fan motor. Otherwise it will cause injury to human body or damage on the heat pump.
- If abnormal occurred, like burnt smell or noise, cut off the power supply and contact the installer.
- Any modification or repair on the heat pump by owner is prohibited.
- The repair on the heat pump should be carried out by installer or competent technician with authorization.
- Circuit breaker must be installed properly.
- confirm the power cable is connected correctly to the circuit breaker and the power terminal of the heat pump, otherwise, damage to the electrical components of the heat pump maybe happened.
- The heat pump must not be installed around flammable, pollutive, volatile environment in order to avoid fire or explosive. In case of fire happened, power supply must be cut off immediately.
- Periodical check on the support frame or base and make sure the heat pump has been fasten firmly will avoid the risk of fallen and injury to human body.
- Before necessary maintenance or cleaning on the heat pump, the power supply of heat pump must be cut of manually in order to avoid injury to human body or damage to the heat pump.
- It is prohibit to touch the exhaust gas pipe inside heat pup system so that to prevent scald on human body.
- Fuse must be well installed in electrical system. It is prohibit to use copper wire or iron wire to replace the fuse, otherwise the damage to heat pump or fire could be caused.
- No flammable or acid liquid should be spray to the heat pump.

## 2.4. Installation Site Selection

1. The site where have plenty of air flow and enough space for maintenance should be chosen.
2. The environment should free of pollutive, flammable or corrosive air which could erode the fine-tube heat exchanger and casing of the heat pump.
3. If the installation site is accessible, the shelter or guard fence should be installed around the heat pump to prevent man-made or accident damage to the heat pump.
4. The support wall where supporting frame fixed or the base where heat pump installed on should be able to hold the weight of the heat pump.
5. The heat pump must be installed on horizontal ground so that to avoid abnormal vibration and noise.
6. The operating noise of heat pump and cool air discharge should not bothering on neighbor.
7. Piping work and electrical work should be easily carried out at the chosen site.
8. Professional advice should be asked if the heat pump will be installed at special or restricted place.

Note: Consult on installation if it will be carried out on sites as below:

- mineral oil available
- with salty air and near the sea
- near hot spring/geyser area
- unstable power supply area
- auto-mobile or engine cabin
- kitchen or similar cooking place cooking smell
- with strong electromagnetic wave
- with flammable material or gas
- in acidic or alkalescent environment
- in other environment with special condition

## 2.5. Space Requirements

Recommended minimum space for single-unit or multi-unit installation (unit: mm)

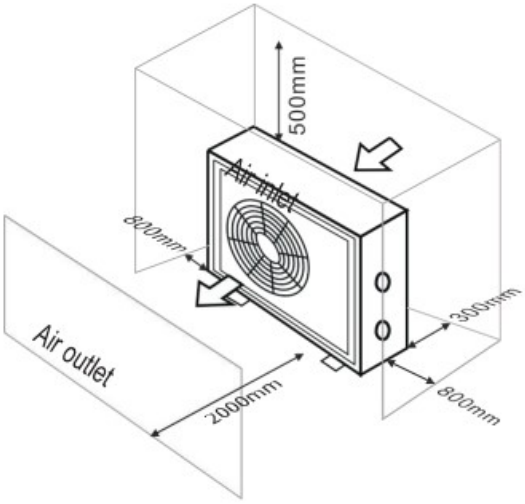


**CAUTION**

- Required service & water pipes connection space when installing the unit.
- If there are obstacles in front of the air outlet of the unit, please make sure that the obstacles are more than 2000mm from the air outlet.
- If there are sundries around the unit, please make sure that the sundries are more than 400mm from the blow of the unit.
- The unit should not be installed in basements, indoors or other confined spaces. If the project requires the unit to be installed in such spaces, please consult with our company or the designated supplier.

## 2.6. System Installation Layout

### 2.6.1 Pool/Pond System

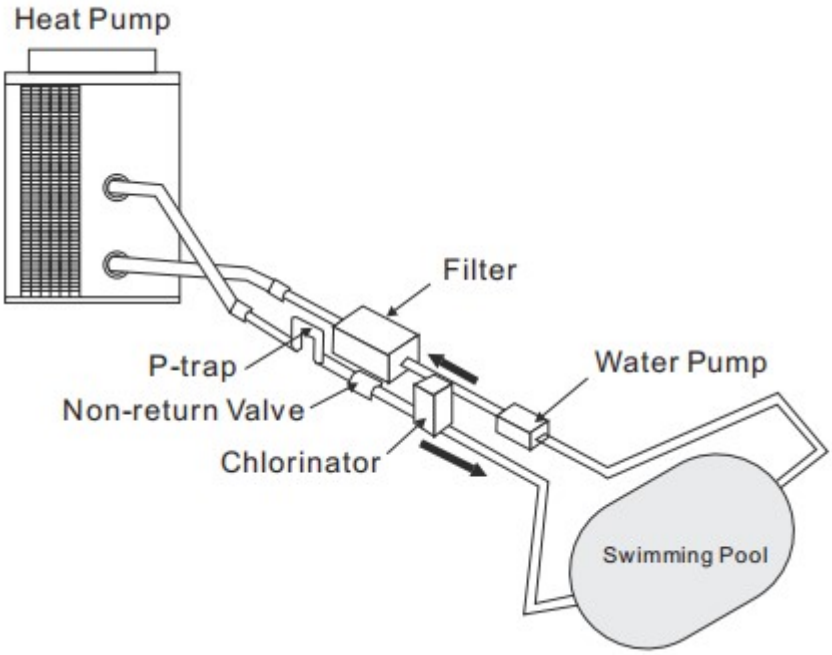


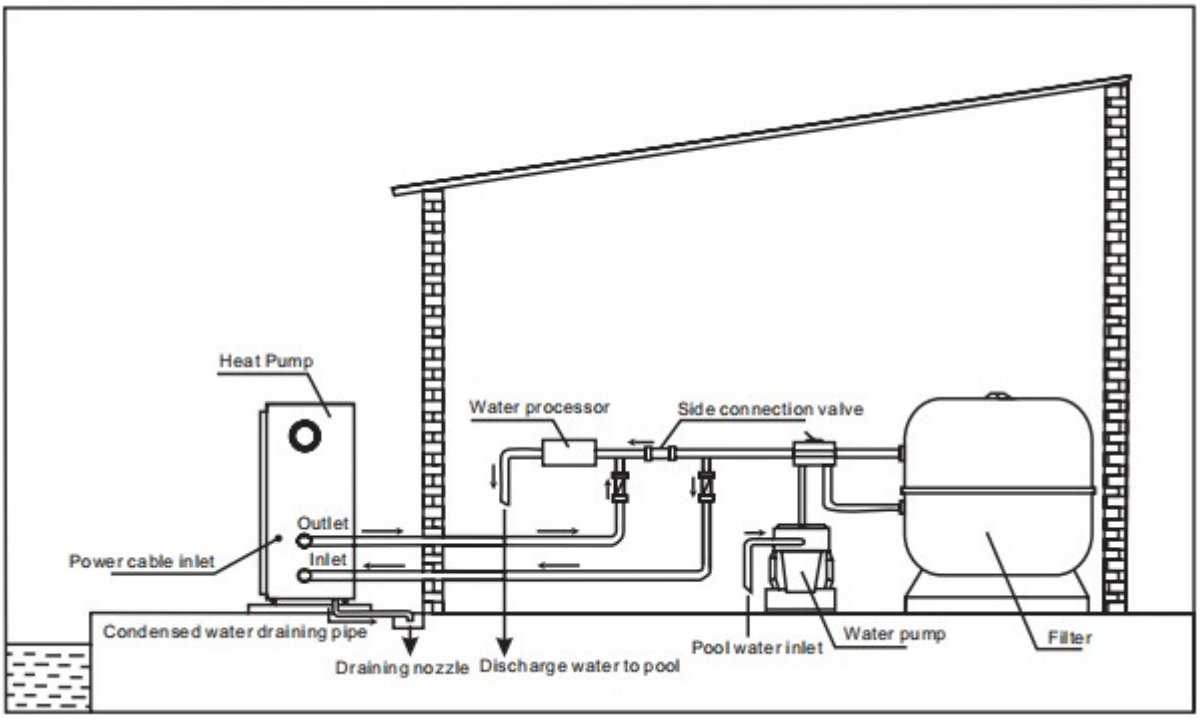


**NOTE:**

Install a by-pass when the flow of the pool pump exceeds the authorized flow through the heat exchanger of the heat pump with 20%.

# 2.7. Installation

## 2.7.1 Installation Space Requirements

**CAUTION**

Condensed water comes from heat pump must be drained properly, otherwise it might lead to damage to other device surrounded.

1. A spacious location is preferred for installation in order to make sure normal operation of the heat pump.
2. Multiple heat pumps installation request enough space to avoid air disturbance, unbalance loading and competitive operation.
3. When the installation is carried out on roof top, cautions on water-proof layers should be taken and it should compliant with local regulation and law.

## 2.7.2 Space for Maintenance

1. There is no obstacle at 1 meters distance from heat pump fan outlet.
2. The maintenance space at the left, right and rear of the heat pump should be at least 60cm.

## 2.7.3 Installation Steps

1. A base should be created according the size of base which can be made by stone, concrete or steel.
2. Select and confirm the installation site.
3. Locate the heat pump on the base.
4. The heat pump could be incline to the drainage side.
5. Fixed to a strong floor.

# 2.8. Checkpoints

1. Is there enough space around the heat pump in order to carry out easy maintenance?
2. Has the heat pump installed horizontally and screws fasten?
3. Is all the pipeline connected well and valves were all opened?
4. Is the drainage pipe connected and under correct disposal?
5. Are all the connections tighten?
6. Has the surround area are clean up?

Electrical works can be started after checked out above points.

# PART III: Electrical Installation

This part will introduce the electrical installation including task introduction, installation cautions, wiring and installation check.

## 3.1. Cautions

● The power supply must comply with the specification listed on nameplate.

● Grounding wire must be available and make sure it is effectively connected to the ground.

● The electrical wiring must be carried out by professional technician with competent according to the wiring diagram on the heat pump.

● The external wiring of heat pump must be complied with law and local regulation, and the circuit breaker must be installed to the main power supply of heat pump.

● Power cables and signal cables should be sorted out and do not interring each other.

● All the cables or wires should not touch the refrigerant piping or valves.

● Careful inspection should be carried out, after all the electrical wiring had been done, and before turn on the circuit breaker.

**Warning**

**The communication cable that connects the controller panel and power supply must NOT be tied together, or close to TV, Hi-Fi and any other device that could generate electrical impact, in order to prevent the interaction of electricity, with a distance of at least 30cm.**

### 3.1.1 Suggested Power Cable Specification

The power cable specification must not less than below requirements on each model.

Table 3-1

| **Heat Pump Model** | GTMF-B30Y |
|---|---|
| **Power Supply** | 110-120V/1N～60Hz |
| **Maximum current (A)** | 12 |
| **Power Cable Specification (mm²)** | 2.5 |
| **Grounding Wire Specification (mm²)** | 2.5 |

## 3.2. System Wiring

### 3.2.1 Wiring Requirements

1. No extra electrical circuit is allowed to connected to the electrical box, otherwise, the magnetic interfering may cause failure or damage on heat pump and control PCB, finally lead to invalid of warranty.

2. The 220V power is available either in electrical box or control PCB. When connecting wires and cables, please follow the principle of separating strong current and weak current. The cable of LCD controller should not tie together with the power cable.

3. All the wiring should comply with the local regulation. Home owner has the obligation to ensure the home power is stable in voltage and current.

4. There must be a manual switch on the power supply circuit and ensure that when the switch is turn off all the voltage after switch is released.

5. The power cable used for electrical wiring should comply with the specification required, as above table (see Tab3-1).

6. Separate the grounding wire from other home electrical appliances.
7. Periodically check on the reliability of grounding wire will help to avoid the risk of electrical shock.
8. All the wiring should be sheltered to avoid rain/water in-leakage, so that to prevent electricity leakage.

### 3.2.2 Wiring Steps

1. Connect the grounding wire to the electrical box where has a symbol ⏚ and make sure it is screwed tightly.
2. Connect the LED controller and its cable according to the wiring diagram, then fix the LED controller panel inside the house.
3. Thermally conductive silicone should be applied to both the sensor pocket on the water tank (cylinder) and the surface of the water tank sensor. Insert and fasten the water tank sensor inside the sensor pocket to prevent fallen.
4. Install a power control box at suitable position where power cable goes to the heat pump.
5. Through the power cable hole, connect the power cable and grounding wire to the heat pump.
6. The power cable must be clipped well by the power cable clip.
7. Connect power cable to L and N in the power supply terminal correctly and tightly.
8. Make sure all connections are correctly and tightly connected before switch on the circuit breaker.

## 3.3. Checkpoints

1. Is the power supply specification the same as that on the nameplate of heat pump?
2. Is there any circuit short or open?
3. Are the circuit breaker, power cable and grounding wire well connected?
5. Confirm all the screws are tighten screwed.

---

Note: The heat pump must be correctly and effectively connected to the ground.
Trail run can be started to be processed once above checkpoints are finished.

# PART IV: System Trail Run

This part has included the preparation works for trail run.

## 4.1. Cautions Before Trail Run

- Electrical safety check should be carried out before trail run.
- Make sure no bloc on air flow in and out.
- Open all the valves in the water loop and flush the hydraulic piping system.
- Make sure all the air inside the hydraulic system, refer to 4.3.
- Prohibit to turn on the heat pump without finished the below checkpoints.
- The heat pump must be connected to power supply for 24 hours before turn it on.

## 4.2. Checkpoints

| Checkpoint | Description | Yes | No |
|---|---|---|---|
| **Installation Site** | Has the heat pump installed horizontal firmly? | | |
| | Is the air flow surrounding heat pump good? | | |
| | Is there enough space for maintenance? | | |
| | Is the outlook of installation looks good? | | |
| **Hydraulic System** | Is the water pipes specification compliant? | | |
| | Is the system pressure satisfied? | | |
| | Has the insulation work done? | | |
| | Is the air vented out from hydraulic system? | | |
| **Electrical System** | Has circuit breaker came to effect? | | |
| | Is the grounding wire connected effectively? | | |
| | Is the cable specification compliant? | | |
| | Is the switch specification compliant? | | |
| | Is the fuse specification compliant? | | |
| | Is the current and voltage compliant? | | |
| | Are all the connections firm? | | |
| | Is the safety device compliant? | | |
| | Is the controller connected correctly? | | |

## 4.3. Trail Run

Start up the heat pump with the operation on LCD controller and check:

1. LCD controller display and buttons works in good condition.
2. Indicator works in good condition.
3. Water flows are working normally.

4. Water temperature difference (4~7°C) between water in and out.
5. Vibration and operating noise is normal.
6. The cool air discharge, noise and condensation is not bothering neighbor.
7. No refrigerant leakage.

📖 Note: Compressor delay for 3 minutes for protection purpose when heat pump restart.

# PART V: Controller

This chapter introduces the use of the operation panel, including the panel LCD screen description, panel button description, operation instructions, parameter query and other interface operation instructions.

## 5.1 Interface

## 5.2 Wire control operation

- Switch mode, tap Function to switch between heating, Auto, and cooling modes。
- Heating mode: icon lighting。
- Automatic mode: icon lighting。
- Cooling mode: icon lighting。
- Function or mode key:
- Timing key:
- "+"key:
- "-"key:
- ON/OFF key:
- **Set temperature settings**

  On the main screen, press or press " " or press " " to adjust the setting temperature.
- **Query and set user parameters(on or off can be set)**
  - ✓ Under the main interface, long press "function" key for 3 seconds to enter the user query interface parameters, press the "+" key or "-" key can inquire the various parameters.

- ✓ In user query interface parameters, the choice of a certain parameter, click on the "function" key to enter the current user parameter Settings interface, the parameter is flashing status, press the "+" key at this time, or "-" key to change the current user parameter values, and then click on the "function" key to confirm change the parameter values, returned to the state parameter query. (Note: The parameter does not blink in the query state; In the setting state, the parameter blinks.
- ✓ The user parameters in the query or user parameter settings interface, such as continuous 30 seconds without keystrokes, automatically save the changed parameter values, and exit the user or the user query interface parameters settings interface, return to the main interface, or press switch machine can be directly back to the main interface.

- **Real-time clock settings**
  - ✓ On the main interface, long press "Timing" after 5 seconds into the real time clock settings interface, clock hour and minute together.
  - ✓ In the real time clock settings screen, click on the "Timing" key, the hour of digital flicker, minute part to stop flashing, press the "+" key at this time, or "-" key , can be the hour of real time clock settings.
  - ✓ When set up small part, then click on the "Timing" key, digital flicker of the minutes, hours part to stop flashing, press the "+" key at this time, or "-" key, can be the minutes of real time clock settings.
  - ✓ When minute part set up, and then click on the "Timing" key, confirm the real time clock settings, and return to the main interface.
  - ✓ In real time clock settings interface, click the "ON/OFF" key, also confirmed that the current real time clock setting, back to the main interface.
  - ✓ In real time clock Settings interface, for 30 seconds without keystrokes, confirm the current real-time clock setting, and return to the main interface.

- **Timing on/off time settings**
  - ✓ Under the main interface, gently press "Timing" key to enter into the timing group Settings interface.
  - ✓ When the timing time setting screen is displayed, timing group 1 blinks. The wire controller has one and two timing groups..
  - ✓ When segment 1 is blinking, press the Timing key to enter the screen for setting the hour part of the timing startup time of group 1. When the number of the hour part of the timing startup time flashes, press the + key or - key to set the startup hour of group 1.
  - ✓ When set good timing boot after hours of, and then click on the "Timing" button, the timing boot time minute part of the digital flash, at this time press "+" or "-" key, is to set up minutes timer 1 group.
  - ✓ After setting the startup time of the scheduled 1 group, press the "Timing" key to enter the shutdown hour setting of the scheduled 1 group. The setting method is the same as above.
  - ✓ When setting up regular shutdown time, press the "Timing" key again, then confirm to save the current group, set the timer switch machine time, at this time press "+" or "-" key, can enter the next set of timer switch machine time settings, set the method consistent with timer 1 group.
  - ✓ If effective timing time group, under the main interface, show the serial number of the regular time.
  - ✓ In a set of timing time settings, if the scheduled startup time and the scheduled shutdown time are the same, the scheduled on/off time of the group is invalid.
  - ✓ When timing segment 1 or 2 blinks, hold down the mode button for 3 seconds to confirm that the timing time is set and blink the timing switch icon.
  - ✓ When timing segment 1 or 2 blinks and the timing switch icon is displayed, hold down the mode button for 3 seconds to close the current setting timing time and the timing switch icon is not displayed.
  - ✓ If no key is pressed on the timing screen for 30 consecutive seconds, confirm the current timing time and return to the home screen.
  - ✓ On the timing screen, press the “ON/OFF” key to confirm the current timing time and return to the main screen.

- **Lock key and unlock**
  - ✓ If the unit for 60 seconds without any input operation, wire control device display screen will enter a dormant state, and automatically locked screen, screen "lock button" icon lit.
  - ✓ Under the lock machine state, click any key to light up the screen, long press the "switch" key for 5 seconds, after the buzzer "Di" sound, release the lock key, "lock key" icon off.

## 5.3 Heat pump parameter comparison table

1. Comparison table of heat pump temperature state query (Users can query, long press the "+" key for 3 seconds to enter, and then press the "+" key and "-" key for up and down page query)

| Parameter umber | Parameter name | Remark |
|---|---|---|
| T1 | Exhaust temperature | |
| T2 | Return gas temperature | |
| T3 | Water inlet temperature | |
| T4 | Water outlet temperature | |
| T5 | Outdoor coil temperature | |
| T6 | Outdoor ambient temperature | |
| 1F | Opening of the main electronic expansion valve | |
| od | Outdoor operation mode | 1:Heating ，2:Cooling |
| OF | Outdoor fan wind speed | AC：1:high wind,2:stroke,3:low wind<br>DC：actual speed (display *10) |
| dF | Defrosting condition | |
| STF | Four-way valve switch | |
| Pu | Water pump switch | |
| HE1 | Fault code history | |
| HE2 | Fault code history | |
| HE3 | Fault code history | |
| HE4 | Fault code history | |
| Pr | Master control protocol version | |
| Sr | Master control protocol version | |

2.Heat pump fault code display table (fault display on the display of wire controller)

| Fault code | Fault description | Remark |
|---|---|---|
| E01 | Exhaust temperature fault | |
| E05 | Coil temperature fault | |
| E09 | Return gas temperature fault | |
| E19 | Water inlet temperature fault | |
| E18 | Water outlet temperature fault | |
| E21 | Communication with the indoor unit fault | |
| E22 | Ambient temperature fault | |
| P01 | Water flow switch fault | |
| P02 | High voltage protection | |
| P06 | Low voltage protection | |
| P11 | High exhaust temperature protection | |
| P15 | Large temperature difference between inlet and outlet water protection | |

| | | |
|---|---|---|
| P16 | Refrigeration under cooling protection | |
| P17 | Standby anti-freezing protection | |
| P25 | Ambient temperature protection | |
| P26 | High temperature protection for heating and discharging water | |
| P27 | Cooling outer coil over temperature protection | |

# PART VI: System and Maintenance

## 6.1. Cautions

1. The operational ambient temperature of heat pump range from 0 to +43°C
2. There is 3 minutes startup delay on compressor during period of heat pump stop and another startup.

**WARNING:**
**It is critical to drain out all the liquid inside water heat exchanger when the ambient air temperature drops to below zero degree Celsius, in case of power failure occurred, or the heat pump is under maintenance, or the heat pump will be stopped for long time, otherwise, it will lead to frozen on water heat exchanger to brake.**

## 6.2. Restart

Before heat pump connects to electricity again after a long time stop, please take cautions:
1. Check on the outside condition of heat pump and clean the heat pump.
2. Clean the hydraulic system.
3. Make sure all the cables are connected tightly.

## 6.3. System Check and Inspection for maintenance

### 6.3.1 Electrical Parts Maintenance

Carry out visual check below items:

1. Electrical isolation test: find out failed touch point. Caution to circuit breaker and fuse, otherwise damage to PCB.
2. Check contactor for its functionality.
3. Brush or dried compressed air for electrical parts and controller de-dust.
4. Check contact touch point.
5. Check terminals for tighten connection.
6. Check aviation plug for tighten connection.

### 6.3.2 Refrigeration System Maintenance

Monthly check should be carried out to see if any abnormal. Periodically check is the only effective action to prevent the happen of failure. When cooling system failed, parameters of cooling system operation can be helpful to the failure judgment.

**Heat Exchanger**

Fin-Tube Heat Exchanger (Air Heat Exchanger)

Air heat exchanger is made of hydrophilic aluminum fin and copper tube. When heat pump is operating, air flow will go through the fin-tube heat exchanger and small particle will stay on the surface of fin-tube heat exchanger, this will lead to insufficiency of heat exchange rate, so it is critical to clean it in order to obtain best efficiency of heat pump. Directly wash it with water or brush on the fin-tube will makes very good clean on it.

Titanium tube-in-Shell Heat Exchanger (Water Heat Exchanger)

Self-clean function in water heat exchanger can be caused by high speed stream inside. However, scale also can be formed because of hard water in high temperature. In this case, the recycling washing with 5% oxalic acid

must be carried out by a pumping station. The cleaning service is not included as ordinary maintenance, please consult the installer.

Ordinary cleaning on heat exchange is a paid service, please consult with installer or dealer.

### 6.3.3 Replacement of Compressor

**WARNNING**

The replace of compressor must be carried out by professional technician with license and proper protection must be applied during the process.

Compressor motor burnt because of isolation failed is minority. It is mostly caused by machinery problem or lack of lubricating, so motor burnt. Periodical inspection and maintenance can be helpful in correcting this problem, so that the maintenance cost can be reduced too.

When periodical inspection is carried out, below items should be paid special attention:

1. Check all the fuse and circuit breaker.
2. Check high/low pressure switch.
3. If failure of compressor happened, check if the failure is caused by machinery or electrical problem.

#### Machinery Problem

If machinery problem has no smell. Please try to rotate the motor, if the machinery problem is happened, compressor must be replaced. In the meantime, the reason of machinery problem must be found to prevent the future failure. The refrigeration system must be cleaned before replacing another new compressor.

#### Electrical Problem

This electrical problem can be judged by smell. If burnt happened, the compressor oil will become black and acid, in this case the cleaning inside refrigeration system must be carried out.

**WARNING**

No cleaning on the refrigeration system processed before replacing new compressor and lead to another burnt on new compressor makes warranty failed.

When compressor is burnt, the drier filter must be replaced too, meanwhile the expansion valve must be check, if it is jammed it is critical to replace expansion valve too. The replacement of compressor and cleaning of refrigeration system must be carried out by professional technician with license.

#### Suggested Procedure of Replacing Compressor

1. Cut off power ;
2. Connect manifold to service valve on suction pipe to recycle the refrigerant.

**WARNING**

Refrigerant must be recycled and well disposal according to law. Refrigerant released to air is harmful to environment and violate law.

3. Disassembly the compressor and electrical connection.
4. Release the suction and exhaust gas copper pipe.
5. Remove the failed compressor.
6. Clean refrigeration system.

**WARNING**

Rubber plug on suction and exhaust pipe of new compressor must not remove before copper pipe brazing. When rubber plug is removed, and expose to air, copper brazing must be carried out within 15min.

7. Locate the new compressor in position, connect copper pipe and brazing, and connect cables.
8. Vacuum the system and charge refrigerant according to the volume listed on nameplate. Vacuum time should no less than 60min and inject nitrogen for pressure maintain for 10min.
9. Carry out inspection on heat pump before trail run of system.
10. Connect to electricity and start up heat pump for observation.

## 6.4. Possible Solution to Failure

When failure or abnormal was found, please refer to below table for possible solution. If it does not help, please disconnect the heat pump from electricity and contact installer or dealer for further solution.

| Status | Possible Cause | Solution |
|---|---|---|
| **Lack/wrong phase** | Lack of phase<br>Wrong phase | Check power supply cable |
| **Disconnect of water flow switch** | Water flow switch failed<br>Insufficient of water flow<br>Air in return pipeline<br>Water pump failed<br>Lack of water | Replace flow switch<br>clean Y-Filter and pipeline<br>Vent out the air<br>Check and recover the water pump<br>Fill water and make sure it is full |
| **High pressure switch failure** | High pressure switch failed<br>Insufficient of water flow<br>System jammed, sensor peel off | Replace high pressure switch<br>increase water flow<br>Check and recover |
| **Low pressure switch failure** | Low pressure switch failed<br>Lack of refrigeration<br>Evaporation dirty or block | Replace the switch<br>Check leakage and refill refrigerant<br>clean evaporation and remove block |
| **Over heat in exhaust gas pipe** | Lack of refrigerant<br>System jammed | Check leakage and refill refrigerant<br>Check and remove the failure |
| **Communication failed** | Plug and socket loosen<br>Cable broken off | Check and tighten<br>Replace the cable |
| **Sensor failure** | Plug and socket loosen<br>Sensor peel off<br>Sensor short<br>Sensor broken | Check and tighten<br>Tighten the sensor<br>Replace the sensor or cable<br>Replace the sensor |
| **Heat pump not operating** | Power failure<br>Power cable loosen<br>Power fuse burnt | Make sure power supply correct<br>Tighten power cable<br>Replace the fuse |
| **Water pump operate but water flow is not good.**<br>**Noise from water pump** | Shut-off valve not opened<br>Air in the pipeline system<br>Y-Filter jammed | Check and open all valves<br>Make sure water is full in pipeline<br>Vent out the air<br>Clean or replace Y-Filter |
| **Low heating capacity** | Lack of refrigerant<br>Insulation on pipeline is poor<br>Evaporator dirty or blocked<br>Y-Filter jammed | Check and refill refrigerant<br>Insulate the pipeline<br>Clean evaporator and remove block<br>Clean Y-Filter |

| | | |
|---|---|---|
| **Compressor doesn't work** | Power failure<br>Power cable loose<br>AC contactor of compressor failed<br>Compressor over-heat or over current | Make sure power supply correct<br>Tighten power cable<br>Replace AC contactor<br>Remove the failure by checking |
| **Compressor make noise** | Liquid enter compressor<br>Compressor part broken | Check expansion valve<br>Replace compressor |
| **Fan doesn't rotate** | Fan screw loosen<br>Fan motor burnt<br>Fan capacitor failed<br>Fan AC contactor broken | Tighten screw<br>Replace motor<br>Replace capacitor<br>Replace AC contactor |
| **Compressor works but HP doesn't refrigerate** | Refrigerant leak out<br>Compressor failed | Check and refill refrigerant<br>Replace compressor |

## FCC STATEMENT

This device complies with Part 15 of the FCC Rules. Operation is subject to the following two conditions:

(1) This device may not cause harmful interference, and

(2) This device must accept any interference received, including interference that may cause undesired operation.

This equipment has been tested and found to comply with the limits for a Class B digital device, pursuant to part 15 of the FCC Rules. These limits are designed to provide reasonable protection against harmful interference in a residential installation. This equipment generates, uses and can radiate radio frequency energy and, if not installed and used in accordance with the instructions, may cause harmful interference to radio communications. However, there is no guarantee that interference will not occur in a particular installation. If this equipment does cause harmful interference to radio or television reception, which can be determined by turning the equipment off and on, the user is encouraged to try to correct the interference by one or more of the following measures:

—Reorient or relocate the receiving antenna.

—Increase the separation between the equipment and receiver.

—Connect the equipment into an outlet on a circuit different from that to which the receiver is connected.

FCC Radiation Exposure Statement:

This equipment complies with FCC radiation exposure limits set forth for an uncontrolled environment. In order to avoid the possibility of exceeding the FCC radio frequency exposure limits, Human proximity to the antenna shall not be less than 20cmduring normal operation.

Caution: Any changes or modi fi cations to this device not explicitly approved by manufacturer could void your authority to operate this equipment.