intertek
Total Quality. Assured.

The Dryer Drawer, LLC

TEST REPORT

SCOPE OF WORK
EMC TESTING–DD-001-001

REPORT NUMBER
240205026GZU-001

ISSUE DATE	**[REVISED DATE]**
26-April-2024	[----------]

PAGES
14

DOCUMENT CONTROL NUMBER
FCC Part 15:2021-a
© 2022 INTERTEK

Room101/301/401/102/202/302/
402/502/602/702/802, No. 7-2,
Caipin Road, Huangpu District,
Guangzhou, Guangdong, China
Telephone: +86 20 8213 9688
Facsimile: +86 20 3205 7538
www.intertek.com.cn

TEST REPORT

Applicant Name & Address	:	The Dryer Drawer, LLC 1916 W Bradley PIace, Chicago, IL 60613
Manufacturing Site	:	Same as applicant
Intertek Report No:		240205026GZU-001
FCC ID	:	2BFCU-DD-001-001

Test standards

CFR 47, FCC Part 15, Subpart B:2021

Sample Description

Product	:	THE Dryer Drawer
Model No.	:	DD-001-001
Electrical Rating	:	12.0VDC 2.0A
Serial No.		Not Labeled
Date Received	:	05 February 2024
Date Test Conducted	:	04 March 2024

Prepared and Checked By

Ace Yao

Engineer

Approved By:

Dean Liu

Sr. Project Engineer

This report is for the exclusive use of Intertek's Client and is provided pursuant to the agreement between Intertek and its Client. Intertek's responsibility and liability are limited to the terms and conditions of the agreement. Intertek assumes no liability to any party, other than to the Client in accordance with the agreement, for any loss, expense or damage occasioned by the use of this report. Only the Client is authorized to permit copying or distribution of this report and then only in its entirety. Any use of the Intertek name or one of its marks for the sale or advertisement of the tested material, product or service must first be approved in writing by Intertek. The observations and test results in this report are relevant only to the sample tested. This report by itself does not imply that the material, product, or service is or has ever been under an Intertek certification program.

TEST REPORT

CONTENT

TEST REPORT 1

CONTENT 3

1. TEST RESULTS SUMMARY 4

2. EMC RESULTS CONCLUSION 5

3. LABORATORY MEASUREMENTS 6

4. EQUIPMENT USED DURING TEST 7

5. EMI TEST 9

5.1 CONDUCTED DISTURBANCE VOLTAGE AT MAINS PORTS 9

5.1.1 Block Diagram of Test Setup 9

5.1.2 Test Setup and Procedure 9

5.1.3 Limit 10

5.1.4 Test Data and curve 10

5.2 RADIATED EMISSION 30 MHZ -1000 MHZ 12

5.2.1 Block Diagram of Test Setup 12

5.2.2 Test Setup and Procedure 12

5.2.3 Limit 13

5.2.4 Test Data and Curve 13

5.3 RADIATED EMISSION ABOVE 1 GHZ 14

TEST REPORT

1. TEST RESULTS SUMMARY

Classification of EUT: Class B

Test Item	Standard	Result
Conducted disturbance voltage at mains ports	**CFR 47, FCC Part 15, Subpart B**	**Pass**
Radiated emission (30 MHz–1 GHz)	**CFR 47, FCC Part 15, Subpart B**	**Pass**
Radiated emission (Above 1 GHz)	**CFR 47, FCC Part 15, Subpart B**	**N/A**
Remark: Reference publication is used for methods of measurement: ANSI C63.4:2014		

Remark:
1. The symbol “N/A” in above table means Not Applicable.
2. When determining the test results, measurement uncertainty of tests has been considered.

TEST REPORT

2. EMC RESULTS CONCLUSION

RE: EMC Testing Pursuant to FCC part 15 performed on the THE Dryer Drawer, Models: DD-001-001.

We tested the THE Dryer Drawer, Model: DD-001-001, to determine if it was in compliance with the relevant standards as marked on the Test Results Summary. We found that the unit met the requirement of FCC part 15 standard when tested as received. The worst case's test data was presented in this test report.

The production units are required to conform to the initial sample as received when the units are placed on the market.

TEST REPORT

3. LABORATORY MEASUREMENTS

Configuration Information

Support Equipment: N/A

Rated Voltage and frequency under test: 120 V~; 60 Hz
Condition of Environment: Temperature: 22~28°C
Relative Humidity:35~60%
Atmosphere Pressure:86~106kPa

Notes:
1. The EMI measurements had been made in the operating mode produced the largest emission in the frequency band being investigated consistent with normal applications. An attempt had been made to maximize the emission by varying the configuration of the EUT.

2. Test Facility accreditation:
A2LA Certificate Number 0078.10
Intertek Testing Services Shenzhen Ltd. Guangzhou Branch is accredited by A2LA and Listed in FCC website. FCC accredited test labs may perform both Certification testing under Parts 15 and 18 and Declaration of Conformity testing.

3. Test Location:
Intertek Testing Services Shenzhen Ltd. Guangzhou Branch
All tests were performed at:
Room101/301/401/102/202/302/402/502/602/702/802, No. 7-2, Caipin Road, Huangpu District, Guangzhou, Guangdong, China
Except Radiated Emissions was performed at:
Room 102/104, No 203, KeZhu Road, Science City, GETDD Guangzhou, China

4. Measurement Uncertainty

No.	Item	Measurement Uncertainty
1	Conducted Emission (9 kHz-150 kHz)	2.54 dB
2	Conducted Emission (150 kHz-30 MHz)	2.56 dB
3	Disturbance Power (30 MHz-300 MHz)	3.13 dB
4	Radiated Emission (9 kHz-30 MHz)	4.15 dB
5	Radiated Emission (30 MHz-1 GHz)	4.62 dB
6	Radiated Emission (1 GHz-6 GHz)	4.67 dB
7	Radiated Emission (6 GHz-18 GHz)	4.76 dB

The measurement uncertainty describes the overall uncertainty of the given measured value during the operation of the EUT.
Measurement uncertainty is calculated in accordance with CISPR16-4-2:2011+A1:2014 +A2:2018.
The measurement uncertainty is given with a confidence of 95%, k=2.
Determination of the test conclusion is based on IEC Guide 115 in consideration of measurement uncertainty.

4. EQUIPMENT USED DURING TEST

Conducted Disturbance-Mains Terminal (1)

Equipment No.	Equipment	Model	Manufacturer	Calibration Interval
EM080-05	EMI receiver	ESCI	R&S	1Y
EM006-05	LISN	ENV216	R&S	1Y
SA047-112	Digital Temperature-Humidity Recorder	RS210	YIJIE	1Y
EM004-04	EMC shield Room	8m×3m×3m	Zhongyu	1Y

Radiated Disturbance（30 MHz-1 GHz）

Equipment No.	Equipment	Model	Manufacturer	Calibration Interval
EM030-04	3m Semi-Anechoic Chamber	9×6×6 m3	ETS-LINDGREN	1Y
EM031-02	EMI Test Receiver (9 kHz~7 GHz)	R&S ESR7	R&S	1Y
EM033-01	TRILOG Super Broadband test Antenna（30 MHz-3 GHz）	VULB 9163	SCHWARZBECK	1Y
EM031-02-01	Coaxial cable	/	R&S	1Y
EM036-01	Common-mode absorbing clamp	CMAD 20B	TESEQ	1Y
SA047-118	Digital Temperature-Humidity Recorder	RS210	YIJIE	1Y
EM045-01-01	EMC32 software (RE/RS)	V10.01.00	R&S	N/A

TEST REPORT

Detail of the equipment calibration due date:

Equipment No.	Cal. Due date (DD-MM-YYYY)
Conducted Disturbance-Mains Terminal (1)	
EM080-05	06/06/2024
EM006-05	06/06/2024
SA047-112	22/10/2024
EM004-04	03/01/2025
Conducted Disturbance-Mains Terminal (2)	
EM031-04	04/01/2025
EM006-06	04/09/2024
SA047-111	22/10/2024
EM004-03	03/01/2025
EM031-04-01	N/A
Conducted Disturbance-Load and Control Terminal (1)	
EM080-05	06/06/2024
EM080-05-01	04/09/2024
SA047-112	22/10/2024
EM004-04	03/01/2025
Conducted Disturbance-Load and Control Terminal (2)	
EM080-05	06/06/2024
EM005-06-01	04/09/2024
SA047-112	22/10/2024
EM004-04	03/01/2025
Conducted Disturbance-Telecom Terminal	
EM080-05	06/06/2024
EM011-05	10/04/2024
EM011-06	10/04/2024
EM006-06	04/09/2024
SA047-112	22/10/2024
EM004-04	03/01/2025
Conducted Disturbance-Antenna Terminal	
EM031-04	04/01/2025
EM084-02	19/07/2024
EM041-01	15/01/2025
EM041-02	15/01/2025
SA047-111	22/10/2024
EM004-03	03/01/2025

Equipment No.	Cal. Due date (DD-MM-YYYY)
Radiated Disturbance (CDN Method)	
EM080-05	06/06/2024
EM003-02	12/11/2024
EM003-03	12/11/2024
EM046-04-03	03/03/2025
EM032-02-01	13/07/2024
EM032-02-02	13/07/2024
SA047-112	22/10/2024
EM004-04	03/01/2025
Radiated electromagnetic disturbances (9 kHz-30 MHz)	
EM031-04	04/01/2025
EM061-04	03/03/2025
SA047-111	22/10/2024
EM004-03	03/01/2025
Radiated Disturbance (9 kHz-30 MHz)	
EM030-04	10/04/2024
EM031-02	15/11/2024
EM011-04	02/07/2024
EM031-02-01	10/04/2024
SA047-118	16/07/2024
EM045-01-01	N/A
Radiated Disturbance (30 MHz-1 GHz)	
EM030-04	10/04/2024
EM031-02	15/11/2024
EM033-01	05/12/2024
EM031-02-01	10/04/2024
EM036-01	17/07/2024
SA047-118	16/07/2024
EM045-01-01	N/A
Radiated Disturbance (1-18 GHz)	
EM030-04	10/04/2024
EM031-02	15/11/2024
EM031-03	12/11/2024
EM033-02	02/07/2024
EM033-02-02	10/04/2024
EM022-03	09/05/2024
SA047-118	16/07/2024
EM045-01-01	N/A

TEST REPORT

5. EMI TEST

5.1 Conducted Disturbance Voltage at mains ports

Test Result: Pass

5.1.1 Block Diagram of Test Setup

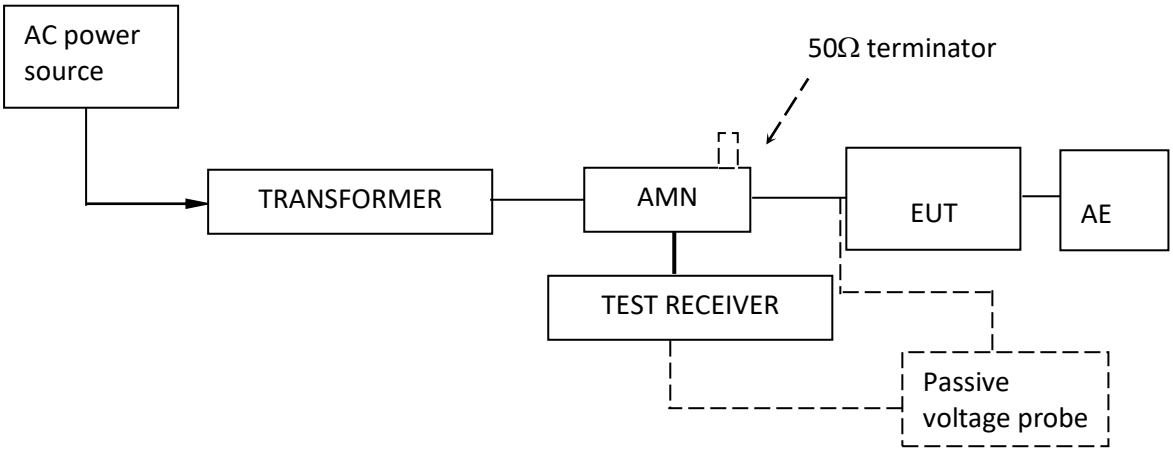

5.1.2 Test Setup and Procedure

The EUT was set to achieve the maximum emission level. The mains terminal disturbance voltage was measured with the EUT in a shielded room. The EUT was connected to AC power source through an Artificial Mains Network which provides a 50Ω linear impedance Artificial hand is used if appropriate (for handheld apparatus). The load/control terminal disturbance voltage was measured with passive voltage probe if appropriate.
The table-top EUT was placed on a 0.8m high non-metallic table above earthed ground plane(Ground Reference Plane).And for floor standing EUT, was placed on a 0.1m high non-metallic supported on GRP. The EUT keeps a distance of at least 0.8m from any other of the metallic surface. The Artificial Mains Network is situated at a distance of 0.8m from the EUT. During the test, mains lead of EUT excess 0.8m was folded back and forth parallel to the lead so as to form a horizontal bundle with a length between 0.3m and 0.4m.
The bandwidth of test receiver was set at 9 kHz. The frequency range from 150 kHz to 30MHz was checked.

TEST REPORT

5.1.3 Limit

Frequency range MHz	AC mains terminals dB (uV)	
	Quasi-peak	Average
0.15 to 0.5	66 to 56*	56 to 46*
0.5 to 5	56	46
5 to 30	60	50
Note 1: The limit decreases linearly with the logarithm of the frequency in the range 0.15 MHz to 0.5 MHz. Note 2: The lower limit is applicable at the transition frequency.		

5.1.4 Test Data and curve

At mains terminal:

Tested Wire: Live **Operation Mode: EUT on**

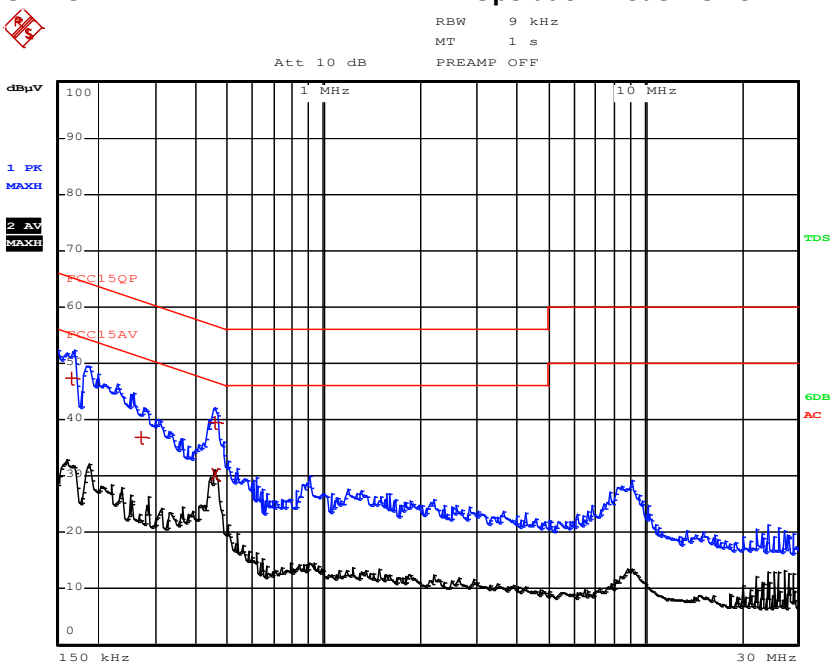

EDIT PEAK LIST (Final Measurement Results)

Trace1: FCC15QP
Trace2: FCC15AV
Trace3: ---

TRACE	FREQUENCY	LEVEL dBµV	DELTA LIMIT dB
1 Quasi Peak	166 kHz	47.24 L1	-17.91
1 Quasi Peak	274 kHz	36.87 L1	-24.12
1 Quasi Peak	458 kHz	39.43 L1	-17.29
2 CISPR Average	458 kHz	30.26 L1	-16.46

Remark:
1. Corr. (dB) = LISN Factor (dB) + Cable Loss (dB)
2. Level (dBµV) = Corr. (dB) + Read Level (dBµV)
3. Delta Limit (dB) = Level (dBµV)-Limit (dBµV)

TEST REPORT

Tested Wire: Neutral **Operation Mode: EUT on**

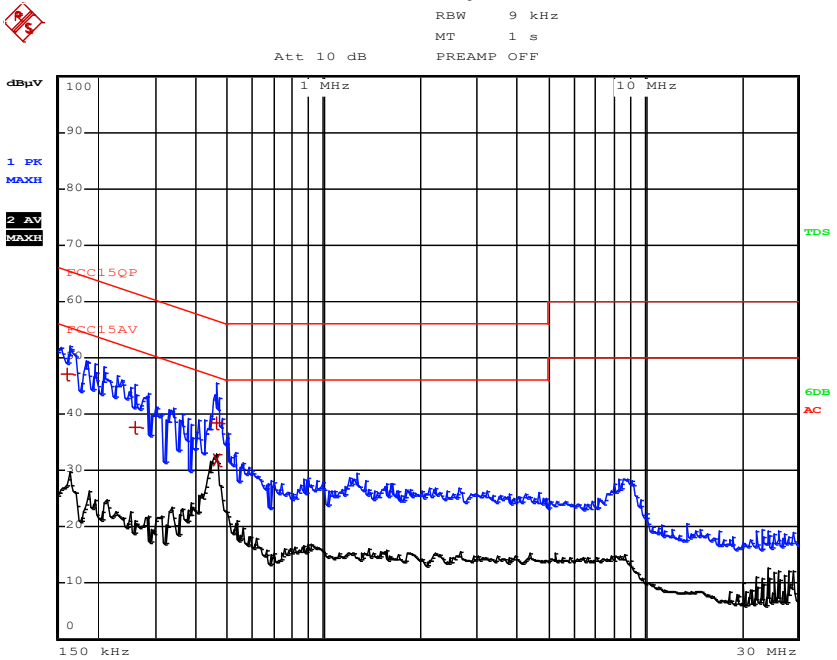

EDIT PEAK LIST (Final Measurement Results)

Trace1:	FCC15QP
Trace2:	FCC15AV
Trace3:	---

TRACE	FREQUENCY	LEVEL dBµV	DELTA LIMIT dB
1 Quasi Peak	162 kHz	47.19 L1	-18.16
1 Quasi Peak	258 kHz	37.63 L1	-23.86
1 Quasi Peak	462 kHz	38.55 L1	-18.09
2 CISPR Average	462 kHz	31.85 L1	-14.80

Remark:
1. Corr. (dB) = LISN Factor (dB) + Cable Loss (dB)
2. Level (dBµV) = Corr. (dB) + Read Level (dBµV)
3. Delta Limit (dB) = Level (dBµV)-Limit (dBµV)

TEST REPORT

5.2 Radiated Emission 30 MHz -1000 MHz

Test Result: Pass

5.2.1 Block Diagram of Test Setup

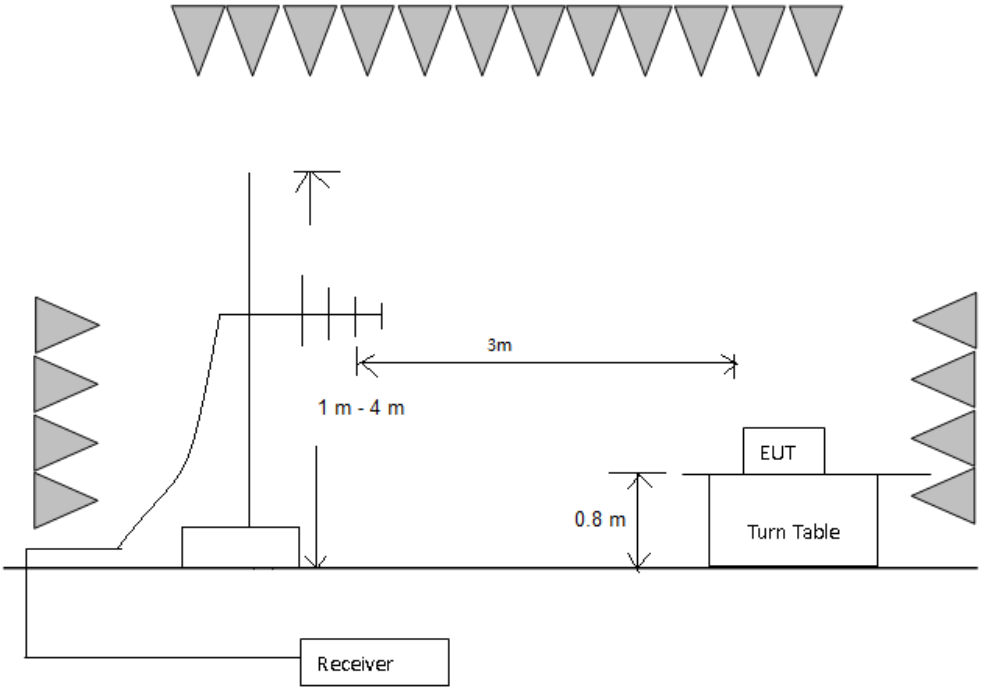

5.2.2 Test Setup and Procedure

The measurement was applied in a semi-anechoic chamber. The EUT and simulators were placed on a 0.8 m high foamed table above the horizontal metal ground plane. The turn table rotated 360 degrees to determine the position of the maximum emission level. The EUT was set 3 meters away from the receiving antenna which was mounted on an antenna mask. The antenna moved up and down between from 1 meter to 4 meters to find out the maximum emission level.

Broadband antenna was used as receiving antenna. Both horizontal and vertical polarization of the antenna was set on measurement. In order to find the maximum emission, all of the interface cables were manipulated according to ANSI C63.4 requirement during radiated test. The bandwidth setting on R&S Test Receiver was 120 kHz.

For an unintentional radiator, including a digital device, the spectrum shall be investigated from the lowest radio frequency signal generated or used in the device, without going below the lowest frequency for which a radiated emission limit is specified, up to the frequency shown in the following table:

TEST REPORT

Highest frequency generated or used in the device or on which the device operates or tunes (MHz)	Upper Frequency of Radiated Measurement
Below 1.705 MHz	30MHz
1.705 MHz – 108 MHz	1 GHz
108 MHz – 500 MHz	2 GHz
500 MHz – 1 GHz	5 GHz
Above 1 GHz	5th harmonic of the highest frequency or 40 GHz, whichever is lower.
At transitional frequencies the lower limit applies.	

Remark: Radiated Emission was performed from 30 MHz to 1 GHz.

5.2.3 Limit

Class B limit at 3m test distance:

Frequency range MHz	Quasi-peak limits dB (µV/m)
30 to 88	40
88 to 216	43.5
216 to 960	46
960 to 1000	54
At transitional frequencies the lower limit applies.	

5.2.4 Test Data and Curve

Operation Mode: EUT ON
Horizontal

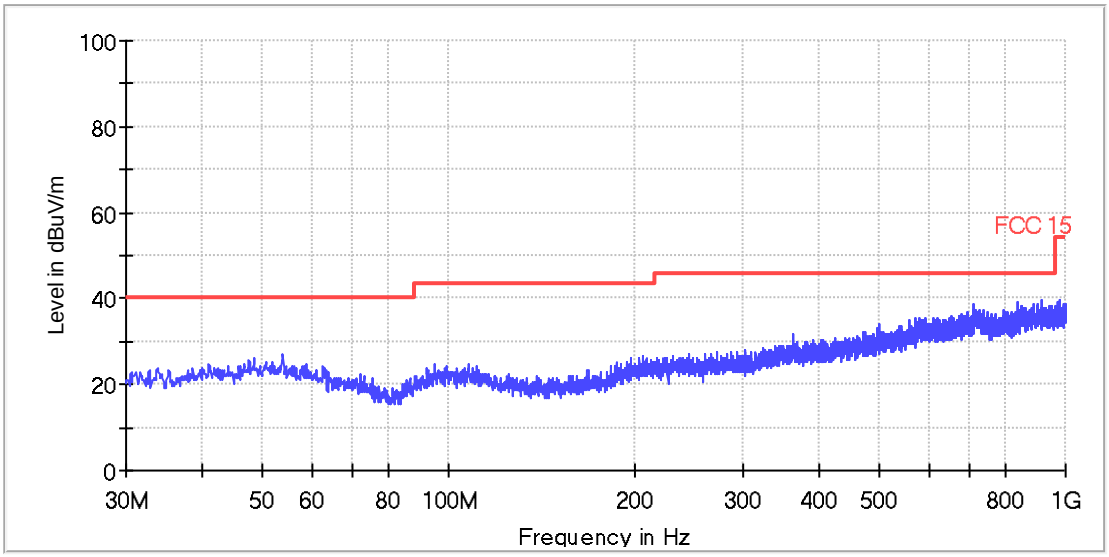

All emission levels are more than 6 dB below the limit.

TEST REPORT

Vertical

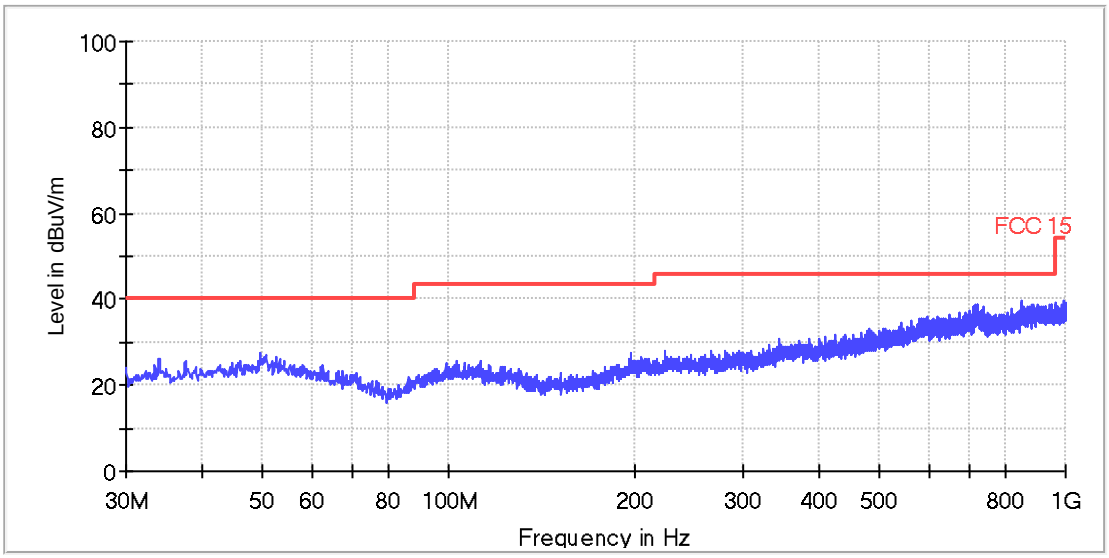

All emission levels are more than 6 dB below the limit.

5.3 Radiated Emission above 1 GHz

Test Result: Not Applicable
Remark:
The highest internal source of the EUT is not more than 108 MHz, so the measurement above 1000 MHz is not applicable.

**********End of Report**********