A 105mm B 105mm C 105mm D 105mm

SESAME 6 Pro Smart lock

Installation method

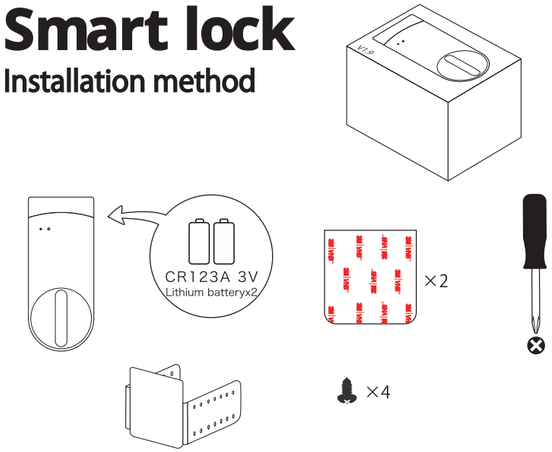

1

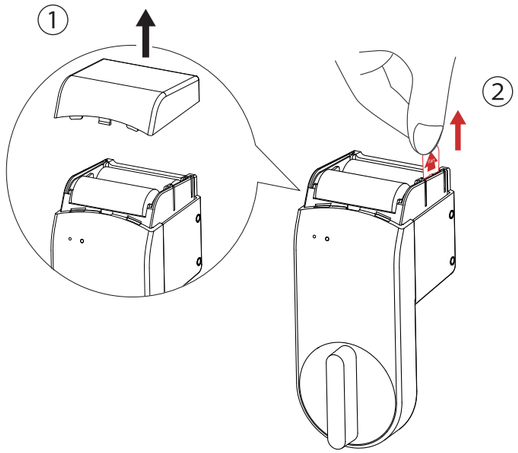

2

3

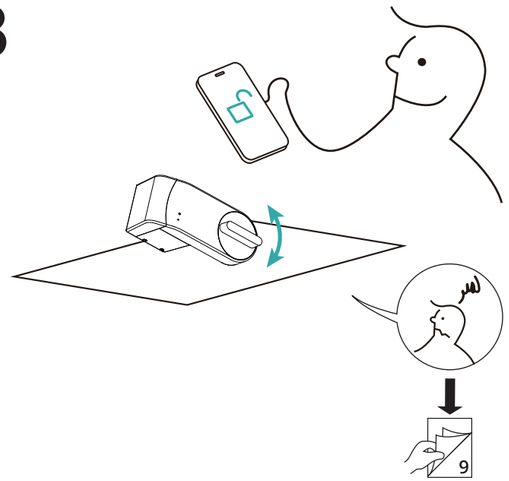

Before installing Sesame on the door, please check if it can be operated via the app.

4

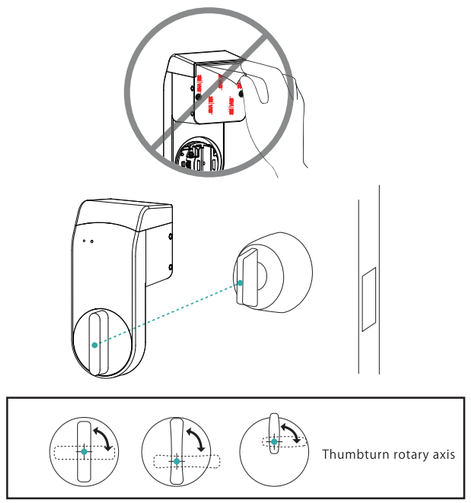

5

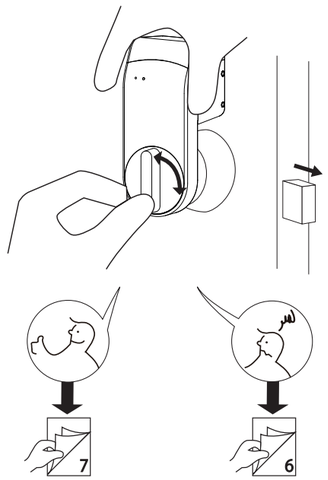

Please try holding Sesame up to the lock and check if the key turns smoothly.

48mm 48mm 48mm 48mm

E F G H

D’ 105mm C’ 105mm B’ 105mm A’ 105mm

6

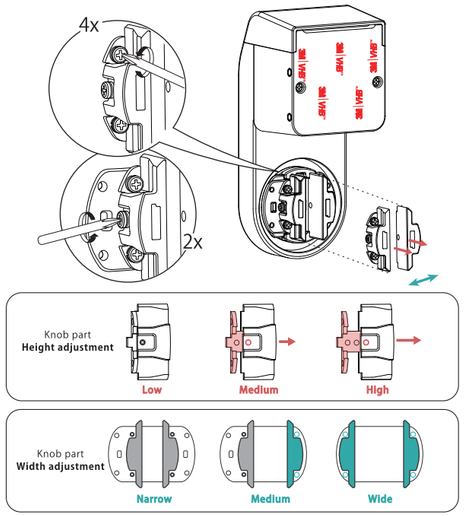

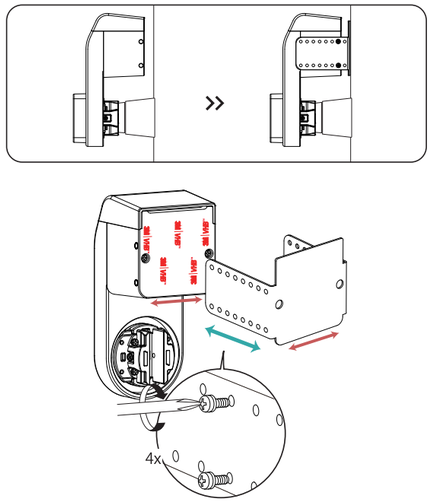

7

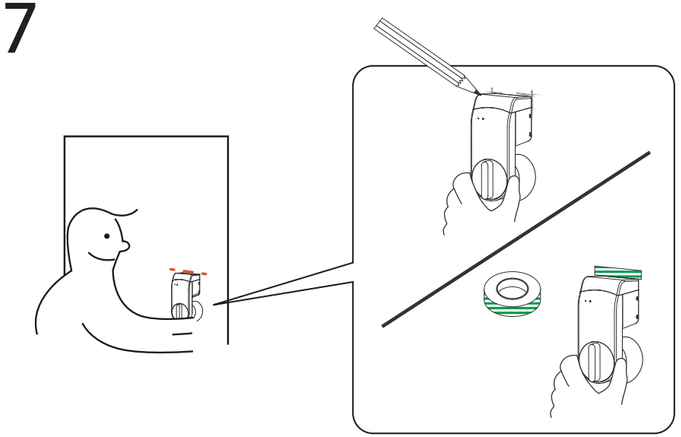

8

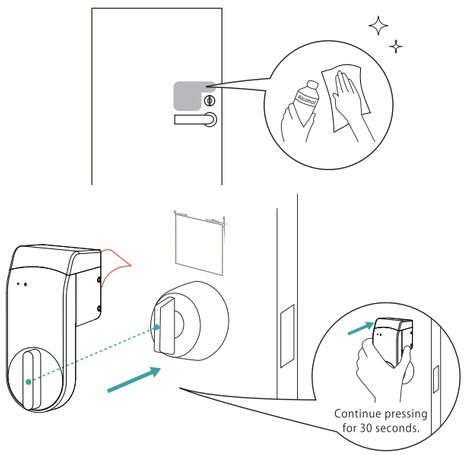

⚠ Once removed, the adhesive strength decreases by 70%, so please replace with a new 3M tape each time.

9 <Reset>

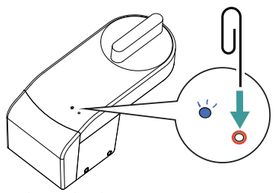

Press and hold the reset button until the blue light turns on, and continue pressing for about 2 seconds until the light turns off to complete the reset.

<Remove>

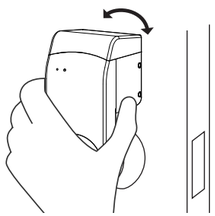

Grasp the upper part of the main unit and twist it slightly parallel to the door surface.

SESAME
Installation method

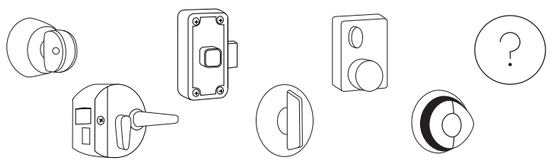

SESAME
Method of installing the special adapter

48mm 48mm 48mm 48mm

H’ G’ F’ E’

Federal Communications Commission (FCC) Statement.

This device complies with part 15 of the FCC Rules. Operation is subject to the following two conditions:

(1) This device may not cause harmful interference, and

(2) this device must accept any interference received, including interference that may cause undesired operation.

Note: This equipment has been tested and found to comply with the limits for a Class B digital device, pursuant to part 15 of the FCC Rules. These limits are designed to provide Reasonable protection against harmful interference in a residential installation. This equipment generates, uses and can radiate radio frequency energy and, if not installed and used in accordance with the instructions, may cause harmful interference to radio communications. However, there is no guarantee that interference will not occur in a particular installation. If this equipment does cause harmful interference to radio or television reception, which can be determined by turning the equipment off and on, the user is encouraged to try to correct the interference by one or more of the following measures:

•Reorient or relocate the receiving antenna.

•Increase the separation between the equipment and receiver.

•Connect the equipment into an outlet on a circuit different from that to which the receiver is connected.

•Consult the dealer or an experienced radio/TV technician for help.

Warning: Changes or modifications not expressly approved by the party responsible for compliance could void the user's authority to operate the equipment.

Note: The manufacturer is not responsible for any radio or TV interference caused by unauthorized modifications to this equipment. Such modifications could void the user’s authority to operate the equipment.

RF exposure statement:

This device complies with FCC RF radiation exposure limits set forth for an uncontrolled environment. The device is installed and operated without restriction.