ESP32-WROOM-32E
ESP32-WROOM-32UE

Datasheet

2.4 GHz Wi-Fi + Bluetooth® + Bluetooth LE module
Built around ESP32 series of SoCs, Xtensa® dual-core 32-bit LX6 microprocessor
4/8/16 MB flash available
26 GPIOs, rich set of peripherals
On-board PCB antenna or external antenna connector

1 Module Overview

1.1 Features

CPU and On-Chip Memory

- ESP32-D0WD-V3 or ESP32-D0WDR2-V3 embedded, Xtensa dual-core 32-bit LX6 microprocessor, up to 240 MHz
- 448 KB ROM
- 520 KB SRAM
- 16 KB SRAM in RTC
- ESP32-D0WDR2-V3 also provides 2 MB PSRAM

Wi-Fi

- 802.11b/g/n
- Bit rate: 802.11n up to 150 Mbps
- A-MPDU and A-MSDU aggregation
- 0.4 μs guard interval support
- Center frequency range of operating channel: 2412 ~ 2462 MHz

Bluetooth

- Bluetooth V4.2 BR/EDR and Bluetooth LE specification
- AFH
- CVSD and SBC

Peripherals

- SD card, UART, SPI, SDIO, I2C, LED PWM, Motor PWM, I2S, IR, pulse counter, GPIO, capacitive touch sensor, ADC, DAC, TWAI® (compatible with ISO 11898-1, i.e. CAN Specification 2.0)

Integrated Components on Module

- 40 MHz crystal oscillator
- 4/8/16 MB SPI flash

Antenna Options

- ESP32-WROOM-32E: On-board PCB antenna
- ESP32-WROOM-32UE: external antenna via a connector

Operating Conditions

- Operating voltage/Power supply: 3.0 ~ 3.6 V
- Operating ambient temperature:
  - 85 °C version: –40 ~ 85 °C
  - 105 °C version: –40 ~ 105 °C. Note that only the modules embedded with a 4/8 MB flash support this version.

Certification

- Bluetooth certification: BQB
- Green certification: REACH/RoHS

Reliability Test

- HTOL/HTSL/uHAST/TCT/ESD

1.2 Description

ESP32-WROOM-32E and ESP32-WROOM-32UE are two powerful, generic Wi-Fi + Bluetooth + Bluetooth LE MCU modules that target a wide variety of applications, ranging from low-power sensor networks to the most demanding tasks, such as voice encoding, music streaming and MP3 decoding.

ESP32-WROOM-32E comes with a PCB antenna, and ESP32-WROOM-32UE with a connector for an external antenna. **The information in this datasheet is applicable to both modules.**

The Series Comparison for the two modules is as follows:

Table 1: ESP32-WROOM-32E Series Comparison[1]

Ordering Code	Flash	PSRAM	Ambient Temp.[2] (°C)	Size[3] (mm)
ESP32-WROOM-32E-N4	4 MB (Quad SPI)	—	–40 ~ 85	18.0 × 25.5 × 3.1
ESP32-WROOM-32E-N8	8 MB (Quad SPI)	—	–40 ~ 85	
ESP32-WROOM-32E-N16	16 MB (Quad SPI)	—	–40 ~ 85	
ESP32-WROOM-32E-H4	4 MB (Quad SPI)	—	–40 ~ 105	
ESP32-WROOM-32E-H8	8 MB (Quad SPI)	—	–40 ~ 105	
ESP32-WROOM-32E-N4R2	4 MB (Quad SPI)	2 MB (Quad SPI)[4]	–40 ~ 85	
ESP32-WROOM-32E-N8R2	8 MB (Quad SPI)	2 MB (Quad SPI)[4]	–40 ~ 85	
ESP32-WROOM-32E-N16R2	16 MB (Quad SPI)	2 MB (Quad SPI)[4]	–40 ~ 85	

[1] This table shares the same notes presented in the table 2 below.

Table 2: ESP32-WROOM-32UE Series Comparison

Ordering Code	Flash	PSRAM	Ambient Temp.[2] (°C)	Size[3] (mm)
ESP32-WROOM-32UE-N4	4 MB (Quad SPI)	—	–40 ~ 85	18.0 × 19.2 × 3.2
ESP32-WROOM-32UE-N8	8 MB (Quad SPI)	—	–40 ~ 85	
ESP32-WROOM-32UE-N16	16 MB (Quad SPI)	—	–40 ~ 85	
ESP32-WROOM-32UE-H4	4 MB (Quad SPI)	—	–40 ~ 105	
ESP32-WROOM-32UE-H8	8 MB (Quad SPI)	—	–40 ~ 105	
ESP32-WROOM-32UE-N4R2	4 MB (Quad SPI)	2 MB (Quad SPI)[4]	–40 ~ 85	
ESP32-WROOM-32UE-N8R2	8 MB (Quad SPI)	2 MB (Quad SPI)[4]	–40 ~ 85	
ESP32-WROOM-32UE-N16R2	16 MB (Quad SPI)	2 MB (Quad SPI)[4]	–40 ~ 85	

[2] Ambient temperature specifies the recommended temperature range of the environment immediately outside the Espressif module.

[3] For details, refer to Section 7.1 *Physical Dimensions*.

[4] This module uses PSRAM integrated in the chip's package.

At the core of the module is the ESP32-D0WD-V3 chip or ESP32-D0WDR2-V3 chip*. The chip embedded is designed to be scalable and adaptive. There are two CPU cores that can be individually controlled, and the CPU clock frequency is adjustable from 80 MHz to 240 MHz. The chip also has a low-power coprocessor that can be used instead of the CPU to save power while performing tasks that do not require much computing power, such as monitoring of peripherals. ESP32 integrates a rich set of peripherals, ranging from capacitive touch sensors,

SD card interface, Ethernet, high-speed SPI, UART, I2S, and I2C.

The integration of Bluetooth, Bluetooth LE and Wi-Fi ensures that a wide range of applications can be targeted, and that the module is all-around: using Wi-Fi allows a large physical range and direct connection to the Internet through a Wi-Fi router, while using Bluetooth allows the user to conveniently connect to the phone or broadcast low energy beacons for its detection. The sleep current of the ESP32 chip is less than 5 μA, making it suitable for battery powered and wearable electronics applications. The module supports a data rate of up to 150 Mbps, and 20 dBm output power at the antenna to ensure the widest physical range. As such the module does offer industry-leading specifications and the best performance for electronic integration, range, power consumption, and connectivity.

The operating system chosen for ESP32 is freeRTOS with LwIP; TLS 1.2 with hardware acceleration is built in as well. Secure (encrypted) over the air (OTA) upgrade is also supported, so that users can upgrade their products even after their release, at minimum cost and effort.

1.3 Applications

- Generic Low-power IoT Sensor Hub
- Generic Low-power IoT Data Loggers
- Cameras for Video Streaming
- Over-the-top (OTT) Devices
- Speech Recognition
- Image Recognition
- Mesh Network
- Home Automation
- Smart Building
- Industrial Automation
- Smart Agriculture
- Audio Applications
- Health Care Applications
- Wi-Fi-enabled Toys
- Wearable Electronics
- Retail & Catering Applications

2 Pin Definitions

2.1 Pin Layout

The pin layout of ESP32-WROOM-32UE is the same as that of ESP32-WROOM-32E, except that ESP32-WROOM-32UE has no keepout zone.

The pin diagram below shows the approximate location of pins on the module. For the actual diagram drawn to scale, please refer to Figure 7.1 *Physical Dimensions*.

2.2 Pin Description

The module has 38 pins. See pin definitions in Table 3.

For peripheral pin configurations, please refer to *ESP32 Series Datasheet*.

Table 3: Pin Definitions

Name	No.	Type[1]	Function
GND	1	P	Ground
3V3	2	P	Power supply
EN	3	I	High: On; enables the chip Low: Off; the chip shuts down Note: Do not leave the pin floating.
SENSOR_VP	4	I	GPIO36, ADC1_CH0, RTC_GPIO0
SENSOR_VN	5	I	GPIO39, ADC1_CH3, RTC_GPIO3
IO34	6	I	GPIO34, ADC1_CH6, RTC_GPIO4
IO35	7	I	GPIO35, ADC1_CH7, RTC_GPIO5
IO32	8	I/O	GPIO32, XTAL_32K_P (32.768 kHz crystal oscillator input), ADC1_CH4, TOUCH9, RTC_GPIO9
IO33	9	I/O	GPIO33, XTAL_32K_N (32.768 kHz crystal oscillator output), ADC1_CH5, TOUCH8, RTC_GPIO8
IO25	10	I/O	GPIO25, DAC_1, ADC2_CH8, RTC_GPIO6, EMAC_RXD0
IO26	11	I/O	GPIO26, DAC_2, ADC2_CH9, RTC_GPIO7, EMAC_RXD1
IO27	12	I/O	GPIO27, ADC2_CH7, TOUCH7, RTC_GPIO17, EMAC_RX_DV
IO14	13	I/O	GPIO14, ADC2_CH6, TOUCH6, RTC_GPIO16, MTMS, HSPICLK, HS2_CLK, SD_CLK, EMAC_TXD2
IO12	14	I/O	GPIO12, ADC2_CH5, TOUCH5, RTC_GPIO15, MTDI, HSPIQ, HS2_DATA2, SD_DATA2, EMAC_TXD3
GND	15	P	Ground
IO13	16	I/O	GPIO13, ADC2_CH4, TOUCH4, RTC_GPIO14, MTCK, HSPID, HS2_DATA3, SD_DATA3, EMAC_RX_ER
NC	17	-	See note [2]
NC	18	-	See note [2]
NC	19	-	See note [2]
NC	20	-	See note [2]
NC	21	-	See note [2]
NC	22	-	See note [2]
IO15	23	I/O	GPIO15, ADC2_CH3, TOUCH3, MTDO, HSPICS0, RTC_GPIO13, HS2_CMD, SD_CMD, EMAC_RXD3
IO2	24	I/O	GPIO2, ADC2_CH2, TOUCH2, RTC_GPIO12, HSPIWP, HS2_DATA0, SD_DATA0
IO0	25	I/O	GPIO0, ADC2_CH1, TOUCH1, RTC_GPIO11, CLK_OUT1, EMAC_TX_CLK
IO4	26	I/O	GPIO4, ADC2_CH0, TOUCH0, RTC_GPIO10, HSPIHD, HS2_DATA1, SD_DATA1, EMAC_TX_ER
IO16[3]	27	I/O	GPIO16, HS1_DATA4, U2RXD, EMAC_CLK_OUT
IO17	28	I/O	GPIO17, HS1_DATA5, U2TXD, EMAC_CLK_OUT_180
IO5	29	I/O	GPIO5, VSPICS0, HS1_DATA6, EMAC_RX_CLK
IO18	30	I/O	GPIO18, VSPICLK, HS1_DATA7

Table 3 – cont'd from previous page

Name	No.	Type[1]	Function
IO19	31	I/O	GPIO19, VSPIQ, U0CTS, EMAC_TXD0
NC	32	-	-
IO21	33	I/O	GPIO21, VSPIHD, EMAC_TX_EN
RXD0	34	I/O	GPIO3, U0RXD, CLK_OUT2
TXD0	35	I/O	GPIO1, U0TXD, CLK_OUT3, EMAC_RXD2
IO22	36	I/O	GPIO22, VSPIWP, U0RTS, EMAC_TXD1
IO23	37	I/O	GPIO23, VSPID, HS1_STROBE
GND	38	P	Ground

[1] P: power supply; I: input; O: output.

[2] Pins GPIO6 to GPIO11 on the ESP32-D0WD-V3/ESP32-D0WDR2-V3 chip are connected to the SPI flash integrated on the module and are not led out.

[3] In module variants that have embedded QSPI PSRAM, i.e., that embed ESP32-D0WDR2-V3, IO16 is connected to the embedded PSRAM and can not be used for other functions.

2.3 Strapping Pins

ESP32 has five strapping pins:

- MTDI
- GPIO0
- GPIO2
- MTDO
- GPIO5

Software can read the values of these five bits from register "GPIO_STRAPPING".

During the chip's system reset release (power-on-reset, RTC watchdog reset and brownout reset), the latches of the strapping pins sample the voltage level as strapping bits of "0" or "1", and hold these bits until the chip is powered down or shut down. The strapping bits configure the device's boot mode, the operating voltage of VDD_SDIO and other initial system settings.

Each strapping pin is connected to its internal pull-up/pull-down during the chip reset. Consequently, if a strapping pin is unconnected or the connected external circuit is high-impedance, the internal weak pull-up/pull-down will determine the default input level of the strapping pins.

To change the strapping bit values, users can apply the external pull-down/pull-up resistances, or use the host MCU's GPIOs to control the voltage level of these pins when powering on ESP32.

After reset release, the strapping pins work as normal-function pins.

Refer to Table 4 for a detailed boot-mode configuration by strapping pins.

Table 4: Strapping Pins

Voltage of Internal LDO (VDD_SDIO)					
Pin	Default	3.3 V		1.8 V	
MTDI	Pull-down	0		1	
Booting Mode					
Pin	Default	SPI Boot		Download Boot	
GPIO0	Pull-up	1		0	
GPIO2	Pull-down	Don't-care		0	
Enabling/Disabling Debugging Log Print over U0TXD During Booting					
Pin	Default	U0TXD Active		U0TXD Silent	
MTDO	Pull-up	1		0	
Timing of SDIO Slave					
Pin	Default	FE Sampling FE Output	FE Sampling RE Output	RE Sampling FE Output	RE Sampling RE Output
MTDO	Pull-up	0	0	1	1
GPIO5	Pull-up	0	1	0	1

* FE: falling-edge, RE: rising-edge
* Firmware can configure register bits to change the settings of "Voltage of Internal LDO (VDD_SDIO)" and "Timing of SDIO Slave", after booting.
* The module integrates a 3.3 V SPI flash, so the pin MTDI cannot be set to 1 when the module is powered up.

The illustration below shows the setup and hold times for the strapping pins before and after the CHIP_PU signal goes high. Details about the parameters are listed in Table 5.

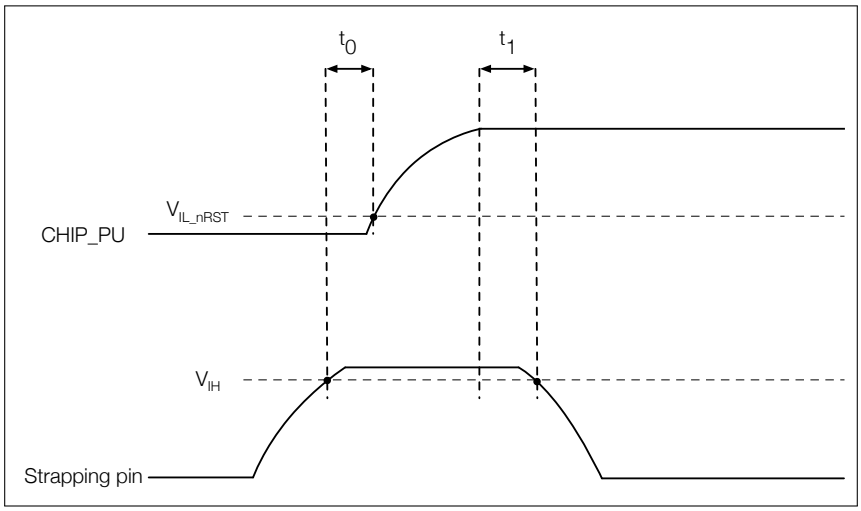

Figure 4: Setup and Hold Times for the Strapping Pins

Table 5: Parameter Descriptions of Setup and Hold Times for the Strapping Pins

Parameters	Description	Min.	Unit
t_0	Setup time before CHIP_PU goes from low to high	0	ms
t_1	Hold time after CHIP_PU goes high	1	ms

3 Electrical Characteristics

3.1 Absolute Maximum Ratings

Stresses above those listed in *Absolute Maximum Ratings* may cause permanent damage to the device. These are stress ratings only and functional operation of the device at these or any other conditions beyond those indicated under *Recommended Operating Conditions* is not implied. Exposure to absolute-maximum-rated conditions for extended periods may affect device reliability.

Table 6: Absolute Maximum Ratings

Symbol	Parameter	Min	Max	Unit
VDD33	Power supply voltage	–0.3	3.6	V
T_{STORE}	Storage temperature	–40	105	°C

* Please see Appendix IO MUX of *ESP32 Series Datasheet* for IO's power domain.

3.2 Recommended Operating Conditions

Table 7: Recommended Operating Conditions

Symbol	Parameter		Min	Typ	Max	Unit
VDD33	Power supply voltage		3.0	3.3	3.6	V
I_{VDD}	Current delivered by external power supply		0.5	—	—	A
T	Operating ambient temperature	85 °C version	–40	—	85	°C
		105 °C version			105	

3.3 DC Characteristics (3.3 V, 25 °C)

Table 8: DC Characteristics (3.3 V, 25 °C)

Symbol	Parameter	Min	Typ	Max	Unit
C_{IN}	Pin capacitance	—	2	—	pF
V_{IH}	High-level input voltage	0.75 × VDD[1]	—	VDD[1]+ 0.3	V
V_{IL}	Low-level input voltage	–0.3	—	0.25 × VDD[1]	V
I_{IH}	High-level input current	—	—	50	nA
I_{IL}	Low-level input current	—	—	50	nA
V_{OH}	High-level output voltage	0.8 × VDD[1]	—	—	V
V_{OL}	Low-level output voltage	—	—	0.1 × VDD[1]	V

Cont'd on next page

Table 8 – cont'd from previous page

Symbol	Parameter		Min	Typ	Max	Unit
I_{OH}	High-level source current (VDD[1]= 3.3 V, V_{OH} >= 2.64 V, output drive strength set to the maximum)	VDD3P3_CPU power domain [1, 2]	—	40	—	mA
		VDD3P3_RTC power domain [1, 2]	—	40	—	mA
		VDD_SDIO power domain [1, 3]	—	20	—	mA
I_{OL}	Low-level sink current (VDD[1]= 3.3 V, V_{OL} = 0.495 V, output drive strength set to the maximum)		—	28	—	mA
R_{PU}	Resistance of internal pull-up resistor		—	45	—	kΩ
R_{PD}	Resistance of internal pull-down resistor		—	45	—	kΩ
V_{IL_nRST}	Low-level input voltage of CHIP_PU to shut down the chip		—	—	0.6	V

[1] Please see Appendix IO MUX of *ESP32 Series Datasheet* for IO's power domain. VDD is the I/O voltage for a particular power domain of pins.

[2] For VDD3P3_CPU and VDD3P3_RTC power domain, per-pin current sourced in the same domain is gradually reduced from around 40 mA to around 29 mA, V_{OH}>=2.64 V, as the number of current-source pins increases.

[3] Pins occupied by flash and/or PSRAM in the VDD_SDIO power domain were excluded from the test.

3.4 Current Consumption Characteristics

Owing to the use of advanced power-management technologies, the module can switch between different power modes. For details on different power modes, please refer to Section *RTC and Low-Power Management* in *ESP32 Series Datasheet*.

Table 9: Current Consumption Depending on RF Modes

Work mode	Description		Average (mA)	Peak (mA)
Active (RF working)	TX	802.11b, 20 MHz, 1 Mbps, @19.5 dBm	239	379
		802.11g, 20 MHz, 54 Mbps, @15 dBm	190	276
		802.11n, 20 MHz, MCS7, @13 dBm	183	258
		802.11n, 40 MHz, MCS7, @13 dBm	165	211
	RX	802.11b/g/n, 20 MHz	112	112
		802.11n, 40 MHz	118	118

[1] The current consumption measurements are taken with a 3.3 V supply at 25 °C of ambient temperature at the RF port. All transmitters' measurements are based on a 50% duty cycle.

[2] The current consumption figures for in RX mode are for cases when the peripherals are disabled and the CPU idle.

3.5 Wi-Fi RF Characteristics

3.5.1 Wi-Fi RF Standards

Table 10: Wi-Fi RF Standards

Name		Description
Center frequency range of operating channel		2412~2462 MHz(802.11b/g/n20), 2422~2452 MHz(802.11n40)
Wi-Fi wireless standard		IEEE 802.11b/g/n
Data rate	20 MHz	11b: 1, 2, 5.5, 11 Mbps 11g: 6, 9, 12, 18, 24, 36, 48, 54 Mbps 11n: MCS0-7, 72.2 Mbps (Max)
	40 MHz	11n: MCS0-7, 150 Mbps (Max)
Antenna type		external antenna[2]

[1] Device should operate in the center frequency range allocated by regional regulatory authorities. Target center frequency range is configurable by software.

[2] For the modules that use external antennas, the output impedance is 50 Ω. For other modules without external antennas, the output impedance is irrelevant.

3.5.2 Transmitter Characteristics

Target TX power is configurable based on device or certification requirements. The default characteristics are provided in Table 11.

Table 11: TX Power Characteristics

Rate	Typ (dBm)
11b, 1 Mbps	20.35
11g, 6 Mbps	22.22
11n, HT20, MCS0	22.71
11n, HT40, MCS0	22.42

3.5.3 Receiver Characteristics

Table 12: RX Sensitivity Characteristics

Rate	Typ (dBm)
1 Mbps	–97
2 Mbps	–94
5.5 Mbps	–92
11 Mbps	–88

Cont'd on next page

Table 12 – cont'd from previous page

Rate	Typ (dBm)
6 Mbps	–93
9 Mbps	–91
12 Mbps	–89
18 Mbps	–87
24 Mbps	–84
36 Mbps	–80
48 Mbps	–77
54 Mbps	–75
11n, HT20, MCS0	–92
11n, HT20, MCS1	–88
11n, HT20, MCS2	–86
11n, HT20, MCS3	–83
11n, HT20, MCS4	–80
11n, HT20, MCS5	–76
11n, HT20, MCS6	–74
11n, HT20, MCS7	–72
11n, HT40, MCS0	–89
11n, HT40, MCS1	–85
11n, HT40, MCS2	–83
11n, HT40, MCS3	–80
11n, HT40, MCS4	–76
11n, HT40, MCS5	–72
11n, HT40, MCS6	–71
11n, HT40, MCS7	–69

Table 13: RX Maximum Input Level

Rate	Typ (dBm)
11b, 1 Mbps	5
11b, 11 Mbps	5
11g, 6 Mbps	0
11g, 54 Mbps	–8
11n, HT20, MCS0	0
11n, HT20, MCS7	–8
11n, HT40, MCS0	0
11n, HT40, MCS7	–8

Table 14: Adjacent Channel Rejection

Rate	Typ (dB)
11b, 11 Mbps	35
11g, 6 Mbps	27

Cont'd on next page

Table 14 – cont'd from previous page

Rate	Typ (dB)
11g, 54 Mbps	13
11n, HT20, MCS0	27
11n, HT20, MCS7	12
11n, HT40, MCS0	16
11n, HT40, MCS7	7

3.6 Bluetooth Radio

3.6.1 Receiver – Basic Data Rate

Table 15: Receiver Characteristics – Basic Data Rate

Parameter	Conditions	Min	Typ	Max	Unit
Sensitivity @0.1% BER	—	–90	–89	–88	dBm
Maximum received signal @0.1% BER	—	0	—	—	dBm
Co-channel C/I	—	—	+7	—	dB
Adjacent channel selectivity C/I	F = F0 + 1 MHz	—	—	–6	dB
	F = F0 – 1 MHz	—	—	–6	dB
	F = F0 + 2 MHz	—	—	–25	dB
	F = F0 – 2 MHz	—	—	–33	dB
	F = F0 + 3 MHz	—	—	–25	dB
	F = F0 – 3 MHz	—	—	–45	dB
Out-of-band blocking performance	30 MHz ~ 2000 MHz	–10	—	—	dBm
	2000 MHz ~ 2400 MHz	–27	—	—	dBm
	2500 MHz ~ 3000 MHz	–27	—	—	dBm
	3000 MHz ~ 12.5 GHz	–10	—	—	dBm
Intermodulation	—	–36	—	—	dBm

3.6.2 Transmitter – Basic Data Rate

Table 16: Transmitter Characteristics – Basic Data Rate

Parameter	Conditions	Min	Typ	Max	Unit
+20 dB bandwidth	—	—	0.9	—	MHz
Adjacent channel transmit power	F = F0 ± 2 MHz	—	–55	—	dBm
	F = F0 ± 3 MHz	—	–55	—	dBm
	F = F0 ± > 3 MHz	—	–59	—	dBm
$\Delta f1_{avg}$	—	—	—	155	kHz
$\Delta f2_{max}$	—	127	—	—	kHz

Table 16 – cont'd from previous page

Parameter	Conditions	Min	Typ	Max	Unit
$\Delta f2_{avg}/\Delta f1_{avg}$	—	—	0.92	—	—
ICFT	—	—	–7	—	kHz
Drift rate	—	—	0.7	—	kHz/50 μs
Drift (DH1)	—	—	6	—	kHz
Drift (DH5)	—	—	6	—	kHz

* There are a total of eight power levels from 0 to 7, and the transmit power ranges from –12 dBm to 9 dBm. When the power level rises by 1, the transmit power increases by 3 dB. Power level 4 is used by default and the corresponding transmit power is 0 dBm.

3.6.3 Receiver – Enhanced Data Rate

Table 17: Receiver Characteristics – Enhanced Data Rate

Parameter	Conditions	Min	Typ	Max	Unit
π/4 DQPSK					
Sensitivity @0.01% BER	—	–90	–89	–88	dBm
Maximum received signal @0.01% BER	—	—	0	—	dBm
Co-channel C/I	—	—	11	—	dB
Adjacent channel selectivity C/I	F = F0 + 1 MHz	—	–7	—	dB
	F = F0 – 1 MHz	—	–7	—	dB
	F = F0 + 2 MHz	—	–25	—	dB
	F = F0 – 2 MHz	—	–35	—	dB
	F = F0 + 3 MHz	—	–25	—	dB
	F = F0 – 3 MHz	—	–45	—	dB
8DPSK					
Sensitivity @0.01% BER	—	–84	–83	–82	dBm
Maximum received signal @0.01% BER	—	—	–5	—	dBm
C/I c-channel	—	—	18	—	dB
Adjacent channel selectivity C/I	F = F0 + 1 MHz	—	2	—	dB
	F = F0 – 1 MHz	—	2	—	dB
	F = F0 + 2 MHz	—	–25	—	dB
	F = F0 – 2 MHz	—	–25	—	dB
	F = F0 + 3 MHz	—	–25	—	dB
	F = F0 – 3 MHz	—	–38	—	dB

3.6.4 Transmitter – Enhanced Data Rate

Table 18: Transmitter Characteristics – Enhanced Data Rate

Parameter	Conditions	Min	Typ	Max	Unit
$\pi/4$ DQPSK max w0	—	—	–0.72	—	kHz
$\pi/4$ DQPSK max wi	—	—	–6	—	kHz
$\pi/4$ DQPSK max |wi + w0|	—	—	–7.42	—	kHz
8DPSK max w0	—	—	0.7	—	kHz
8DPSK max wi	—	—	–9.6	—	kHz
8DPSK max |wi + w0|	—	—	–10	—	kHz
$\pi/4$ DQPSK modulation accuracy	RMS DEVM	—	4.28	—	%
	99% DEVM	—	100	—	%
	Peak DEVM	—	13.3	—	%
8 DPSK modulation accuracy	RMS DEVM	—	5.8	—	%
	99% DEVM	—	100	—	%
	Peak DEVM	—	14	—	%
In-band spurious emissions	F = F0 ± 1 MHz	—	–46	—	dBm
	F = F0 ± 2 MHz	—	–44	—	dBm
	F = F0 ± 3 MHz	—	–49	—	dBm
	F = F0 +/– > 3 MHz	—	—	–53	dBm
EDR differential phase coding	—	—	100	—	%

3.7 Bluetooth LE Radio

3.7.1 Receiver

Table 19: Receiver Characteristics – Bluetooth LE

Parameter	Conditions	Min	Typ	Max	Unit
Sensitivity @30.8% PER	—	–94	–93	–92	dBm
Maximum received signal @30.8% PER	—	0	—	—	dBm
Co-channel C/I	—	—	+10	—	dB
Adjacent channel selectivity C/I	F = F0 + 1 MHz	—	–5	—	dB
	F = F0 – 1 MHz	—	–5	—	dB
	F = F0 + 2 MHz	—	–25	—	dB
	F = F0 – 2 MHz	—	–35	—	dB
	F = F0 + 3 MHz	—	–25	—	dB
	F = F0 – 3 MHz	—	–45	—	dB
Out-of-band blocking performance	30 MHz ~ 2000 MHz	–10	—	—	dBm
	2000 MHz ~ 2400 MHz	–27	—	—	dBm
	2500 MHz ~ 3000 MHz	–27	—	—	dBm
	3000 MHz ~ 12.5 GHz	–10	—	—	dBm
Intermodulation	—	–36	—	—	dBm

3.7.2 Transmitter

Table 20: Transmitter Characteristics – Bluetooth LE

Parameter	Conditions	Min	Typ	Max	Unit
Adjacent channel transmit power	F = F0 ± 2 MHz	—	–55	—	dBm
	F = F0 ± 3 MHz	—	–57	—	dBm
	F = F0 ± > 3 MHz	—	–59	—	dBm
$\Delta f1_{avg}$	—	—	—	265	kHz
$\Delta f2_{max}$	—	210	—	—	kHz
$\Delta f2_{avg}/\Delta f1_{avg}$	—	—	+0.92	—	—
ICFT	—	—	–10	—	kHz
Drift rate	—	—	0.7	—	kHz/50 μs
Drift	—	—	2	—	kHz

4 Physical Dimensions and PCB Land Pattern

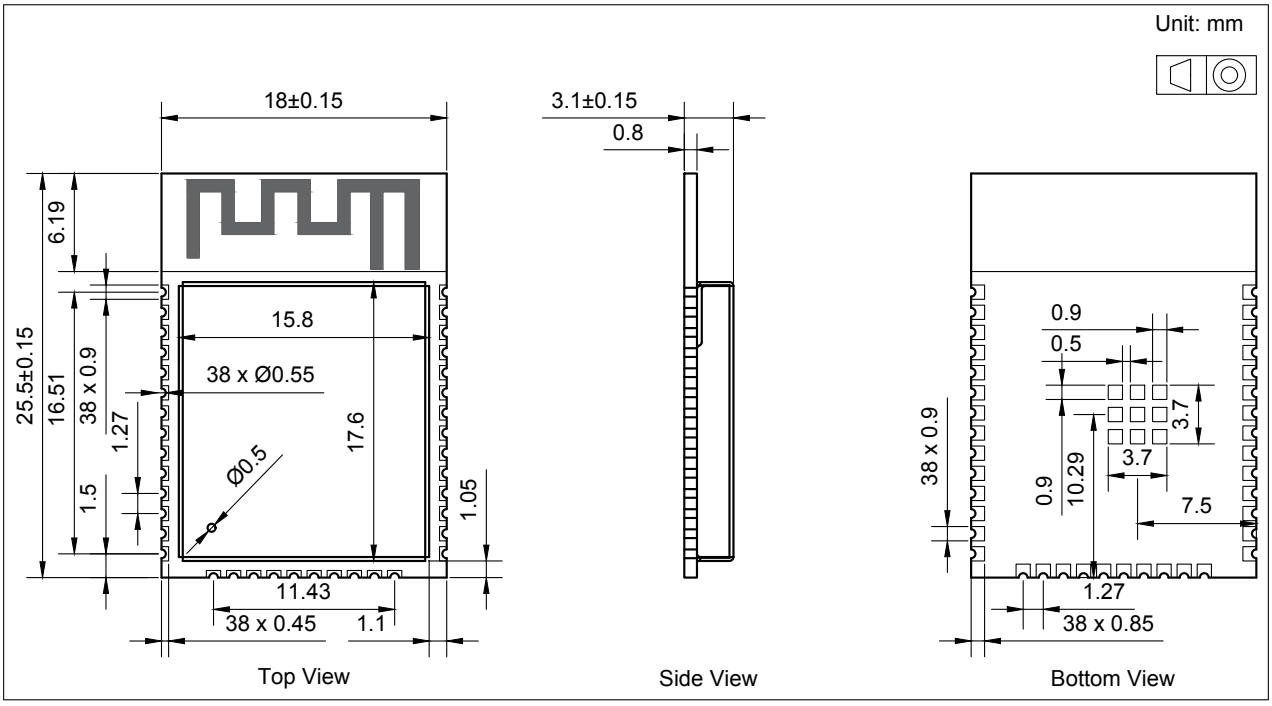

Figure 8: ESP32-WROOM-32E Physical Dimensions

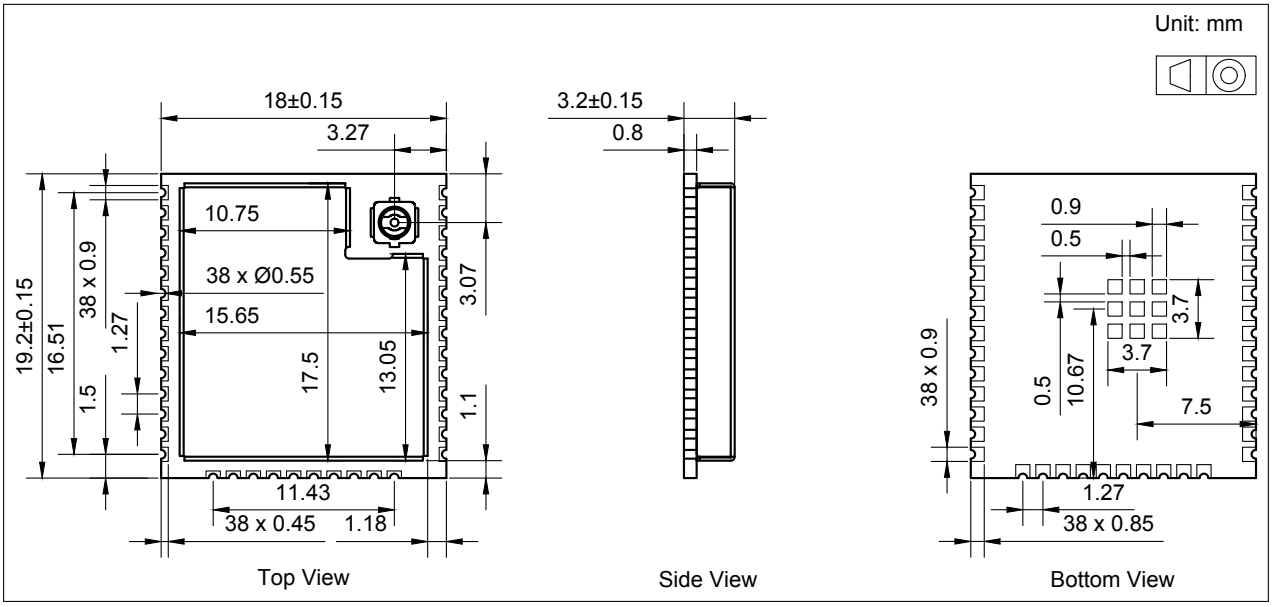

Figure 9: ESP32-WROOM-32UE Physical Dimensions

Recommended PCB Land Pattern

This section provides the following resources for your reference:

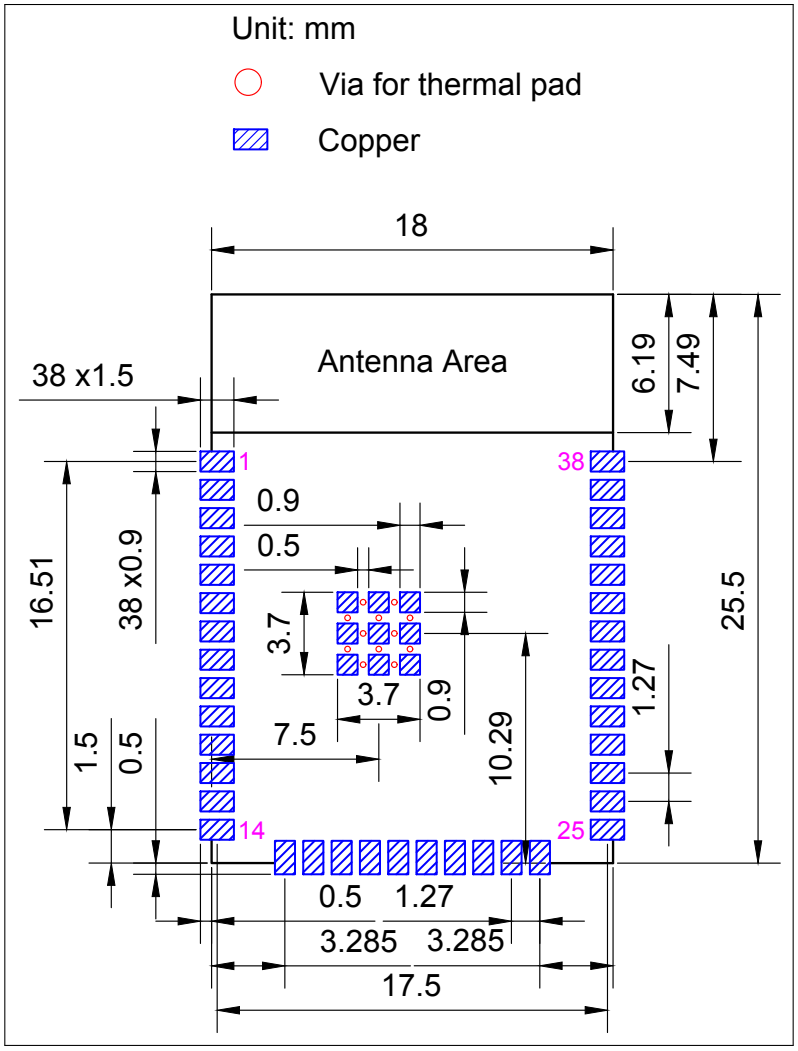

Figure 10: ESP32-WROOM-32E Recommended PCB Land Pattern

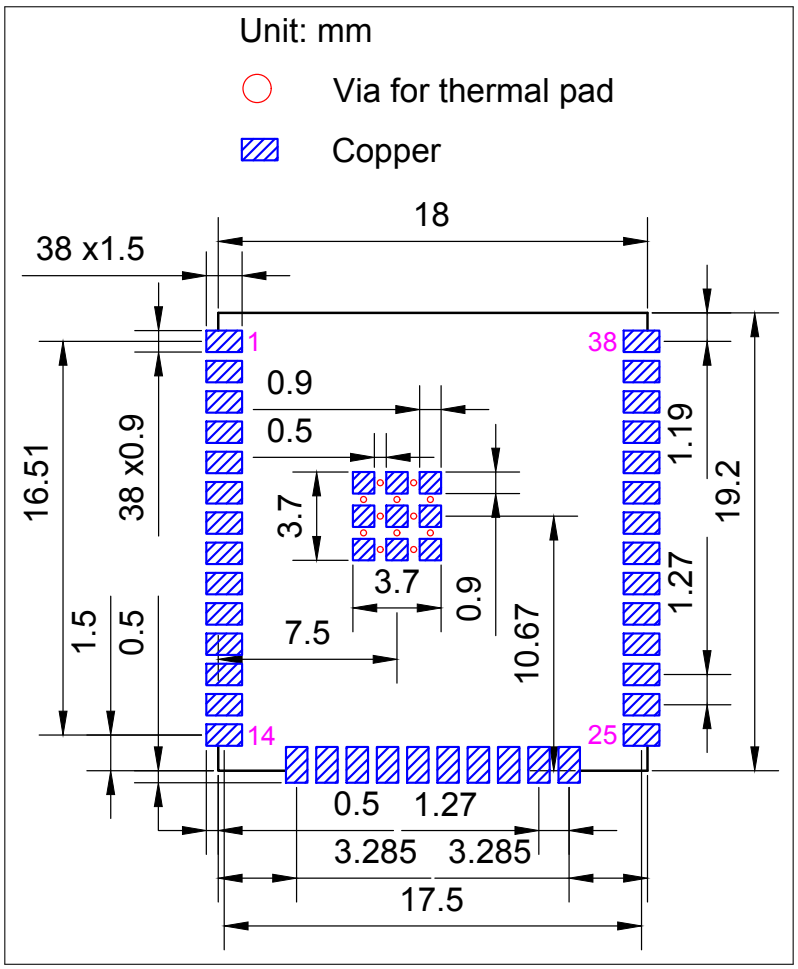

Figure 11: ESP32-WROOM-32UE Recommended PCB Land Pattern

Dimensions of External Antenna Connector

ESP32-WROOM-32UE uses the first generation external antenna connector as shown in Figure 12. This connector is compatible with the following connectors:

- U.FL Series connector from Hirose
- MHF I connector from I-PEX
- AMC connector from Amphenol

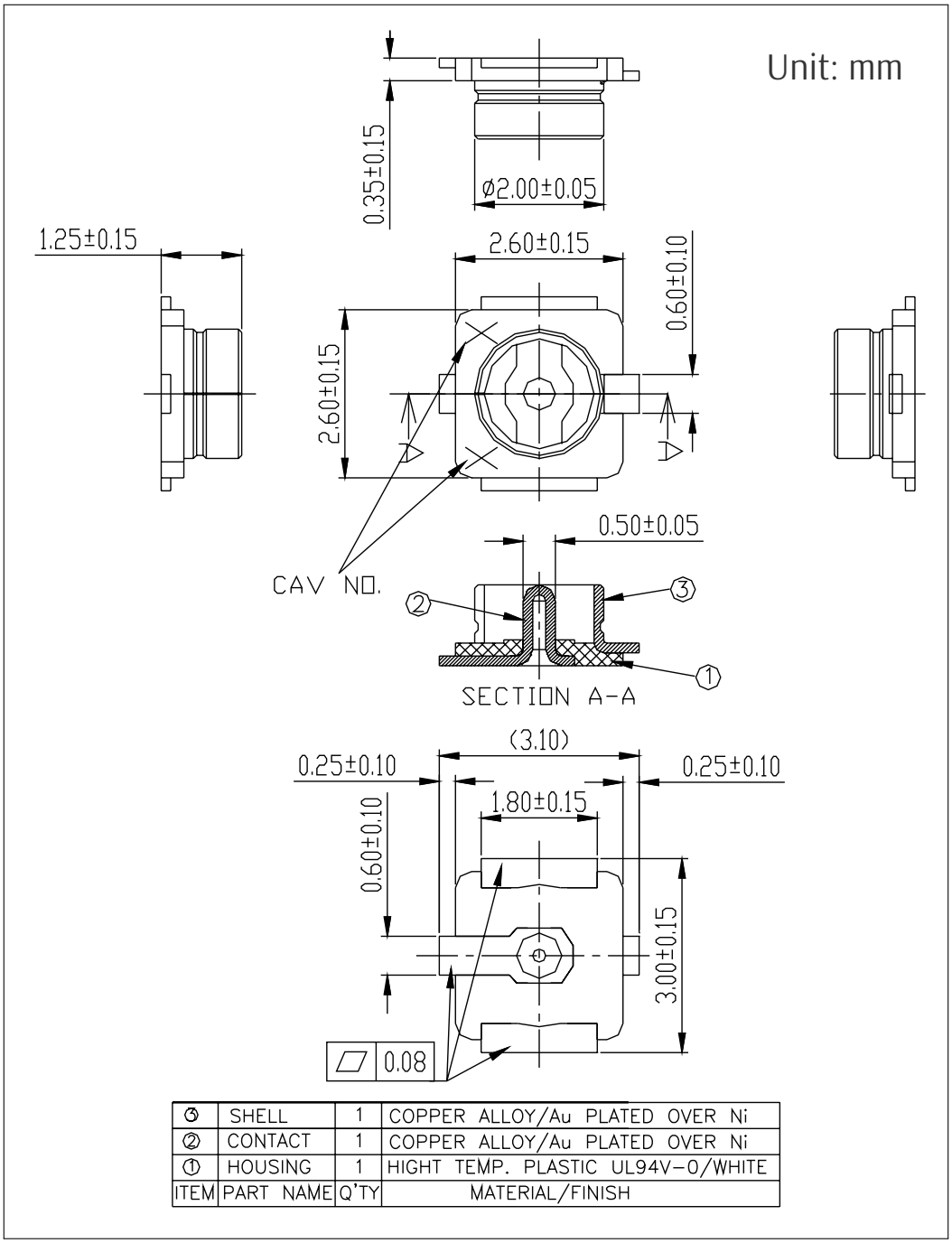

Figure 12: Dimensions of External Antenna Connector

5 Product Handling

Storage Conditions

The products sealed in moisture barrier bags (MBB) should be stored in a non-condensing atmospheric environment of < 40 °C and 90%RH. The module is rated at the moisture sensitivity level (MSL) of 3.

After unpacking, the module must be soldered within 168 hours with the factory conditions 25 ± 5 °C and 60 %RH. If the above conditions are not met, the module needs to be baked.

Electrostatic Discharge (ESD)

- Human body model (HBM): ±2000 V
- Charged-device model (CDM): ±500 V

Reflow Profile

Solder the module in a single reflow.

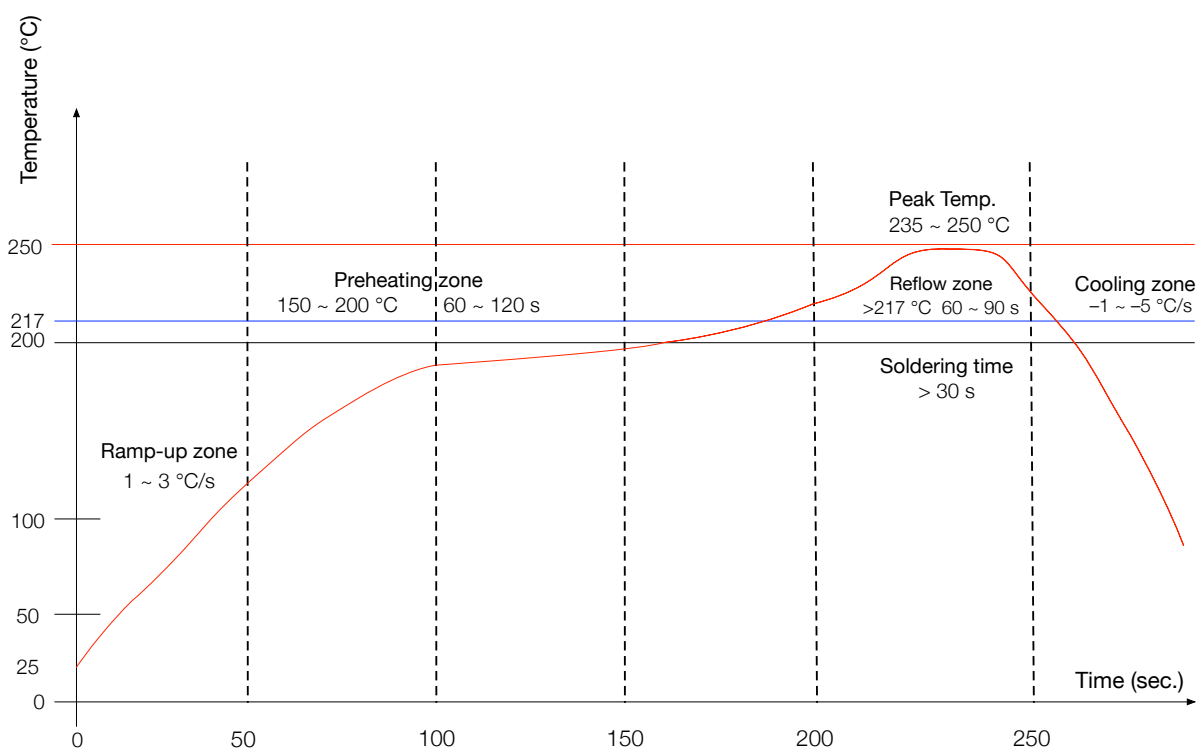

Ramp-up zone — Temp.: 25 ~ 150 °C Time: 60 ~ 90 s Ramp-up rate: 1 ~ 3 °C/s
Preheating zone — Temp.: 150 ~ 200 °C Time: 60 ~ 120 s
Reflow zone — Temp.: >217 °C Time: 60 ~ 90 s; Peak Temp.: 235 ~ 250 °C Time: 30 ~ 70 s
Cooling zone — Peak Temp. ~ 180 °C Ramp-down rate: –1 ~ –5 °C/s
Solder — Sn-Ag-Cu (SAC305) lead-free solder alloy

Figure 13: Reflow Profile

Ultrasonic Vibration

Avoid exposing Espressif modules to vibration from ultrasonic equipment, such as ultrasonic welders or ultrasonic cleaners. This vibration may induce resonance in the in-module crystal and lead to its malfunction or even failure. As a consequence, **the module may stop working or its performance may deteriorate**.

FCC Statement

Any Changes or modifications not expressly approved by the party responsible for compliance could void the user's authority to operate the equipment.

This device complies with part 15 of the FCC Rules. Operation is subject to the following two conditions:

(1)This device may not cause harmful interference, and

(2)This device must accept any interference received, including interference that may cause undesired operation.

Note : This equipment has been tested and found to comply with the limits for a Class B digital device, pursuant to part 15 of the FCC Rules. These limits are designed to provide reasonable protection against harmful interference in a residential installation. This equipment generates,uses and can radiate radio frequency energy and, if not installed and used in accordance with the instructions, may cause harmful interference to radio communications. However, there is no guarantee that interference will not occur in a particular installation. If this equipment does cause harmful interference to radio or television reception, which can be determined by turning the equipment off and on, the user is encouraged to try to correct the interference by one or more of the following measures:

—Reorient or relocate the receiving antenna.

—Increase the separation between the equipment and receiver.

—Connect the equipment into an outlet on a circuit different from that to which the receiver is connected.

—Consult the dealer or an experienced radio/TV technician for help.

FCC Radiation Exposure Statement:

This equipment complies with FCC radiation exposure limits set forth for an uncontrolled environment .This equipment should be installed and operated with minimum distance 20cm between the radiator& your body.

ISED RSS Warning/ISED RF Exposure Statement

This device contains licence-exempt transmitter(s)/receiver(s) that comply with Innovation, Science and Economic Development Canada's licence-exempt RSS(s). Operation is subject to the following two conditions:

1. This device may not cause interference.
2. This device must accept any interference, including interference that may cause undesired operation of the device.

L'émetteur/récepteur exempt de licence contenu dans le présent appareil est conforme aux CNR d'Innovation, Sciences et Développement économique Canada applicables aux appareils radio exempts de licence. L'exploitation est autorisée aux deux conditions suivantes :

1. L'appareil ne doit pas produire de brouillage;
2. L'appareil doit accepter tout brouillage radioélectrique subi, même si le brouillage est susceptible d'en compromettre le fonctionnement.

This equipment complies with ISED RF radiation exposure limits set forth for an uncontrolled environment. This transmitter must not be co-located or operating in conjunction with any other antenna or transmitter.This equipment should be installed and operated with a minimum distance of 20cm between the radiator &your body.

Conforme aux limitesd'exposition de rayonnement RF ISED établiespour un environnement non contrôlé. Cetémetteur ne doit pas être co-implanté oufonctionner en onjunction avec toute autreantenne ou transmetteur. Cet équipement doit être installé et utiliséavec une distance minimale de 20cm entre leradiateur&votre corps.

The final end product must be labeled in a visible area with the following: Contains IC: 32866-ESPWROOMUE

Le produit final doit ê treé tiquetdansunendroitvisible avec l'inscription suivante: Contient des IC: 32866-ESPWROOMUE

This radio transmitter [IC: 32866-ESPWROOMUE]has been approved by Innovation, Scienceand Economic Development Canada to operate with the antenna types listed below, with the maximum permissible gain indicated. Antenna types not included in this list that have a gain greater than the maximum gain indicated for any type listed are strictly prohibited for use with this device.

Antenna type: Dipole Antenna, Peak antenna gain 2.37 dBi ; Monopole Antenna, Peak antenna gain: 3.95dBi

Cet émetteur radio [IC : 32866-ESPWROOMUE] a été approuvé par Innovation, Sciences et Développement économique Canada pour fonctionner avec les types d'antennes répertoriés ci-dessous, avec le gain maximum autorisé indiqué. Types d'antennes non inclus dans cette liste qui ont un gain supérieur à. le gain maximum indiqué pour tout type répertorié est strictement interdit pour une utilisation avec cet appareil.

Type d'antenne : Antenne dipôle, gain d'antenne maximal : 2.37 dBi ; Antenne monopôle, gain d'antenne maximal : 3.95 dBi

OEM instructions

1. Applicable FCC rules
   This device complies with part 15.247 of the FCC Rules.
   a. The specific operational use conditions
      This module can be used in IoT devices. The input voltage to the module is nominally 3.0 ~ 3.6 V_{DC}. The operational ambient temperature of the module is

      –40 ~ 85 °C
2. Limited module procedures
   N/A
3. Trace antenna design
   N/A
4. RF exposure considerations
   The equipment complies with FCC radiation exposure limits set forth for an uncontrolled environment. This equipment should be installed and operated with minimum distance 20cm between the radiator and your body.
5. Antenna
   Antenna type: Dipole Antenna, Peak antenna gain 2.37 dBi ;Monopole Antenna, Peak antenna gain: 3.95dBi
6. Label and compliance information
   An exterior label on OEM's end product can use wording such as the following:
   "Contains FCC ID: 2BFD7-ESPWROOM32UE "
7. Information on test modes and additional testing requirements

1) The modular transmitter has been fully tested by the module grantee on the required number of channels, modulation types, and modes, it should not be necessary for the host installer to re-test all the available transmitter modes or settings. It is recommended that the host product manufacturer, installing the modular transmitter, perform some investigative measurements to confirm that the resulting composite system does not exceed the spurious emissions limits or band edge limits (e.g., where a different antenna may be causing additional emissions).
2) The testing should check for emissions that may occur due to the intermixing of emissions with the other transmitters, digital circuitry, or due to physical properties of the host product (enclosure). This investigation is especially important when integrating multiple modular transmitters where the certification is based on testing each of them in a stand-alone configuration. It is important to note that host product manufacturers should not assume that because the modular transmitter is certified that they do not have any responsibility for final product compliance.
3) If the investigation indicates a compliance concern the host product manufacturer is obligated to mitigate the issue. Host products using a modular transmitter are subject to all the applicable individual technical rules as well as to the general conditions of operation in Sections 15.5, 15.15, and 15.29 to not cause interference. The operator of the host product will be obligated to stop operating the device until the interference have been corrected .
4) Additional testing, Part 15 Sub part B disclaimer:
   The device is only FCC authorized for the specific rule parts (i.e., FCC transmitter rules) listed on the grant, and that the host product manufacturer is responsible for compliance to any other FCC rules that apply to the host not covered by the modular transmitter grant of certification. The final host / module combination need to be evaluated against the FCC Part 15B criteria for unintentional radiators in order to be properly authorized for operation as a Part 15 digital device. The host integrator installing this module into their product must ensure that the final composite product complies with the FCC requirements by a technical assessment or evaluation to the FCC rules, including the transmitter operation and should refer to guidance in KDB 996369. For host products with certified modular transmitter, the frequency range of investigation of the composite system is specified by rule in Sections 15.33(a)(1) through (a)(3), or the range applicable to the digital device, as shown in Section 15.33(b)(1), whichever is the higher frequency range of investigation When testing the host product, all the transmitters must be operating.

The transmitters can be enabled by using publicly-available drivers and turned on, so the transmitters are active. When testing for emissions from the unintentional radiator, the transmitter shall be placed in the receive mode or idle mode, if possible. If receive mode only is not possible then, the radio shall be passive (preferred) and/or active scanning. In these cases, this would need to enable activity on the communication BUS (i.e., PCIe, SDIO, USB) to ensure the unintentional radiator circuitry is enabled. Testing laboratories may need to add attenuation or filters depending on the signal strength of any active beacons (if applicable) from the enabled radio(s). See ANSI C63.4, ANSI C63.10 for further general testing details. The product under test is set into a link/ association with a partnering device, as per the normal intended use of the product. To ease testing, the product under test is set to transmit at a high duty cycle, such as by sending a file or streaming some media content.

Disclaimer and Copyright Notice

Information in this document, including URL references, is subject to change without notice.

ALL THIRD PARTY'S INFORMATION IN THIS DOCUMENT IS PROVIDED AS IS WITH NO WARRANTIES TO ITS AUTHENTICITY AND ACCURACY.

NO WARRANTY IS PROVIDED TO THIS DOCUMENT FOR ITS MERCHANTABILITY, NON-INFRINGEMENT, FITNESS FOR ANY PARTICULAR PURPOSE, NOR DOES ANY WARRANTY OTHERWISE ARISING OUT OF ANY PROPOSAL, SPECIFICATION OR SAMPLE.

All liability, including liability for infringement of any proprietary rights, relating to use of information in this document is disclaimed. No licenses express or implied, by estoppel or otherwise, to any intellectual property rights are granted herein.

The Wi-Fi Alliance Member logo is a trademark of the Wi-Fi Alliance. The Bluetooth logo is a registered trademark of Bluetooth SIG.

All trade names, trademarks and registered trademarks mentioned in this document are property of their respective owners, and are hereby acknowledged.