BAREBONES

Block TOWER

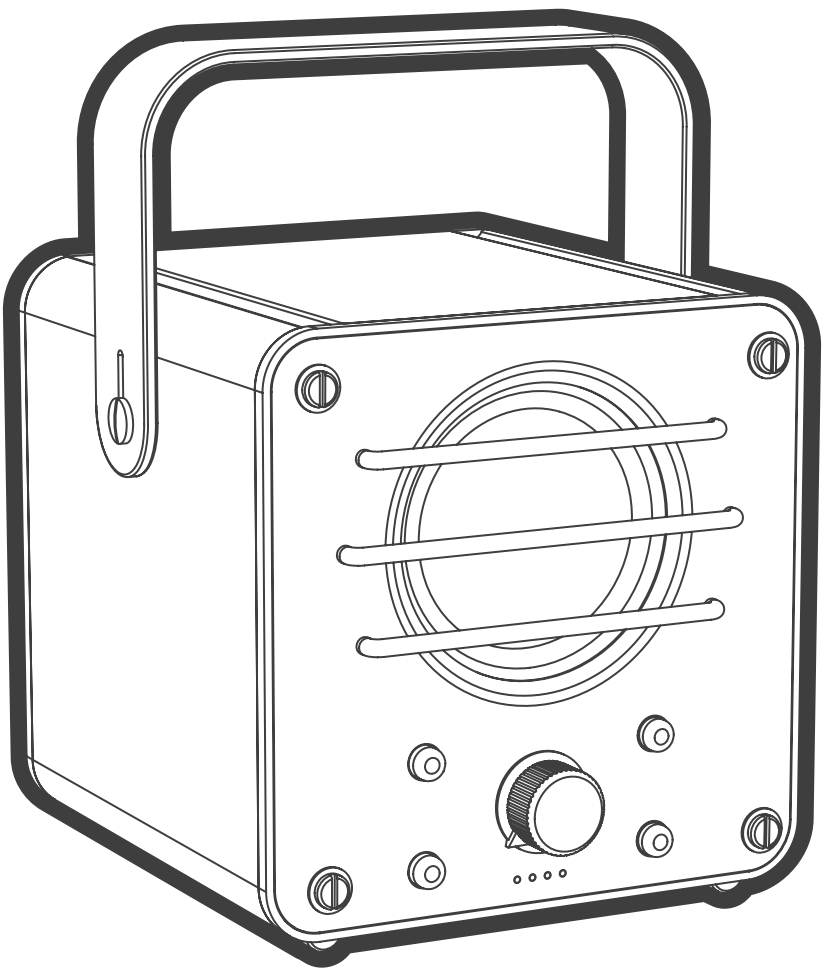

BLOCK TOWER SPEAKER

Quick Start Guide

WHAT'S IN THE BOX?

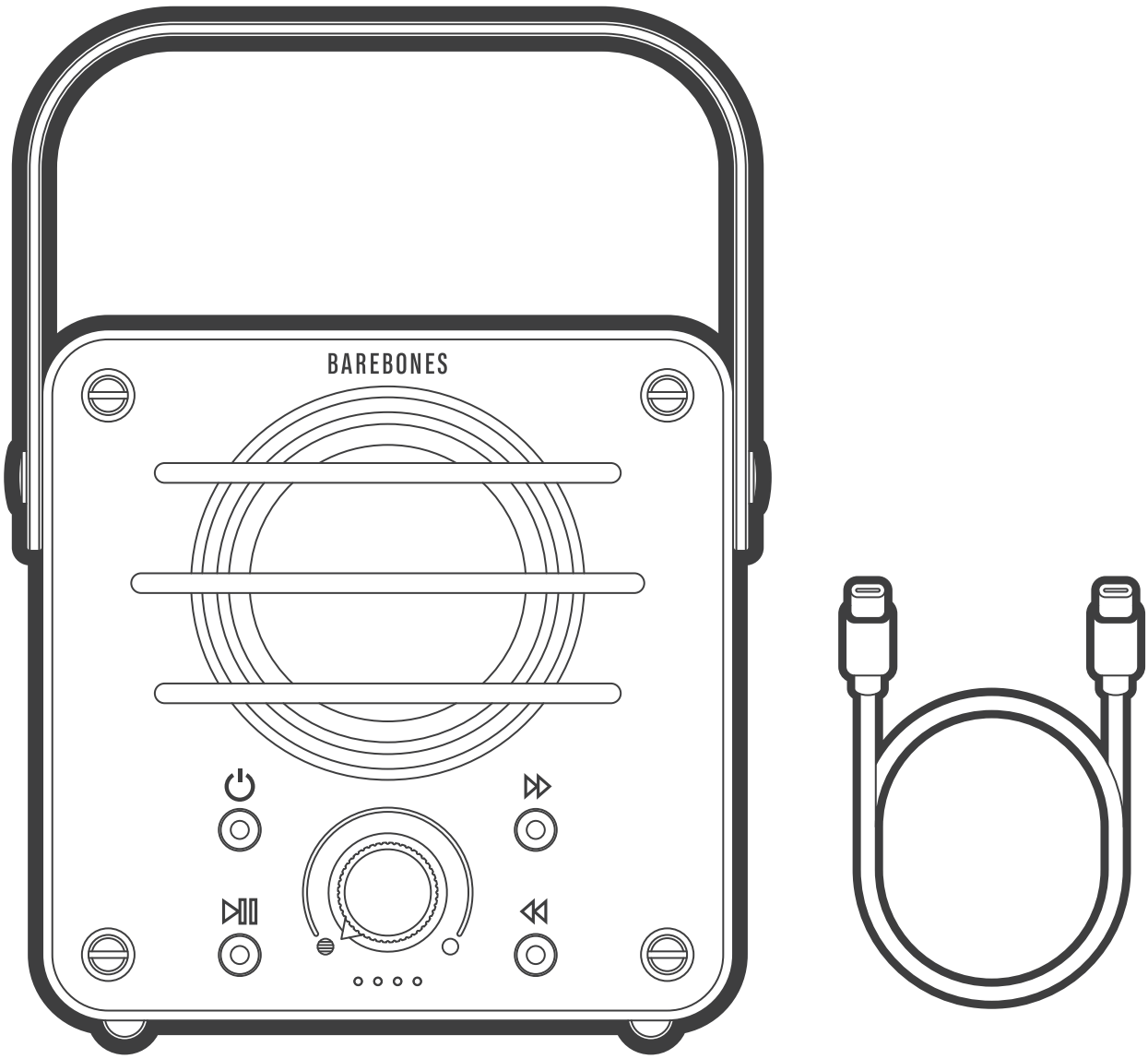

For optimal battery lifespan and performance, fully charge before first use and at least once every 3 months.

WIRELESS PAIRING

1. POWER ON

The Power button will flash blue to indicate the speaker is in pairing mode.

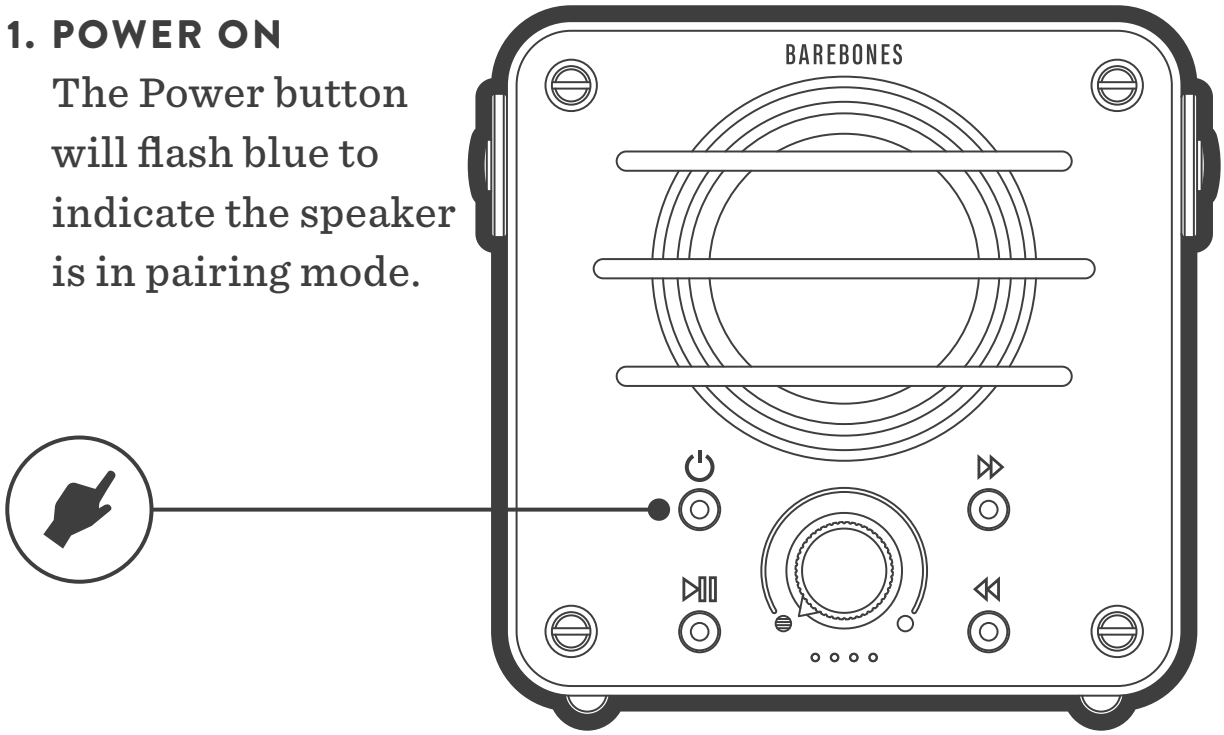

2. OPEN WIRELESS SETTINGS ON YOUR DEVICE

Find and choose "BAREBONES Speaker" from the device list.

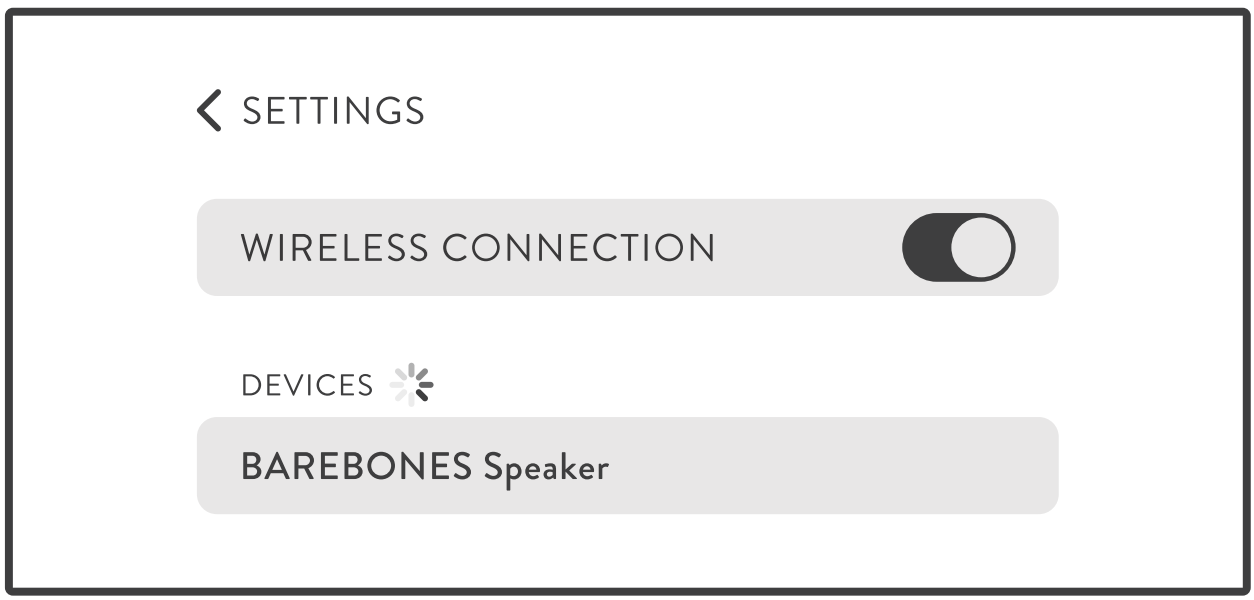

CONTROLS

POWER ON: Press once.
POWER OFF: Press and hold for 3 seconds.

PLAY/PAUSE: Starts playback and pauses the track.

TRACK SKIP: Press once.

RESTART TRACK: Press once.
PREVIOUS TRACK: Press twice with 1 second between.

VOLUME CONTROL

Adjust the volume on both your device and the speaker to achieve your preferred volume level.

BAREBONES RADIO

Barebones Radio is an internally-stored playlist of 150+ songs that inspired the speaker's design.

Press

ENTER BAREBONES RADIO

Press

RETURN TO WIRELESS AUDIO

POWER LEVEL

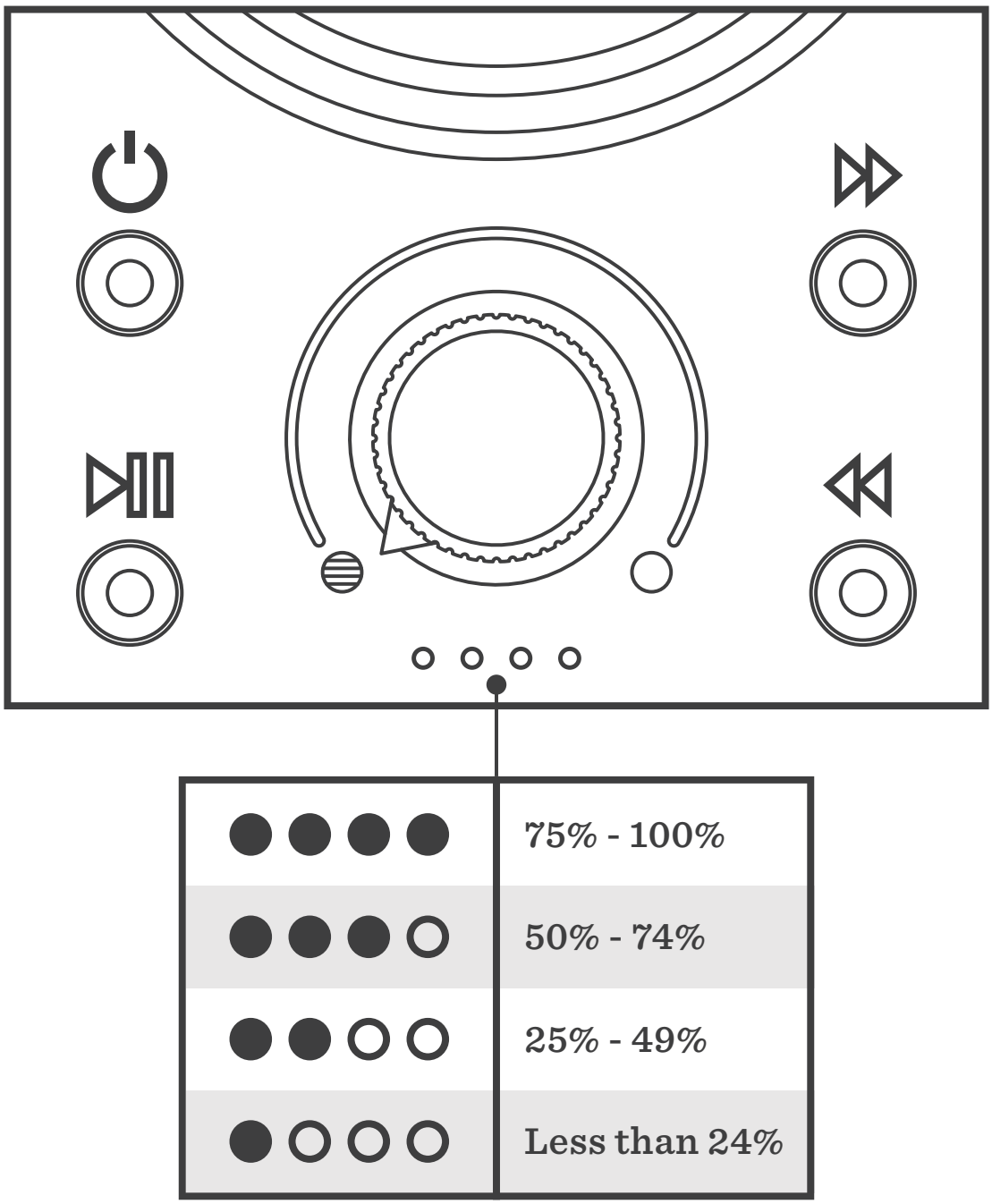

WIRELESS CHARGING OPTIONS

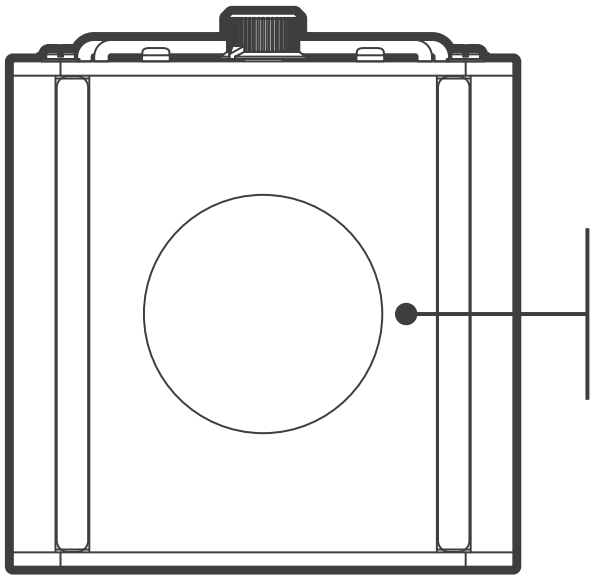

The speaker is capable of charging wirelessly via the disc located on its base.

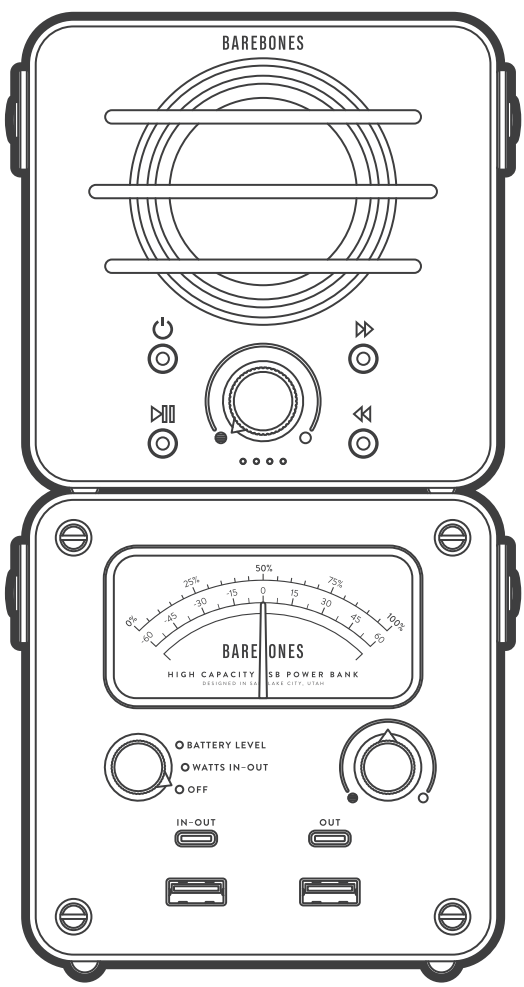

Option 1

BLOCK TOWER POWER STATION

The speaker stacks perfectly on top of the Block Tower Power Station to charge wirelessly.

WIRELESS CHARGING OPTIONS

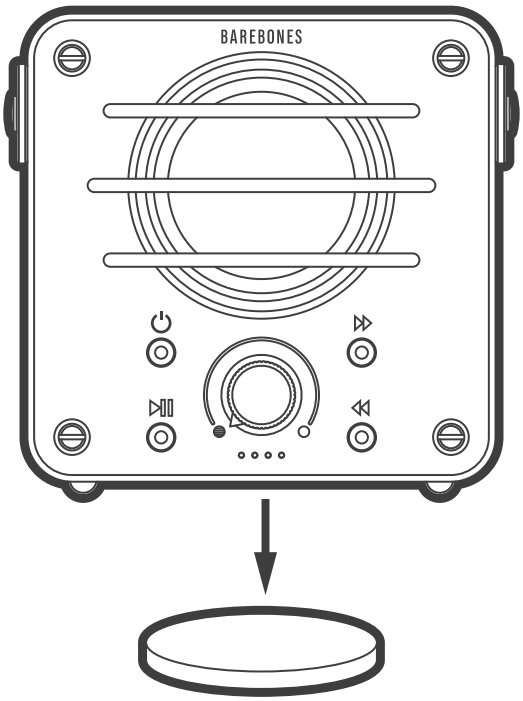

Option 2

WIRELESS CHARGING PAD

Place the speaker base on the center of the wireless charger. When the speaker is aligned properly with the charger, the amber LED lights will begin to blink indicating the battery level.

WIRED CHARGING

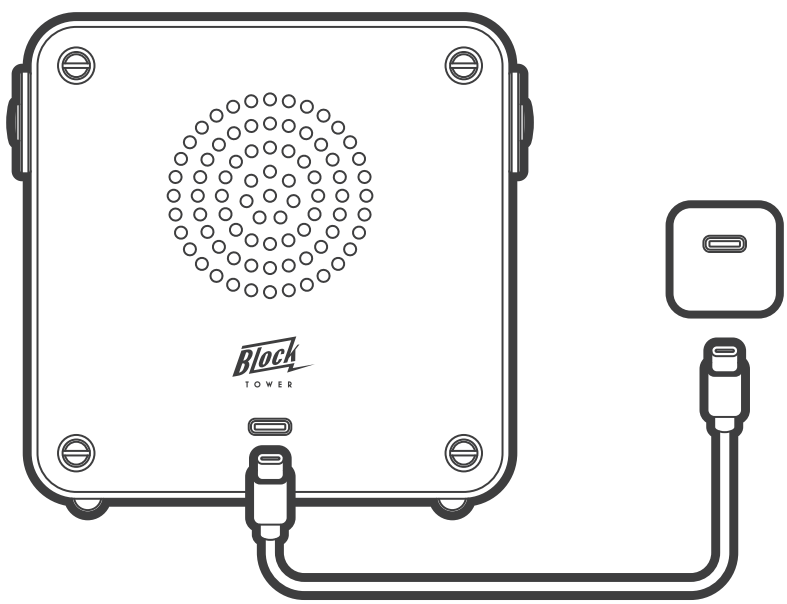

WARNINGS & SAFETY

- Do not attempt to disassemble the speaker.
- Keep away from extreme heat, direct sunlight, or fire.
- Avoid exposure to rain, moisture, or extreme weather conditions.
- Handle with care to prevent scratches, dents, or damage to the brass faceplate and housing.
- Do not use abrasive cleaners or solvents that may harm the surface.
- Prolonged exposure to high-volume levels may cause hearing damage.
- Avoid placing the speaker on uneven surfaces or near edges where it may fall.
- Keep away from children to prevent choking hazards.
- Regularly inspect the speaker for any signs of wear, damage, or unusual behavior. In case of any malfunction or if the speaker becomes unusually hot, power it off immediately and contact customer support for assistance.

Follow these guidelines to ensure the safe and proper use of your speaker. Failure to adhere to these warnings may result in damage to the device, injury, or other safety hazards.

FCC WARNING

This device complies with part 15 of the FCC Rules. Operation is subject to the following two conditions: (1) This device may not cause harmful interference, and (2) this device must accept any interference received, including interference that may cause undesired operation.

Any changes or modifications not expressly approved by the party responsible for compliance could void the user's authority to operate the equipment.

Note: This equipment has been tested and found to comply with the limits for a Class B digital device, pursuant to part 15 of the FCC Rules. These limits are designed to provide reasonable protection against harmful interference in a residential installation. This equipment generates uses and can radiate radio frequency energy and, if not installed and used in accordance with the instructions, may cause harmful interference to radio communications. However, there is no guarantee that interference will not occur in a particular installation. If this equipment does cause harmful interference to radio or television reception, which can be determined by turning the equipment off and on, the user is encouraged to try to correct the interference by one or more of the following measures:

- Reorient or relocate the receiving antenna.
- Increase the separation between the equipment and receiver.
- Connect the equipment into an outlet on a circuit different from that to which the receiver is connected.
- Consult the dealer or an experienced radio/TV technician for help.

This equipment complies with FCC radiation exposure limits set forth for an uncontrolled environment.

SPECIFICATIONS

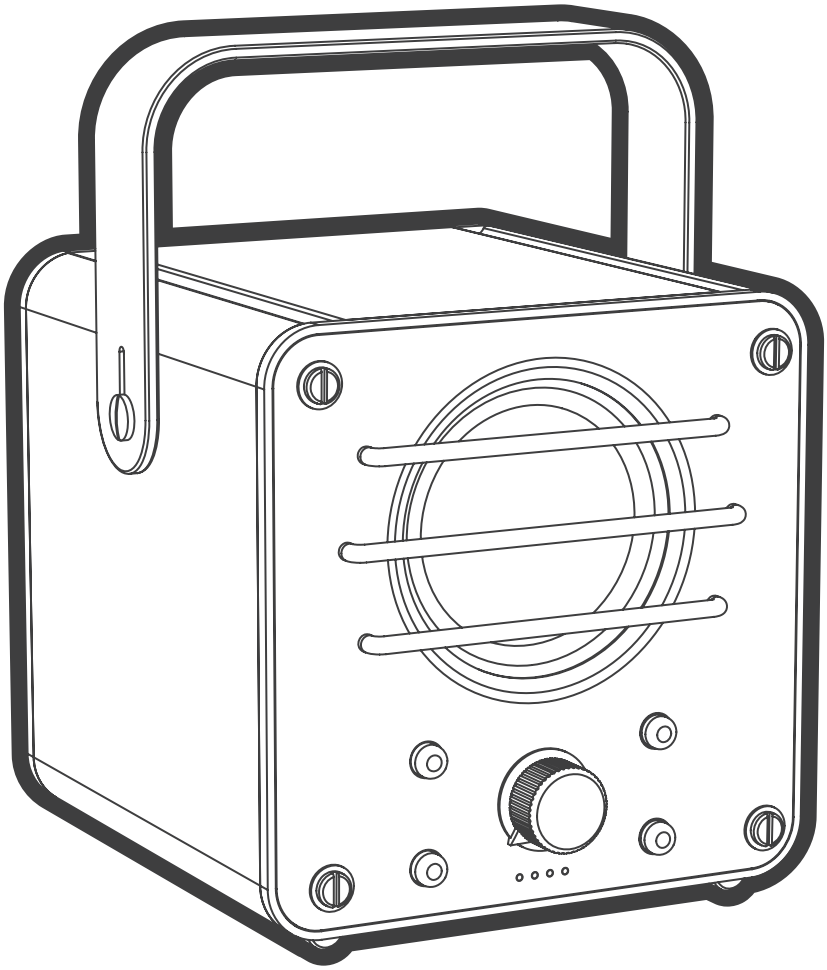

RUN TIME	20+ HOURS
USB-C CHARGING	6 HOURS | 5W MAX *(Input Only)*
WIRELESS CHARGING	6 HOURS | 5W MAX
SPEAKER DRIVER	57 mm, 15W
BATTERY	3.7V, 5200mAh, 19.24Wh
DIMENSIONS	4.5" x 4.5" x 4.25" | 2 lbs

FC CE CEC RoHS

Build Your Tower

LANTERN

SPEAKER

POWER STATION

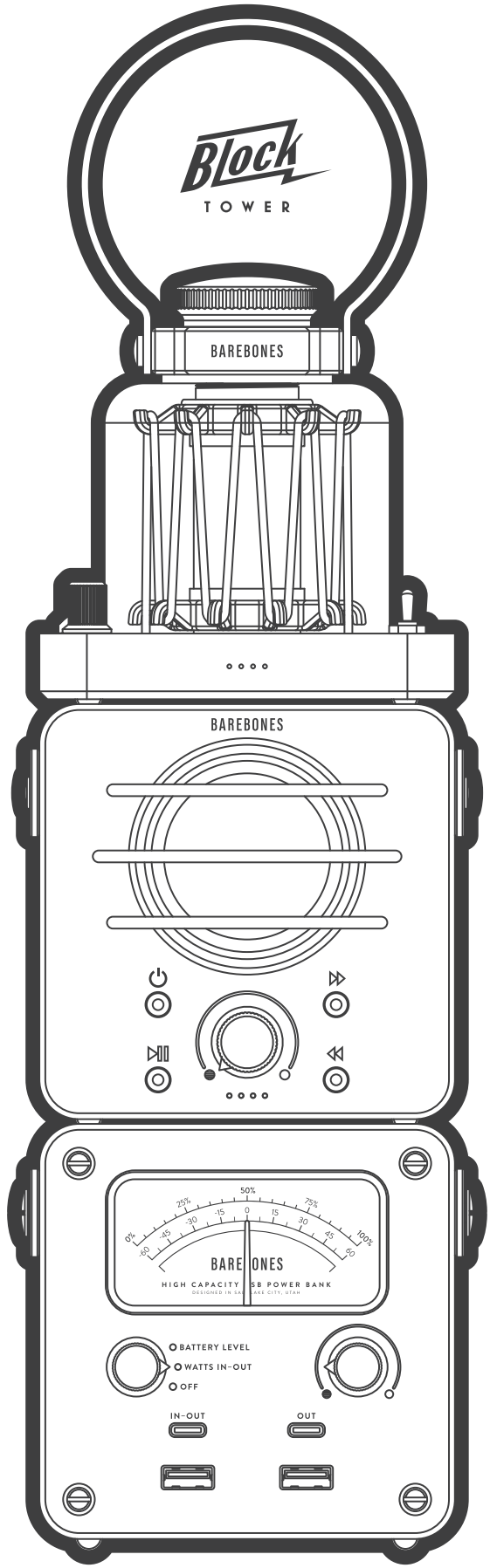

BAREBONES

Block TOWER

SCAN FOR THE FULL GUIDE

Includes:

- Pairing Multiple Speakers
- Battery Replacement
- Specifications
- Care

BAREBONESLIVING.COM

DESIGNED IN UTAH | MADE IN CHINA

Certified B Corporation

LIMITED 2 YEAR WARRANTY