AT3216 Series

Multilayer Chip Antenna

Features

- ❖ Monolithic SMD with small, low-profile and light-weight type.
- ❖ Wide bandwidth
- ❖ RoHS compliant

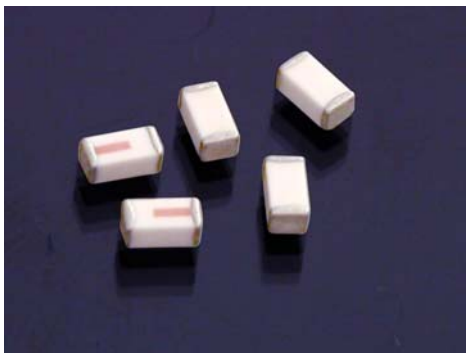

Applications

- ❖Bluetooth/Wireless LAN/Home RF
- ❖ISM band 2.4GHz applications

Specifications

Part Number	Operating Frequency (MHz)	Peak Gain (XZ-V)	Average Gain (XZ-V)	VSWR	Impedance
AT3216 -A2R7TM31_	2400 ~ 2500	0.4 dBi typ.	-0.6 dBi typ.	2 max.	50

Q'ty/Reel (pcs) : 3,000pcs
Operating Temperature Range : -40 ~ +85 °C
Storage Temperature Range : -40 ~ +85 °C
Storage Period : 12 months max.
Power Capacity : 3W max.

Part Number

AT	3216	-	A	2R7	TM31	◻	◻
①	②		③	④	⑤	⑥	⑦

① Type	AT : Antenna	② Dimensions (L × W)	3.2× 1.6 mm
③ Material Code	A	④ Initial center frequency	2R7=2700MHz
⑤ Specification Code	TM31	⑥ Packaging	T: Tape & Reel B: Bulk
⑦ Soldering	/LF=lead-free		

Terminal Configuration

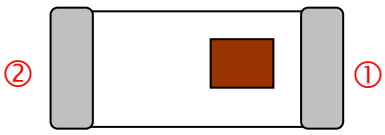

No.	Terminal Name	No.	Terminal Name
①	Feeding Point	②	NC

Dimensions and Recommended PC Board Pattern

Unit : mm

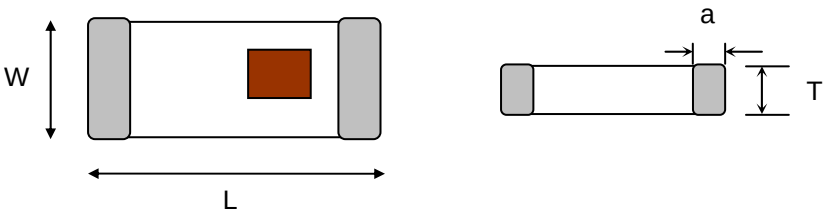

Mark	L	W	T	a
Dimensions	3.2±0.2	1.6±0.2	1.3+ 0.1/-0.2	0.5±0.3

(a) Without Matching Circuits

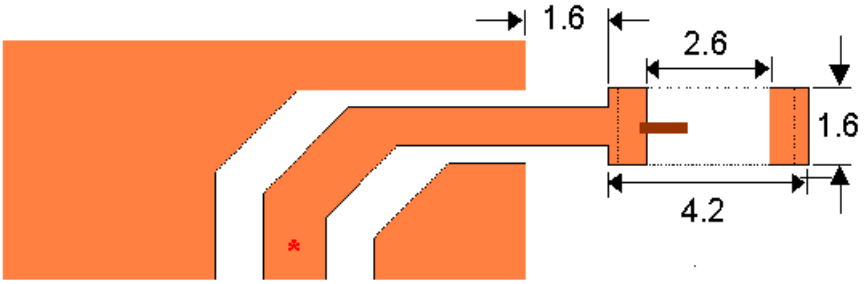

(b) With Matching Circuits

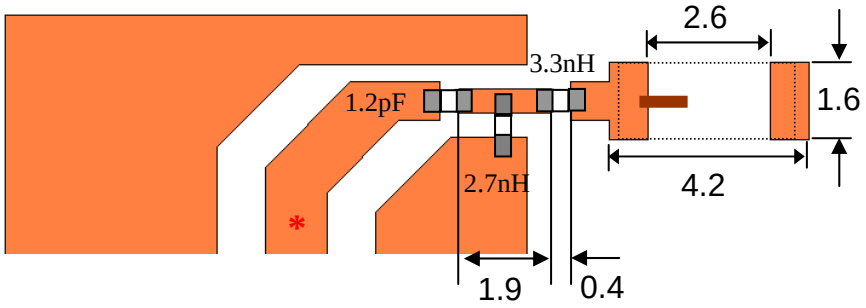

*Line width should be designed to match 50Ω characteristic impedance, depending on PCB material and thickness.

Typical Electrical Characteristics (T=25°C)

❖Test Board

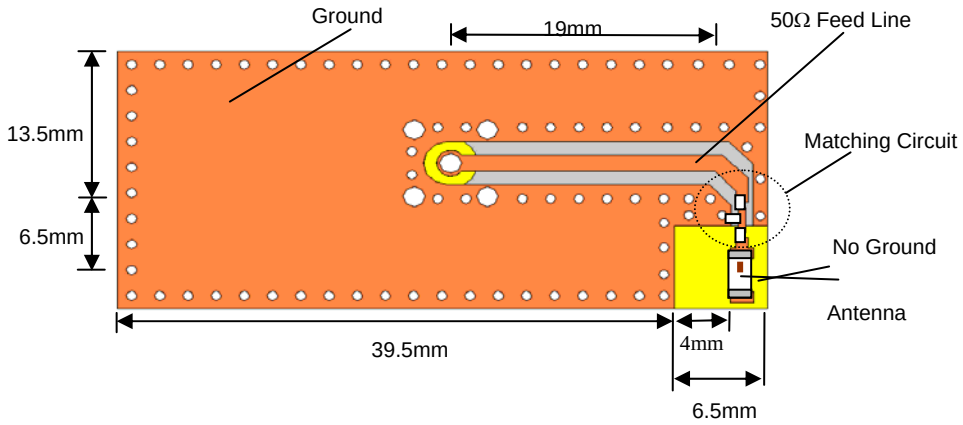

❖Return Loss

(a) Without Matching Circuits

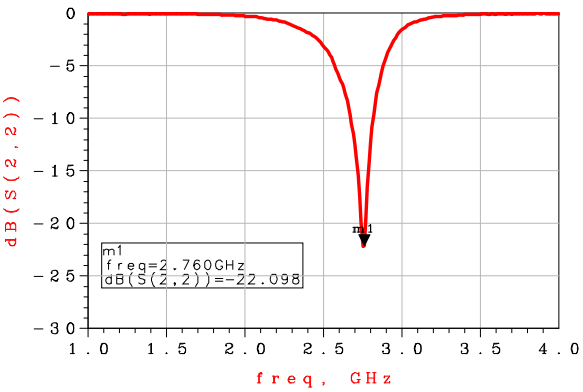

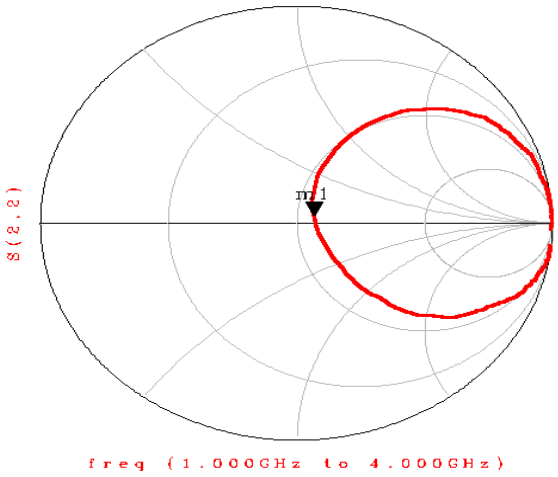

(b) With Matching Circuits

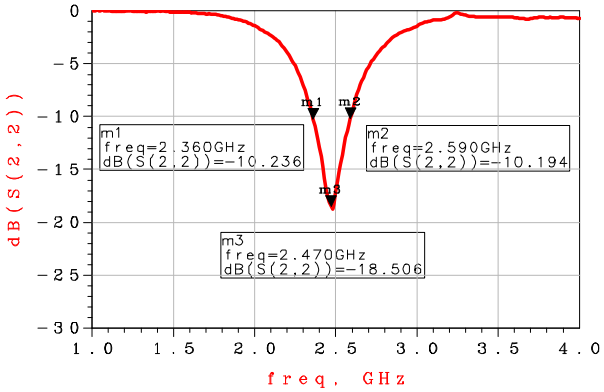

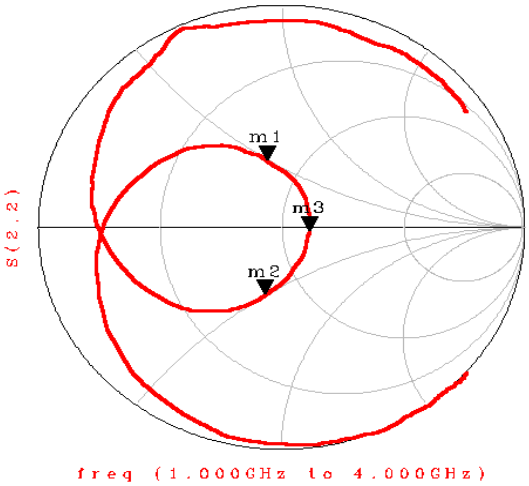

Radiation Patterns

XY-V/XY-H

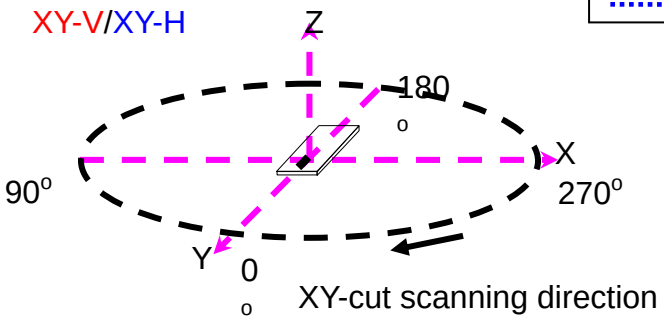

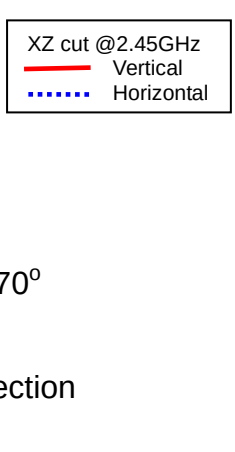

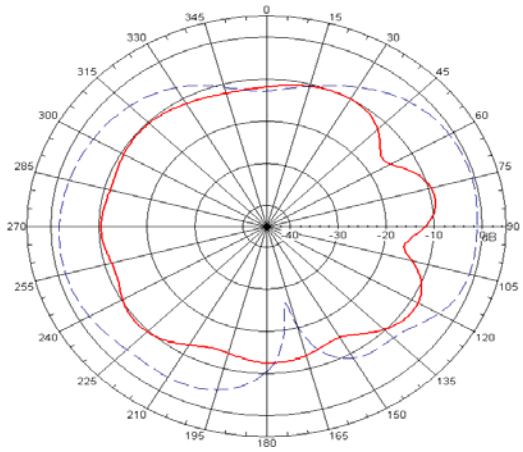

XZ-V/XZ-H

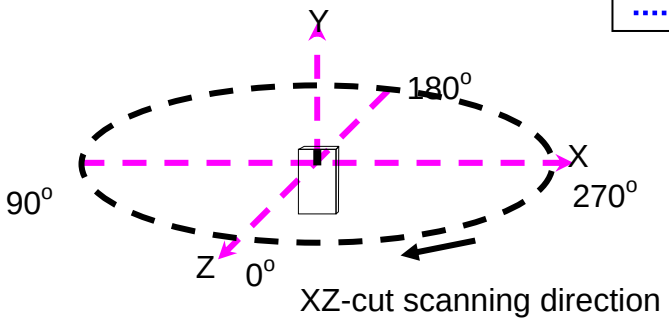

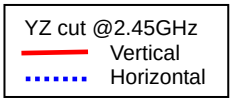

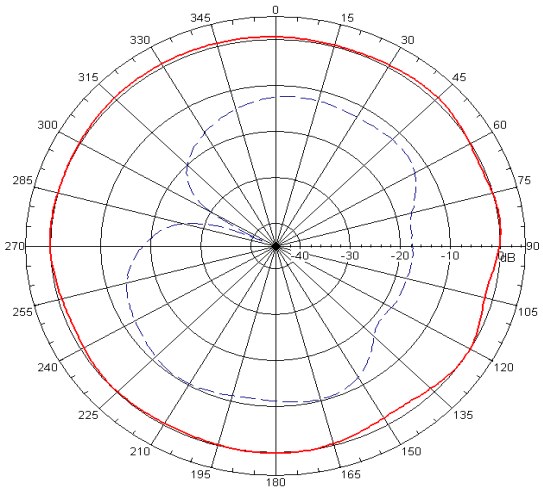

YZ-V/YZ-H

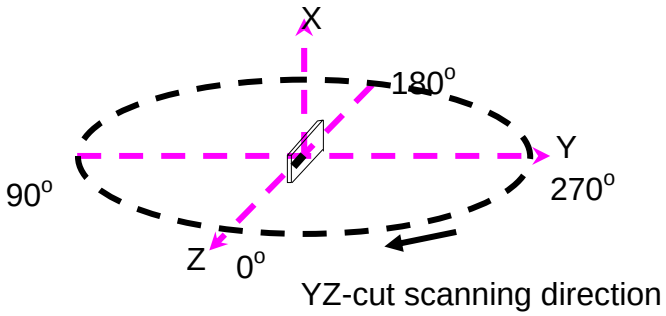

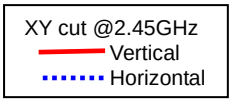

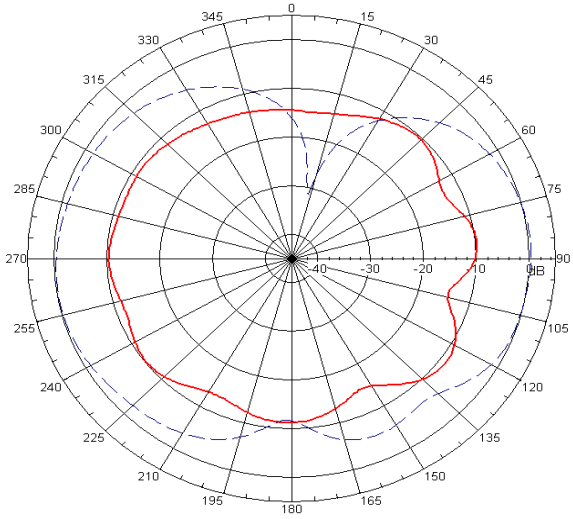

Taping Specifications

❖Tape Dimensions (Unit: mm) & Quantity

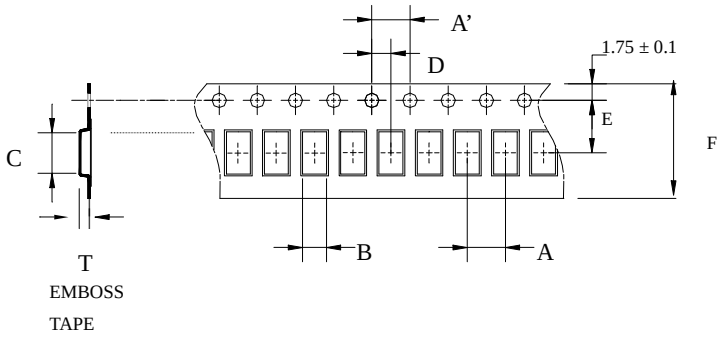

Type	A	A'	B	C	D	E	F	T	Quantity/reel	Tape material
3216	4.0± 0.1	4.0± 0.1	1.95± 0.1	3.50± 0.1	2.0± 0.05	3.5± 0.1	8.0± 0.1	1.60± 0.10	3,000pcs	Plastic (Embossed)

❖Reel Dimensions (Unit: mm)

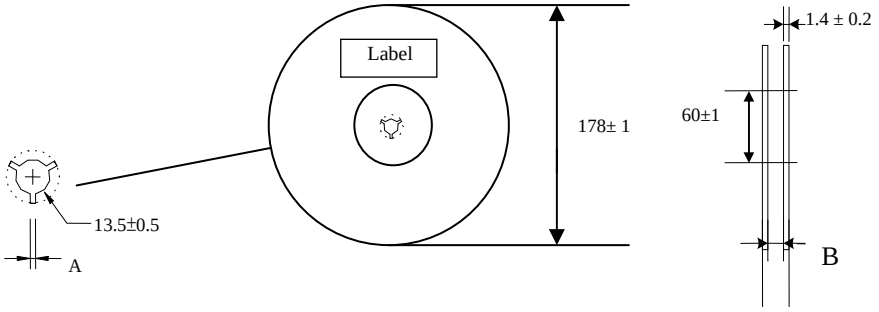

Label: Customer's Name,
ACX P/N, Q'ty, Date,
ACX Corp.

Type	A	B
3216	2.3±0.5	9.0±0.3

❖Leader and Trailer Tape

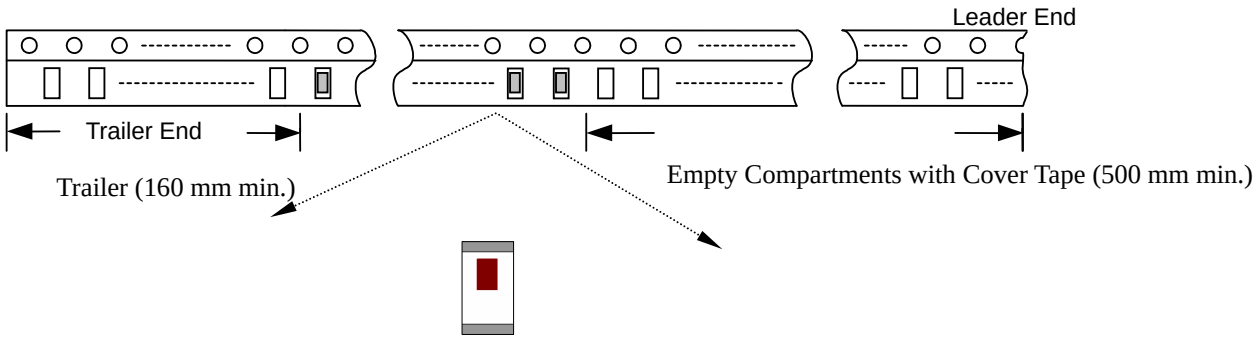

❖**Peel-off Force**

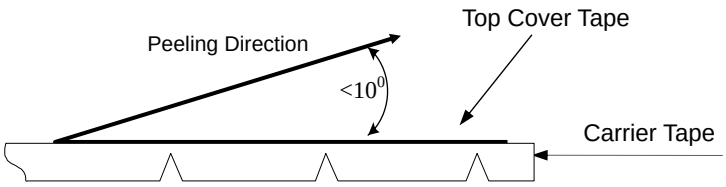

Peel-off force should be in the range of 0.1 – 0.6 N at a peel-off speed of 300±10 mm/min .

❖**Storage Conditions**

(1) Temperature: 5 ~35℃, relative humidity (RH): 45~75%.
(2) Non-corrosive environment

Notes

❖The contents of this data sheet are subject to change without notice. Please confirm the specifications and delivery conditions when placing your order.

Mechanical & Environmental Characteristics

Item	Requirements	Procedure
Solderability	1. No apparent damage 2. More than 95% of the terminal electrode shall be covered with new solder	1. Preheat: 120± 5 °C 2. Solder: 245± 5°C for 5± 1 sec
Soldering strength (Termination Adhesion)	1. 1kg minimum	1. Solder specimen onto test jig. 2. Apply push force at 0.5mm/s until electrode pads are peeled off or ceramic are broken. Pushing force is applied to longitude direction
Deflection (Substrate Bending)	1. No apparent damage	1. Solder specimen onto test jig (FR4, 0.8mm) using the recommend soldering profile. 2. Apply a bending force of 2mm deflection 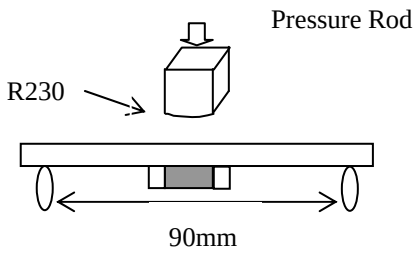
Heat/Humidity Resistance	1. No apparent damage 2. Fulfill the electrical specification after test	1. Temperature: 85± 2°C 2. Humidity: 90% ~ 95% RH 3. Duration: 1000±48hrs 4. Recovery: 1-2hrs
Thermal shock (Temperature Cycle)	1. No apparent damage 2. Fulfill the electrical specification after test	1. One cycle/step 1：125 ± 5°C for 30 min step 2：- 40 ± 5°C for 30 min 2. No of cycles：100 3. Recovery:1-2 hrs
Low Temperature Resistance	1. No apparent damage 2. Fulfill the electrical specification after test	1. Temperature: -40± 5 °C 2. Duration: 500 ±24hrs 3. Recovery: 1-2hrs

Soldering Conditions

❖**Typical Soldering Profile for Lead-free Process**

Reflow Soldering :

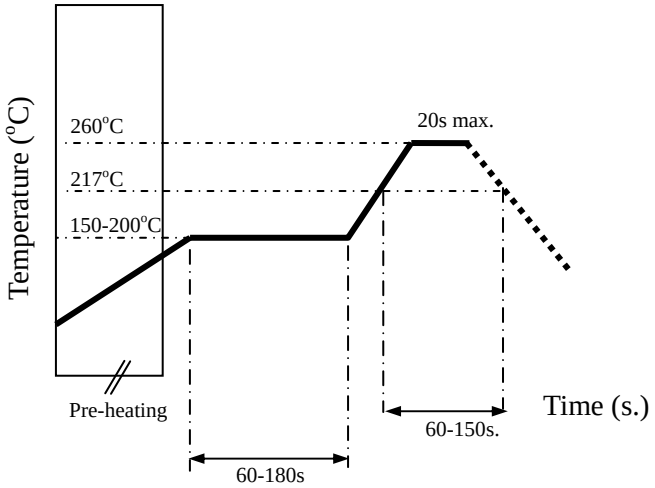

Notes

❖The contents of this data sheet are subject to change without notice. Please confirm the specifications and delivery conditions when placing your order.

Advanced Ceramic X Corp.
16 Tzu Chiang Road, Hsinchu Industrial District Hsinchu Hsien 303, Taiwan
TEL:886-3-5987008 FAX:886-3-5987001
E-mail: acx@acxc.com.tw
http://www.acxc.com.tw