FCC Test Report

Applicant	:	**Shenzhen SYD Network Technology Co .,Ltd**
Address	:	**4F, Building NO.4, Lianchuang Science and Technology Park, 21st Bulan Rd, Nanwan Street, Longgang District, Shenzhen, China**
Product Name	:	**Portable Power Station**
Report Date	:	**Sept. 05, 2024**

Shenzhen Anbotek Compliance Laboratory Limited

Contents

1. General Information 6
1.1. Client Information 6
1.2. Description of Device (EUT) 6
1.3. Auxiliary Equipment Used During Test 7
1.4. Operation channel list 7
1.5. Description of Test Modes 7
1.6. Measurement Uncertainty 8
1.7. Test Summary 8
1.8. Description of Test Facility 9
1.9. Disclaimer 9
1.10. Test Equipment List 10
2. Antenna requirement 12
2.1. Conclusion 12
3. Conducted Emission at AC power line 13
3.1. EUT Operation 13
3.2. Test Setup 13
3.3. Test Data 14
4. Occupied Bandwidth 16
4.1. EUT Operation 16
4.2. Test Setup 16
4.3. Test Data 16
5. Maximum Conducted Output Power 17
5.1. EUT Operation 17
5.2. Test Setup 17
5.3. Test Data 17
6. Power Spectral Density 18
6.1. EUT Operation 18
6.2. Test Setup 18
6.3. Test Data 18
7. Emissions in non-restricted frequency bands 19
7.1. EUT Operation 19
7.2. Test Setup 19
7.3. Test Data 19
8. Band edge emissions (Radiated) 20
8.1. EUT Operation 20
8.2. Test Setup 21
8.3. Test Data 22
9. Emissions in frequency bands (below 1GHz) 26
9.1. EUT Operation 26
9.2. Test Setup 27
9.3. Test Data 28
10. Emissions in frequency bands (above 1GHz) 30

10.1. EUT Operation 30
10.2. Test Setup 31
10.3. Test Data 32
APPENDIX I -- TEST SETUP PHOTOGRAPH 35
APPENDIX II -- EXTERNAL PHOTOGRAPH 35
APPENDIX III -- INTERNAL PHOTOGRAPH 35

TEST REPORT

Applicant	:	Shenzhen SYD Network Technology Co .,Ltd
Manufacturer	:	Shenzhen SYD Network Technology Co .,Ltd
Product Name	:	Portable Power Station
Model No.	:	SYD2400, N052, F2400, P2400, 2400A, G2400, AS2400JP, HS2400, T2400, S2400, GK-2400, M2400, PS2400, PH2400
Trade Mark	:	N/A
Rating(s)	:	Please see page 7
Test Standard(s)	:	**47 CFR Part 15.247** **ANSI C63.10-2020** **KDB 558074 D01 15.247 Meas Guidance v05r02**

The device described above is tested by Shenzhen Anbotek Compliance Laboratory Limited to determine the maximum emission levels emanating from the device and the severe levels of the device can endure and its performance criterion. The measurement results are contained in this test report and Shenzhen Anbotek Compliance Laboratory Limited is assumed full of responsibility for the accuracy and completeness of these measurements. Also, this report shows that the EUT (Equipment Under Test) is technically compliant with above listed standard(s) requirements.

This report applies to above tested sample only and shall not be reproduced in part without written approval of Shenzhen Anbotek Compliance Laboratory Limited.

Date of Receipt	Aug. 08, 2024
Date of Test	Aug. 08, 2024 to Aug. 26, 2024
Prepared By	Nian xiu Chen (Nianxiu Chen)
Approved & Authorized Signer	Edward pan (Edward Pan)

Revision History

Report Version	Description	Issued Date
R00	Original Issue.	Sept. 05, 2024

1. General Information

1.1. Client Information

Applicant	:	Shenzhen SYD Network Technology Co .,Ltd
Address	:	4F, Building NO.4, Lianchuang Science and Technology Park, 21st Bulan Rd, Nanwan Street, Longgang District, Shenzhen, China
Manufacturer	:	Shenzhen SYD Network Technology Co .,Ltd
Address	:	4F, Building NO.4, Lianchuang Science and Technology Park, 21st Bulan Rd, Nanwan Street, Longgang District, Shenzhen, China
Factory	:	Shenzhen SYD Network Technology Co .,Ltd
Address	:	4F, Building NO.4, Lianchuang Science and Technology Park, 21st Bulan Rd, Nanwan Street, Longgang District, Shenzhen, China

1.2. Description of Device (EUT)

Product Name	:	Portable Power Station
Model No.	:	SYD2400, N052, F2400, P2400, 2400A, G2400, AS2400JP, HS2400, T2400, S2400, GK-2400, M2400, PS2400, PH2400 (Note: All samples are the same except the model number, so we prepare "SYD2400" for test only.)
Trade Mark	:	N/A
Test Power Supply	:	AC 120V/60Hz; DC 51.2V Battery inside
Test Sample No.	:	1-2-1(Normal Sample), 1-2-2(Engineering Sample)
Adapter	:	N/A
RF Specification		
Operation Frequency	:	802.11b/g/n(HT20): 2412MHz to 2462MHz; 802.11n(HT40): 2422MHz to 2452MHz
Number of Channel	:	802.11b/g/n(HT20): 11 Channels; 802.11n(HT40): 7 Channels
Modulation Type	:	802.11b: DSSS(CCK, DQPSK, DBPSK); 802.11g: OFDM(BPSK, QPSK, 16QAM, 64QAM); 802.11n(HT20 and HT40): OFDM (BPSK, QPSK, 16QAM, 64QAM)
Antenna Type	:	PCB Antenna
Antenna Gain(Peak)	:	4.16dBi

Remark:
(1) All of the RF specification are provided by customer.
(2) For a more detailed features description, please refer to the manufacturer's specifications or the User's Manual.

Rating(s):

1.3. Auxiliary Equipment Used During Test

Title	Manufacturer	Model No.	Serial No.
/	/	/	/

1.4. Operation channel list

Operation Band:

Channel	Frequency (MHz)	Channel	Frequency (MHz)	Channel	Frequency (MHz)
1	2412	5	2432	9	2452
2	2417	6	2437	10	2457
3	2422	7	2442	11	2462
4	2427	8	2447	/	/

1.5. Description of Test Modes

Pretest Modes	Descriptions
TM1	Keep the EUT in 802.11b transmitting mode.
TM2	Keep the EUT in 802.11g transmitting mode.
TM3	Keep the EUT in 802.11n(HT20) transmitting mode.
TM4	Keep the EUT in 802.11n(HT40) transmitting mode.

1.6. Measurement Uncertainty

Parameter	Uncertainty
Conducted emissions (AMN 150kHz~30MHz)	3.4dB
Occupied Bandwidth	925Hz
Conducted Output Power	0.76dB
Power Spectral Density	0.76dB
Conducted Spurious Emission	1.24dB
Radiated spurious emissions (above 1GHz)	1G-6GHz: 4.78dB; 6G-18GHz: 4.88dB 18G-40GHz: 5.68dB
Radiated emissions (Below 30MHz)	3.53dB
Radiated spurious emissions (30MHz~1GHz)	Horizontal: 3.92dB; Vertical: 4.52dB
The measurement uncertainty and decision risk evaluated according to AB/WI-RF-F-032. This uncertainty represents an expanded uncertainty expressed at approximately the 95% confidence level using a coverage factor of k=2.	

1.7. Test Summary

Test Items	Test Modes	Status
Antenna requirement	/	P
Conducted Emission at AC power line	Mode1,2,3,4	P
Occupied Bandwidth	Mode1,2,3,4	P
Maximum Conducted Output Power	Mode1,2,3,4	P
Power Spectral Density	Mode1,2,3,4	P
Emissions in non-restricted frequency bands	Mode1,2,3,4	P
Band edge emissions (Radiated)	Mode1,2,3,4	P
Emissions in frequency bands (below 1GHz)	Mode1,2,3,4	P
Emissions in frequency bands (above 1GHz)	Mode1,2,3,4	P
Note: P: Pass N: N/A, not applicable		

1.8. Description of Test Facility

The test facility is recognized, certified, or accredited by the following organizations:

FCC-Registration No.: 434132
Shenzhen Anbotek Compliance Laboratory Limited, EMC Laboratory has been registered and fully described in a report filed with the (FCC) Federal Communications Commission. The acceptance letter from the FCC is maintained in our files. Registration No. 434132.

ISED-Registration No.: 8058A
Shenzhen Anbotek Compliance Laboratory Limited, EMC Laboratory has been registered and fully described in a report filed with the (ISED) Innovation, Science and Economic Development Canada. The acceptance letter from the ISED is maintained in our files. Registration 8058A.

Test Location
Shenzhen Anbotek Compliance Laboratory Limited.
Sogood Industrial Zone Laboratory & 1/F. of Building D, Sogood Science and Technology Park, Sanwei Community, Hangcheng Subdistrict, Bao'an District, Shenzhen, Guangdong, China.

1.9. Disclaimer

1. The test report is invalid if not marked with the signatures of the persons responsible for preparing and approving the test report.
2. The test report is invalid if there is any evidence and/or falsification.
3. The results documented in this report apply only to the tested sample, under the conditions and modes of operation as described herein.
4. This document may not be altered or revised in any way unless done so by Anbotek and all revisions are duly noted in the revisions section.
5. Content of the test report, in part or in full, cannot be used for publicity and/or promotional purposes without prior written approval from the laboratory.
6. The authenticity of the information provided by the customer is the responsibility of the customer and the laboratory is not responsible for its authenticity.

The laboratory is only responsible for the data released by the laboratory, except for the part provided by the applicant.

1.10. Test Equipment List

Conducted Emission at AC power line						
Item	Equipment	Manufacturer	Model No.	Serial No.	Last Cal.	Cal.Due Date
1	L.I.S.N. Artificial Mains Network	Rohde & Schwarz	ENV216	100055	2024-01-18	2025-01-17
2	Three Phase V-type Artificial Power Network	CYBERTEK	EM5040DT	E215040DT001	2024-01-17	2025-01-16
3	Software Name EZ-EMC	Farad Technology	ANB-03A	N/A	/	/
4	EMI Test Receiver	Rohde & Schwarz	ESPI3	100926	2023-10-12	2024-10-11

Occupied Bandwidth Maximum Conducted Output Power Power Spectral Density Emissions in non-restricted frequency bands						
Item	Equipment	Manufacturer	Model No.	Serial No.	Last Cal.	Cal.Due Date
1	Constant Temperature Humidity Chamber	ZHONGJIAN	ZJ-KHWS80B	N/A	2023-10-16	2024-10-15
2	DC Power Supply	IVYTECH	IV3605	1804D360510	2023-10-20	2024-10-19
3	Spectrum Analyzer	Rohde & Schwarz	FSV40-N	102150	2024-05-06	2025-05-05
4	MXA Spectrum Analysis	KEYSIGHT	N9020A	MY50531823	2024-02-22	2025-02-21
5	Oscilloscope	Tektronix	MDO3012	C020298	2023-10-12	2024-10-11
6	MXG RF Vector Signal Generator	Agilent	N5182A	MY47420647	2024-02-04	2025-02-03

Band edge emissions (Radiated) Emissions in frequency bands (above 1GHz)						
Item	Equipment	Manufacturer	Model No.	Serial No.	Last Cal.	Cal.Due Date
1	EMI Test Receiver	Rohde & Schwarz	ESR26	101481	2024-01-23	2025-01-22
2	EMI Preamplifier	SKET Electronic	LNPA-0118G-45	SKET-PA-002	2024-01-17	2025-01-16
3	Double Ridged Horn Antenna	SCHWARZBECK	BBHA 9120D	02555	2022-10-16	2025-10-15
4	EMI Test Software EZ-EMC	SHURPLE	N/A	N/A	/	/
5	Horn Antenna	A-INFO	LB-180400-KF	J211060628	2023-10-12	2024-10-11
6	Spectrum Analyzer	Rohde & Schwarz	FSV40-N	102150	2024-05-06	2025-05-05
7	Amplifier	Talent Microwave	TLLA18G40G-50-30	23022802	2024-05-07	2025-05-06

Emissions in frequency bands (below 1GHz)						
Item	Equipment	Manufacturer	Model No.	Serial No.	Last Cal.	Cal.Due Date
1	EMI Test Receiver	Rohde & Schwarz	ESR26	101481	2024-01-23	2025-01-22
2	Pre-amplifier	SONOMA	310N	186860	2024-01-17	2025-01-16
3	Bilog Broadband Antenna	Schwarzbeck	VULB9163	345	2022-10-23	2025-10-22
4	Loop Antenna (9K-30M)	Schwarzbeck	FMZB1519 B	00053	2023-10-12	2024-10-11
5	EMI Test Software EZ-EMC	SHURPLE	N/A	N/A	/	/

2. Antenna requirement

Test Requirement:	Refer to 47 CFR Part 15.203, an intentional radiator shall be designed to ensure that no antenna other than that furnished by the responsible party shall be used with the device. The use of a permanently attached antenna or of an antenna that uses a unique coupling to the intentional radiator shall be considered sufficient to comply with the provisions of this section.

2.1. Conclusion

The antenna is a **PCB Antenna** which permanently attached, and the best case gain of the antenna is **4.16dBi**. It complies with the standard requirement.

3. Conducted Emission at AC power line

Test Requirement:	Refer to 47 CFR 15.207(a), Except as shown in paragraphs (b)and (c)of this section, for an intentional radiator that is designed to be connected to the public utility (AC) power line, the radio frequency voltage that is conducted back onto the AC power line on any frequency or frequencies, within the band 150 kHz to 30 MHz, shall not exceed the limits in the following table, as measured using a 50 μH/50 ohms line impedance stabilization network (LISN).
Test Limit:	

Frequency of emission (MHz)	Conducted limit (dBμV)	
	Quasi-peak	Average
0.15-0.5	66 to 56*	56 to 46*
0.5-5	56	46
5-30	60	50

*Decreases with the logarithm of the frequency.

Test Method:	ANSI C63.10-2020 section 6.2
Procedure:	Refer to ANSI C63.10-2020 section 6.2, standard test method for ac power-line conducted emissions from unlicensed wireless devices

3.1. EUT Operation

Operating Environment:	
Test mode:	1: 802.11b mode: Keep the EUT in 802.11b transmitting mode. 2: 802.11g mode: Keep the EUT in 802.11g transmitting mode. 3: 802.11n(HT20) mode: Keep the EUT in 802.11n(HT20) transmitting mode. 4: 802.11n(HT40) mode: Keep the EUT in 802.11n(HT40) transmitting mode.

3.2. Test Setup

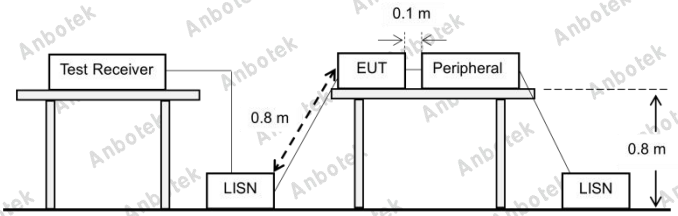

3.3. Test Data

Temperature:	22.7 °C	Humidity:	50 %	Atmospheric Pressure:	101 kPa

TM2 / Line: Line / Band: 2400-2483.5 MHz / BW: 20 / CH: L

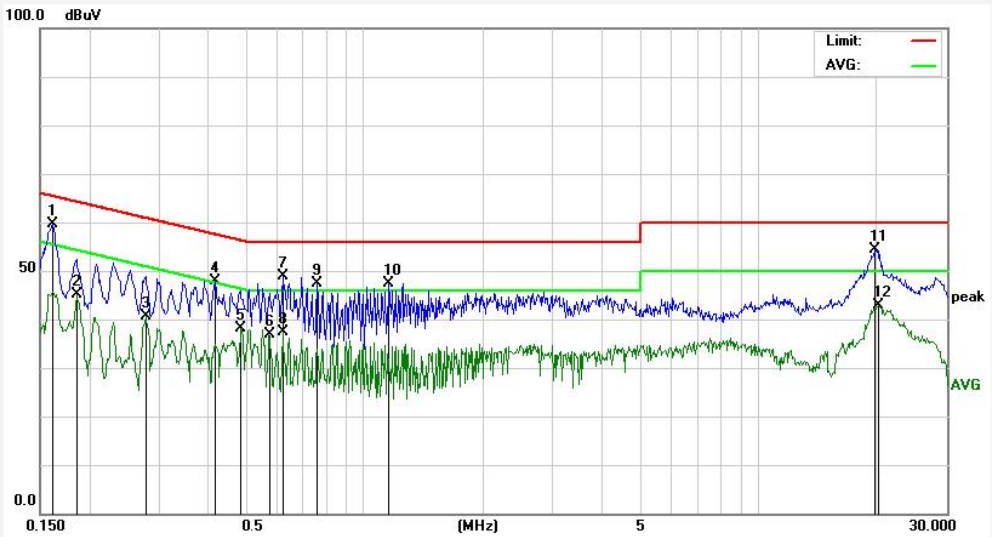

No.	Freq. (MHz)	Reading (dBuV)	Factor (dB)	Result (dBuV)	Limit (dBuV)	Over Limit (dB)	Detector	Remark
1	0.1620	40.66	18.99	59.65	65.36	-5.71	QP	
2	0.1859	26.13	18.95	45.08	54.21	-9.13	AVG	
3	0.2779	21.67	19.06	40.73	50.88	-10.15	AVG	
4	0.4179	28.92	18.95	47.87	57.49	-9.62	QP	
5	0.4859	19.16	19.08	38.24	46.24	-8.00	AVG	
6	0.5738	17.77	19.02	36.79	46.00	-9.21	AVG	
7	0.6219	29.75	19.03	48.78	56.00	-7.22	QP	
8	0.6219	18.34	19.03	37.37	46.00	-8.63	AVG	
9	0.7620	28.35	19.11	47.46	56.00	-8.54	QP	
10	1.1539	28.45	18.95	47.40	56.00	-8.60	QP	
11	19.6818	35.62	18.80	54.42	60.00	-5.58	QP	
12	20.2500	24.19	18.79	42.98	50.00	-7.02	AVG	

Temperature:	22.7 °C	Humidity:	50 %	Atmospheric Pressure:	101 kPa

TM2 / Line: Neutral / Band: 2400-2483.5 MHz / BW: 20 / CH: L

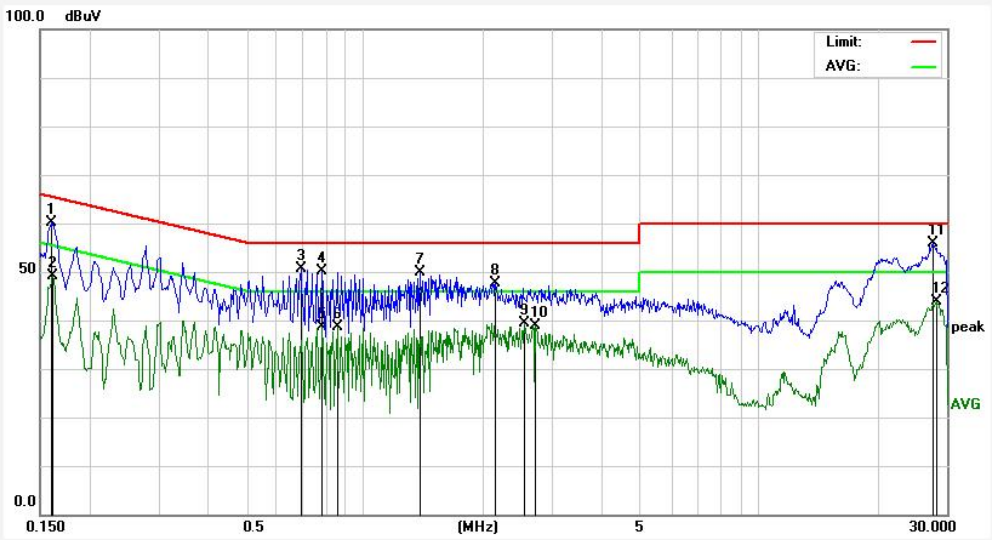

No.	Freq. (MHz)	Reading (dBuV)	Factor (dB)	Result (dBuV)	Limit (dBuV)	Over Limit (dB)	Detector	Remark
1	0.1597	41.06	18.99	60.05	65.47	-5.42	QP	
2	0.1620	30.20	18.99	49.19	55.36	-6.17	AVG	
3	0.6899	31.40	19.14	50.54	56.00	-5.46	QP	
4	0.7820	30.91	19.10	50.01	56.00	-5.99	QP	
5	0.7820	19.63	19.10	38.73	46.00	-7.27	AVG	
6	0.8539	19.48	19.05	38.53	46.00	-7.47	AVG	
7	1.3859	30.96	18.93	49.89	56.00	-6.11	QP	
8	2.1459	28.82	18.88	47.70	56.00	-8.30	QP	
9	2.5419	20.45	18.86	39.31	46.00	-6.69	AVG	
10	2.7099	19.94	18.86	38.80	46.00	-7.20	AVG	
11	27.6140	37.09	18.84	55.93	60.00	-4.07	QP	
12	28.2340	24.99	18.87	43.86	50.00	-6.14	AVG	

Note:Only record the worst data in the report.

4. Occupied Bandwidth

Test Requirement:	47 CFR 15.247(a)(2)
Test Limit:	Refer to 47 CFR 15.247(a)(2), Systems using digital modulation techniques may operate in the 902-928 MHz, and 2400-2483.5 MHz bands. The minimum 6 dB bandwidth shall be at least 500 kHz.
Test Method:	ANSI C63.10-2020, section 11.8 KDB 558074 D01 15.247 Meas Guidance v05r02
Procedure:	11.8.1 Option 1 The steps for the first option are as follows: a) Set RBW = shall be in the range of 1% to 5% of the OBW but not less than 100 kHz. b) Set the VBW ≥ [3 × RBW]. c) Detector = peak. d) Trace mode = max-hold. e) Sweep = No faster than coupled (auto) time. f) Allow the trace to stabilize. g) Measure the maximum width of the emission by placing two markers, one at the lowest frequency and the other at the highest frequency of the envelope of the spectral display, such that each marker is at or slightly below the "−6 dB down amplitude". If a marker is below this "−6 dB down amplitude" value, then it shall be as close as possible to this value. 11.8.2 Option 2 The automatic bandwidth measurement capability of an instrument may be employed using the X dB bandwidth mode with X set to 6 dB, if the functionality described in 11.8.1 (i.e., RBW = 100 kHz, VBW ≥ 3 × RBW, and peak detector with maximum hold) is implemented by the instrumentation function. When using this capability, care shall be taken so that the bandwidth measurement is not influenced by any intermediate power nulls in the fundamental emission that might be ≥ 6 dB.

4.1. EUT Operation

Operating Environment:	
Test mode:	1: 802.11b mode: Keep the EUT in 802.11b transmitting mode. 2: 802.11g mode: Keep the EUT in 802.11g transmitting mode. 3: 802.11n(HT20) mode: Keep the EUT in 802.11n(HT20) transmitting mode. 4: 802.11n(HT40) mode: Keep the EUT in 802.11n(HT40) transmitting mode.

4.2. Test Setup

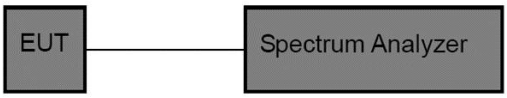

4.3. Test Data

Temperature:	24.3 °C	Humidity:	56 %	Atmospheric Pressure:	101 kPa

Please Refer to Appendix for Details.

5. Maximum Conducted Output Power

Test Requirement:	47 CFR 15.247(b)(3)
Test Limit:	Refer to 47 CFR 15.247(b)(3), For systems using digital modulation in the 902-928 MHz, 2400-2483.5 MHz, and 5725-5850 MHz bands: 1 Watt. As an alternative to a peak power measurement, compliance with the one Watt limit can be based on a measurement of the maximum conducted output power. Maximum Conducted Output Power is defined as the total transmit power delivered to all antennas and antenna elements averaged across all symbols in the signaling alphabet when the transmitter is operating at its maximum power control level. Power must be summed across all antennas and antenna elements. The average must not include any time intervals during which the transmitter is off or is transmitting at a reduced power level. If multiple modes of operation are possible (e.g., alternative modulation methods), the maximum conducted output power is the highest total transmit power occurring in any mode.
Test Method:	ANSI C63.10-2020, section 11.9.2 KDB 558074 D01 15.247 Meas Guidance v05r02
Procedure:	ANSI C63.10-2020, section 11.9.2 Maximum conducted (average) output power

5.1. EUT Operation

Operating Environment:	
Test mode:	1: 802.11b mode: Keep the EUT in 802.11b transmitting mode. 2: 802.11g mode: Keep the EUT in 802.11g transmitting mode. 3: 802.11n(HT20) mode: Keep the EUT in 802.11n(HT20) transmitting mode. 4: 802.11n(HT40) mode: Keep the EUT in 802.11n(HT40) transmitting mode.

5.2. Test Setup

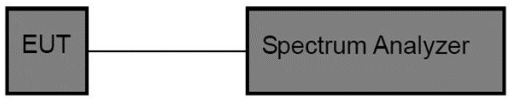

5.3. Test Data

Temperature:	24.3 °C	Humidity:	56 %	Atmospheric Pressure:	101 kPa

Please Refer to Appendix for Details.

6. Power Spectral Density

Test Requirement:	47 CFR 15.247(e)
Test Limit:	Refer to 47 CFR 15.247(e), For digitally modulated systems, the power spectral density conducted from the intentional radiator to the antenna shall not be greater than 8 dBm in any 3 kHz band during any time interval of continuous transmission. This power spectral density shall be determined in accordance with the provisions of paragraph (b) of this section. The same method of determining the conducted output power shall be used to determine the power spectral density.
Test Method:	ANSI C63.10-2020, section 11.10 KDB 558074 D01 15.247 Meas Guidance v05r02
Procedure:	ANSI C63.10-2020, section 11.10, Maximum power spectral density level in the fundamental emission

6.1. EUT Operation

Operating Environment:	
Test mode:	1: 802.11b mode: Keep the EUT in 802.11b transmitting mode. 2: 802.11g mode: Keep the EUT in 802.11g transmitting mode. 3: 802.11n(HT20) mode: Keep the EUT in 802.11n(HT20) transmitting mode. 4: 802.11n(HT40) mode: Keep the EUT in 802.11n(HT40) transmitting mode.

6.2. Test Setup

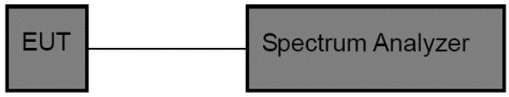

6.3. Test Data

Temperature:	24.3 °C	Humidity:	56 %	Atmospheric Pressure:	101 kPa

Please Refer to Appendix for Details.

7. Emissions in non-restricted frequency bands

Test Requirement:	47 CFR 15.247(d), 15.209, 15.205
Test Limit:	Refer to 47 CFR 15.247(d), In any 100 kHz bandwidth outside the frequency band in which the spread spectrum or digitally modulated intentional radiator is operating, the radio frequency power that is produced by the intentional radiator shall be at least 20 dB below that in the 100 kHz bandwidth within the band that contains the highest level of the desired power, based on either an RF conducted or a radiated measurement, provided the transmitter demonstrates compliance with the peak conducted power limits. If the transmitter complies with the conducted power limits based on the use of RMS averaging over a time interval, as permitted under paragraph (b)(3) of this section, the attenuation required under this paragraph shall be 30 dB instead of 20 dB. Attenuation below the general limits specified in § 15.209(a) is not required.
Test Method:	ANSI C63.10-2020 section 11.11 KDB 558074 D01 15.247 Meas Guidance v05r02
Procedure:	ANSI C63.10-2020 Section 11.11.1, Section 11.11.2, Section 11.11.3

7.1. EUT Operation

Operating Environment:	
Test mode:	1: 802.11b mode: Keep the EUT in 802.11b transmitting mode. 2: 802.11g mode: Keep the EUT in 802.11g transmitting mode. 3: 802.11n(HT20) mode: Keep the EUT in 802.11n(HT20) transmitting mode. 4: 802.11n(HT40) mode: Keep the EUT in 802.11n(HT40) transmitting mode.

7.2. Test Setup

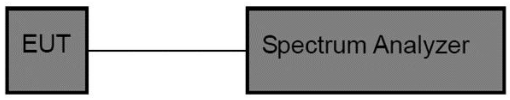

7.3. Test Data

Temperature:	24.3 °C	Humidity:	56 %	Atmospheric Pressure:	101 kPa

Please Refer to Appendix for Details.

8. Band edge emissions (Radiated)

<table>
<tr><td>Test Requirement:</td><td>Refer to 47 CFR 15.247(d), In addition, radiated emissions which fall in the restricted bands, as defined in § 15.205(a), must also comply with the radiated emission limits specified in § 15.209(a)(see § 15.205(c)).`</td></tr>
<tr><td>Test Limit:</td><td>
<table>
<tr><th>Frequency (MHz)</th><th>Field strength (microvolts/meter)</th><th>Measurement distance (meters)</th></tr>
<tr><td>0.009-0.490</td><td>2400/F(kHz)</td><td>300</td></tr>
<tr><td>0.490-1.705</td><td>24000/F(kHz)</td><td>30</td></tr>
<tr><td>1.705-30.0</td><td>30</td><td>30</td></tr>
<tr><td>30-88</td><td>100 **</td><td>3</td></tr>
<tr><td>88-216</td><td>150 **</td><td>3</td></tr>
<tr><td>216-960</td><td>200 **</td><td>3</td></tr>
<tr><td>Above 960</td><td>500</td><td>3</td></tr>
</table>
** Except as provided in paragraph (g), fundamental emissions from intentional radiators operating under this section shall not be located in the frequency bands 54-72 MHz, 76-88 MHz, 174-216 MHz or 470-806 MHz. However, operation within these frequency bands is permitted under other sections of this part, e.g., §§ 15.231 and 15.241.
In the emission table above, the tighter limit applies at the band edges.
The emission limits shown in the above table are based on measurements employing a CISPR quasi-peak detector except for the frequency bands 9–90 kHz, 110–490 kHz and above 1000 MHz. Radiated emission limits in these three bands are based on measurements employing an average detector.
</td></tr>
<tr><td>Test Method:</td><td>ANSI C63.10-2020 section 6.10
KDB 558074 D01 15.247 Meas Guidance v05r02</td></tr>
<tr><td>Procedure:</td><td>ANSI C63.10-2020 section 6.10.5.2</td></tr>
</table>

8.1. EUT Operation

<table>
<tr><td colspan="2">Operating Environment:</td></tr>
<tr><td>Test mode:</td><td>1: 802.11b mode: Keep the EUT in 802.11b transmitting mode.
2: 802.11g mode: Keep the EUT in 802.11g transmitting mode.
3: 802.11n(HT20) mode: Keep the EUT in 802.11n(HT20) transmitting mode.
4: 802.11n(HT40) mode: Keep the EUT in 802.11n(HT40) transmitting mode.</td></tr>
</table>

8.2. Test Setup

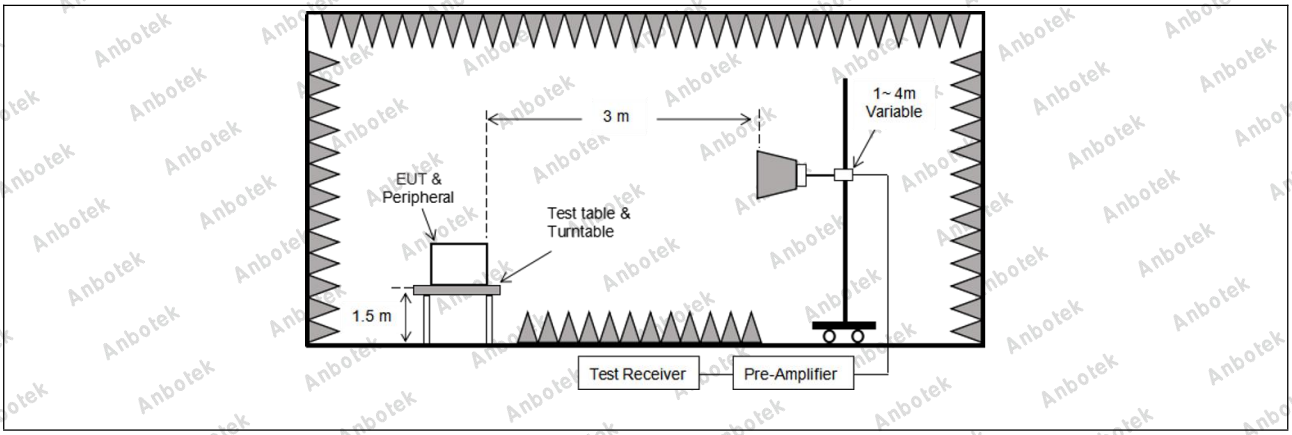

8.3. Test Data

Temperature:	24.3 °C	Humidity:	56 %	Atmospheric Pressure:	101 kPa

TM1 / CH: L						
Peak value:						
Frequency (MHz)	Reading (dBuV)	Factor (dB/m)	Result (dBuV/m)	Limit Line (dBuV/m)	Over Limit (dB)	Polarization
2310.00	39.05	9.58	48.63	74.00	-25.37	Horizontal
2390.00	41.06	9.73	50.79	74.00	-23.21	Horizontal
2310.00	40.49	9.58	50.07	74.00	-23.93	Vertical
2390.00	46.78	9.73	56.51	74.00	-17.49	Vertical
Average value:						
Frequency (MHz)	Reading (dBuV)	Factor (dB/m)	Result (dBuV/m)	Limit Line (dBuV/m)	Over Limit (dB)	Polarization
2310.00	29.72	9.58	39.30	54.00	-14.70	Horizontal
2390.00	36.99	9.73	46.72	54.00	-7.28	Horizontal
2310.00	30.69	9.58	40.27	54.00	-13.73	Vertical
2390.00	39.37	9.73	49.10	54.00	-4.90	Vertical

TM1 / CH: H						
Peak value:						
Frequency (MHz)	Reading (dBuV)	Factor (dB/m)	Result (dBuV/m)	Limit Line (dBuV/m)	Over Limit (dB)	Polarization
2483.50	46.75	9.91	56.66	74.00	-17.34	Horizontal
2500.00	41.16	9.94	51.10	74.00	-22.90	Horizontal
2483.50	47.11	9.91	57.02	74.00	-16.98	Vertical
2500.00	40.88	9.94	50.82	74.00	-23.18	Vertical
Average value:						
Frequency (MHz)	Reading (dBuV)	Factor (dB/m)	Result (dBuV/m)	Limit Line (dBuV/m)	Over Limit (dB)	Polarization
2483.50	38.21	9.91	48.12	54.00	-5.88	Horizontal
2500.00	30.23	9.94	40.17	54.00	-13.83	Horizontal
2483.50	40.04	9.91	49.95	54.00	-4.05	Vertical
2500.00	30.42	9.94	40.36	54.00	-13.64	Vertical

Remark: 1. Result=Reading + Factor

TM2 / CH: L						
Peak value:						
Frequency (MHz)	Reading (dBuV)	Factor (dB/m)	Result (dBuV/m)	Limit Line (dBuV/m)	Over Limit (dB)	Polarization
2310.00	37.63	9.58	47.21	74.00	-26.79	Horizontal
2390.00	41.61	9.73	51.34	74.00	-22.66	Horizontal
2310.00	40.32	9.58	49.90	74.00	-24.10	Vertical
2390.00	44.27	9.73	54.00	74.00	-20.00	Vertical
Average value:						
Frequency (MHz)	Reading (dBuV)	Factor (dB/m)	Result (dBuV/m)	Limit Line (dBuV/m)	Over Limit (dB)	Polarization
2310.00	30.52	9.58	40.10	54.00	-13.90	Horizontal
2390.00	37.33	9.73	47.06	54.00	-6.94	Horizontal
2310.00	31.13	9.58	40.71	54.00	-13.29	Vertical
2390.00	36.57	9.73	46.30	54.00	-7.70	Vertical

TM2 / CH: H						
Peak value:						
Frequency (MHz)	Reading (dBuV)	Factor (dB/m)	Result (dBuV/m)	Limit Line (dBuV/m)	Over Limit (dB)	Polarization
2483.50	46.79	9.91	56.70	74.00	-17.30	Horizontal
2500.00	41.27	9.94	51.21	74.00	-22.79	Horizontal
2483.50	46.95	9.91	56.86	74.00	-17.14	Vertical
2500.00	40.84	9.94	50.78	74.00	-23.22	Vertical
Average value:						
Frequency (MHz)	Reading (dBuV)	Factor (dB/m)	Result (dBuV/m)	Limit Line (dBuV/m)	Over Limit (dB)	Polarization
2483.50	36.38	9.91	46.29	54.00	-7.71	Horizontal
2500.00	29.33	9.94	39.27	54.00	-14.73	Horizontal
2483.50	38.99	9.91	48.90	54.00	-5.10	Vertical
2500.00	29.95	9.94	39.89	54.00	-14.11	Vertical

Remark: 1. Result=Reading + Factor

TM3 / CH: L						
Peak value:						
Frequency (MHz)	Reading (dBuV)	Factor (dB/m)	Result (dBuV/m)	Limit Line (dBuV/m)	Over Limit (dB)	Polarization
2310.00	35.63	9.58	45.21	74.00	-28.79	Horizontal
2390.00	39.61	9.73	49.34	74.00	-24.66	Horizontal
2310.00	39.32	9.58	48.90	74.00	-25.10	Vertical
2390.00	42.27	9.73	52.00	74.00	-22.00	Vertical
Average value:						
Frequency (MHz)	Reading (dBuV)	Factor (dB/m)	Result (dBuV/m)	Limit Line (dBuV/m)	Over Limit (dB)	Polarization
2310.00	29.20	9.58	38.78	54.00	-15.22	Horizontal
2390.00	34.66	9.73	44.39	54.00	-9.61	Horizontal
2310.00	28.74	9.58	38.32	54.00	-15.68	Vertical
2390.00	34.57	9.73	44.30	54.00	-9.70	Vertical

TM3 / CH: H						
Peak value:						
Frequency (MHz)	Reading (dBuV)	Factor (dB/m)	Result (dBuV/m)	Limit Line (dBuV/m)	Over Limit (dB)	Polarization
2483.50	44.52	9.91	54.43	74.00	-19.57	Horizontal
2500.00	39.16	9.94	49.10	74.00	-24.90	Horizontal
2483.50	46.11	9.91	56.02	74.00	-17.98	Vertical
2500.00	40.88	9.94	50.82	74.00	-23.18	Vertical
Average value:						
Frequency (MHz)	Reading (dBuV)	Factor (dB/m)	Result (dBuV/m)	Limit Line (dBuV/m)	Over Limit (dB)	Polarization
2483.50	34.36	9.91	44.27	54.00	-9.73	Horizontal
2500.00	29.48	9.94	39.42	54.00	-14.58	Horizontal
2483.50	35.81	9.91	45.72	54.00	-8.28	Vertical
2500.00	30.09	9.94	40.03	54.00	-13.97	Vertical

Remark: 1. Result=Reading + Factor

TM4 / CH: L						
Peak value:						
Frequency (MHz)	Reading (dBuV)	Factor (dB/m)	Result (dBuV/m)	Limit Line (dBuV/m)	Over Limit (dB)	Polarization
2310.00	38.10	9.58	47.68	74.00	-26.32	Horizontal
2390.00	42.61	9.73	52.34	74.00	-21.66	Horizontal
2310.00	41.32	9.58	50.90	74.00	-23.10	Vertical
2390.00	44.48	9.73	54.21	74.00	-19.79	Vertical
Average value:						
Frequency (MHz)	Reading (dBuV)	Factor (dB/m)	Result (dBuV/m)	Limit Line (dBuV/m)	Over Limit (dB)	Polarization
2310.00	30.12	9.58	39.70	54.00	-14.30	Horizontal
2390.00	35.30	9.73	45.03	54.00	-8.97	Horizontal
2310.00	29.94	9.58	39.52	54.00	-14.48	Vertical
2390.00	33.97	9.73	43.70	54.00	-10.30	Vertical

TM4 / CH: H						
Peak value:						
Frequency (MHz)	Reading (dBuV)	Factor (dB/m)	Result (dBuV/m)	Limit Line (dBuV/m)	Over Limit (dB)	Polarization
2483.50	44.43	9.91	54.34	74.00	-19.66	Horizontal
2500.00	39.84	9.94	49.78	74.00	-24.22	Horizontal
2483.50	46.24	9.91	56.15	74.00	-17.85	Vertical
2500.00	41.38	9.94	51.32	74.00	-22.68	Vertical
Average value:						
Frequency (MHz)	Reading (dBuV)	Factor (dB/m)	Result (dBuV/m)	Limit Line (dBuV/m)	Over Limit (dB)	Polarization
2483.50	34.06	9.91	43.97	54.00	-10.03	Horizontal
2500.00	31.48	9.94	41.42	54.00	-12.58	Horizontal
2483.50	35.81	9.91	45.72	54.00	-8.28	Vertical
2500.00	31.09	9.94	41.03	54.00	-12.97	Vertical

Remark: 1. Result=Reading + Factor

9. Emissions in frequency bands (below 1GHz)

<table>
<tr><td>Test Requirement:</td><td>Refer to 47 CFR 15.247(d), In addition, radiated emissions which fall in the restricted bands, as defined in § 15.205(a), must also comply with the radiated emission limits specified in § 15.209(a)(see § 15.205(c)).`</td></tr>
<tr><td>Test Limit:</td><td>
<table>
<tr><th>Frequency (MHz)</th><th>Field strength (microvolts/meter)</th><th>Measurement distance (meters)</th></tr>
<tr><td>0.009-0.490</td><td>2400/F(kHz)</td><td>300</td></tr>
<tr><td>0.490-1.705</td><td>24000/F(kHz)</td><td>30</td></tr>
<tr><td>1.705-30.0</td><td>30</td><td>30</td></tr>
<tr><td>30-88</td><td>100 **</td><td>3</td></tr>
<tr><td>88-216</td><td>150 **</td><td>3</td></tr>
<tr><td>216-960</td><td>200 **</td><td>3</td></tr>
<tr><td>Above 960</td><td>500</td><td>3</td></tr>
</table>
** Except as provided in paragraph (g), fundamental emissions from intentional radiators operating under this section shall not be located in the frequency bands 54-72 MHz, 76-88 MHz, 174-216 MHz or 470-806 MHz. However, operation within these frequency bands is permitted under other sections of this part, e.g., §§ 15.231 and 15.241.
In the emission table above, the tighter limit applies at the band edges.
The emission limits shown in the above table are based on measurements employing a CISPR quasi-peak detector except for the frequency bands 9–90 kHz, 110–490 kHz and above 1000 MHz. Radiated emission limits in these three bands are based on measurements employing an average detector.
</td></tr>
<tr><td>Test Method:</td><td>ANSI C63.10-2020 section 6.6.4
KDB 558074 D01 15.247 Meas Guidance v05r02</td></tr>
<tr><td>Procedure:</td><td>ANSI C63.10-2020 section 6.6.4</td></tr>
</table>

9.1. EUT Operation

<table>
<tr><td colspan="2">Operating Environment:</td></tr>
<tr><td>Test mode:</td><td>1: 802.11b mode: Keep the EUT in 802.11b transmitting mode.
2: 802.11g mode: Keep the EUT in 802.11g transmitting mode.
3: 802.11n(HT20) mode: Keep the EUT in 802.11n(HT20) transmitting mode.
4: 802.11n(HT40) mode: Keep the EUT in 802.11n(HT40) transmitting mode.</td></tr>
</table>

9.2. Test Setup

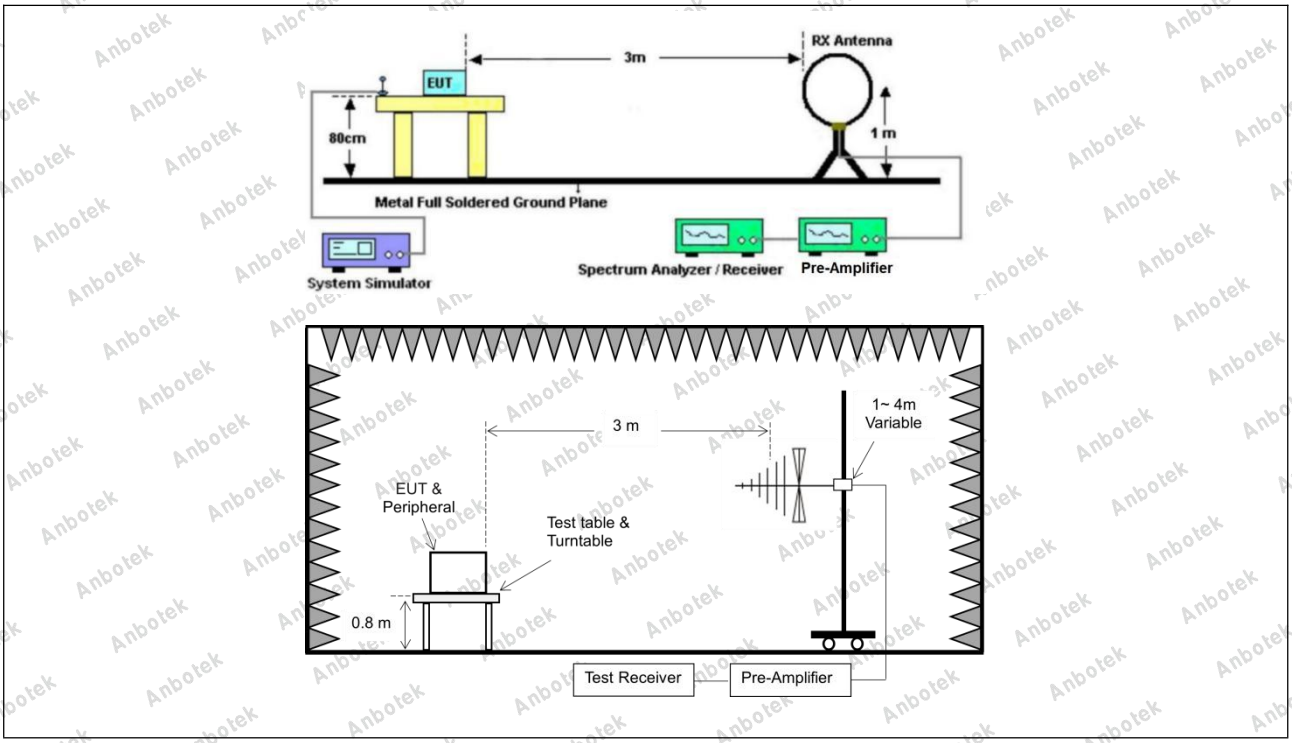

9.3. Test Data

The test results of 9kHz-30MHz was attenuated more than 20dB below the permissible limits, so the results don't record in the report.

Temperature:	20.3 °C	Humidity:	46 %	Atmospheric Pressure:	101 kPa

TM2 / Polarization: Horizontal / Band: 2400-2483.5 MHz / BW: 20 / CH: L

No.	Freq. (MHz)	Reading (dBuV)	Factor (dB/m)	Result (dBuV/m)	Limit (dBuV/m)	Over Limit (dB)	Detector	Height (cm)	degree (deg)	Remark
1	144.3348	49.79	-22.97	26.82	43.50	-16.68	QP			
2	178.7584	49.76	-23.23	26.53	43.50	-16.97	QP			
3	261.9753	51.49	-20.46	31.03	46.00	-14.97	QP			
4	289.0021	48.75	-18.12	30.63	46.00	-15.37	QP			
5	381.2487	41.53	-16.09	25.44	46.00	-20.56	QP			
6	935.5463	33.12	-5.81	27.31	46.00	-18.69	QP			

Temperature:	20.3 °C	Humidity:	46 %	Atmospheric Pressure:	101 kPa

TM2 / Polarization: Vertical / Band: 2400-2483.5 MHz / BW: 20 / CH: L

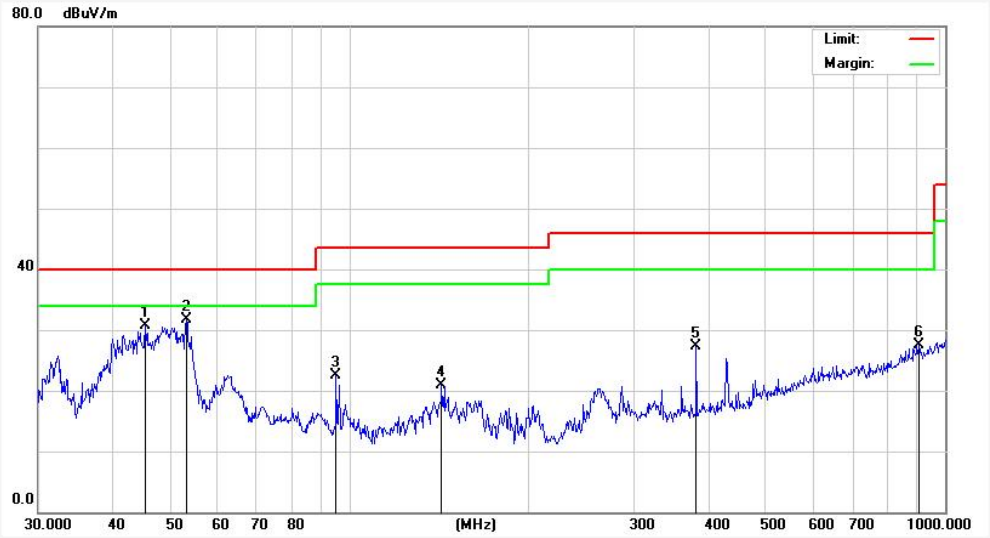

No.	Freq. (MHz)	Reading (dBuV)	Factor (dB/m)	Result (dBuV/m)	Limit (dBuV/m)	Over Limit (dB)	Detector	Height (cm)	degree (deg)	Remark
1	45.3755	45.77	-15.11	30.66	40.00	-9.34	QP			
2	53.1313	48.59	-16.93	31.66	40.00	-8.34	QP			
3	95.0930	39.74	-17.21	22.53	43.50	-20.97	QP			
4	142.8243	43.00	-22.16	20.84	43.50	-22.66	QP			
5	381.2487	41.94	-14.65	27.29	46.00	-18.71	QP			
6	903.3094	33.74	-6.19	27.55	46.00	-18.45	QP			

Note:Only record the worst data in the report.

10. Emissions in frequency bands (above 1GHz)

<table>
<tr><td>Test Requirement:</td><td>In addition, radiated emissions which fall in the restricted bands, as defined in § 15.205(a), must also comply with the radiated emission limits specified in § 15.209(a)(see § 15.205(c)).`</td></tr>
<tr><td>Test Limit:</td><td>
<table>
<tr><td>Frequency (MHz)</td><td>Field strength (microvolts/meter)</td><td>Measurement distance (meters)</td></tr>
<tr><td>0.009-0.490</td><td>2400/F(kHz)</td><td>300</td></tr>
<tr><td>0.490-1.705</td><td>24000/F(kHz)</td><td>30</td></tr>
<tr><td>1.705-30.0</td><td>30</td><td>30</td></tr>
<tr><td>30-88</td><td>100 **</td><td>3</td></tr>
<tr><td>88-216</td><td>150 **</td><td>3</td></tr>
<tr><td>216-960</td><td>200 **</td><td>3</td></tr>
<tr><td>Above 960</td><td>500</td><td>3</td></tr>
</table>
** Except as provided in paragraph (g), fundamental emissions from intentional radiators operating under this section shall not be located in the frequency bands 54-72 MHz, 76-88 MHz, 174-216 MHz or 470-806 MHz. However, operation within these frequency bands is permitted under other sections of this part, e.g., §§ 15.231 and 15.241.
In the emission table above, the tighter limit applies at the band edges.
The emission limits shown in the above table are based on measurements employing a CISPR quasi-peak detector except for the frequency bands 9–90 kHz, 110–490 kHz and above 1000 MHz. Radiated emission limits in these three bands are based on measurements employing an average detector.
</td></tr>
<tr><td>Test Method:</td><td>ANSI C63.10-2020 section 6.6.4
KDB 558074 D01 15.247 Meas Guidance v05r02</td></tr>
<tr><td>Procedure:</td><td>ANSI C63.10-2020 section 6.6.4</td></tr>
</table>

10.1. EUT Operation

<table>
<tr><td colspan="2">Operating Environment:</td></tr>
<tr><td>Test mode:</td><td>1: 802.11b mode: Keep the EUT in 802.11b transmitting mode.
2: 802.11g mode: Keep the EUT in 802.11g transmitting mode.
3: 802.11n(HT20) mode: Keep the EUT in 802.11n(HT20) transmitting mode.
4: 802.11n(HT40) mode: Keep the EUT in 802.11n(HT40) transmitting mode.</td></tr>
</table>

10.2. Test Setup

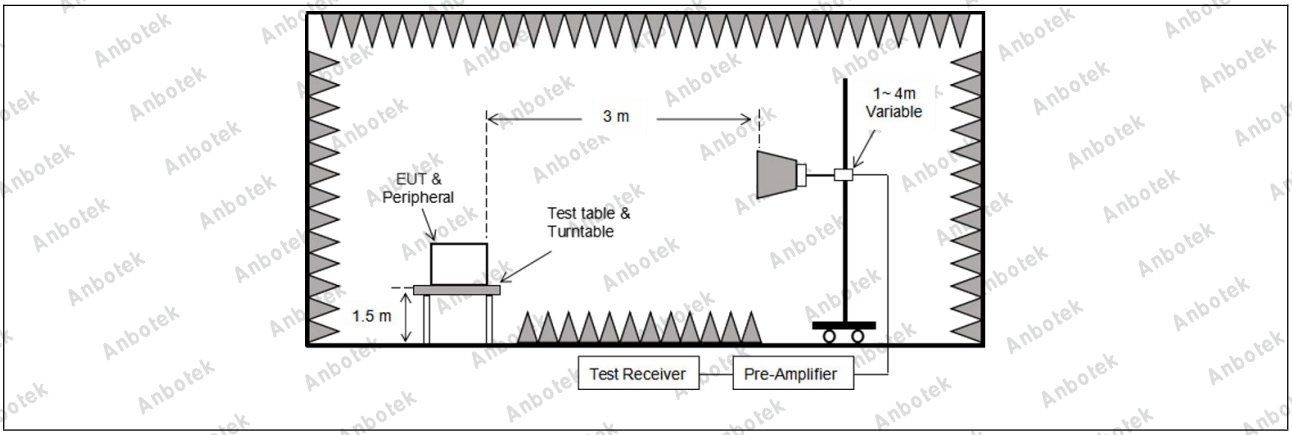

10.3. Test Data

Temperature:	23.3 °C	Humidity:	56 %	Atmospheric Pressure:	101 kPa

TM2 / CH: L						
Peak value:						
Frequency (MHz)	Reading (dBuV)	Factor (dB/m)	Result (dBuV/m)	Limit (dBuV/m)	Over Limit (dB)	polarization
4824.00	31.08	15.31	46.39	74.00	-27.61	Vertical
7236.00	31.17	18.06	49.23	74.00	-24.77	Vertical
9648.00	33.27	23.77	57.04	74.00	-16.96	Vertical
12060.00	*			74.00		Vertical
14472.00	*			74.00		Vertical
4824.00	30.33	15.31	45.64	74.00	-28.36	Horizontal
7236.00	34.00	18.06	52.06	74.00	-21.94	Horizontal
9648.00	30.34	23.77	54.11	74.00	-19.89	Horizontal
12060.00	*			74.00		Horizontal
14472.00	*			74.00		Horizontal
Average value:						
Frequency (MHz)	Reading (dBuV)	Factor (dB/m)	Result (dBuV/m)	Limit (dBuV/m)	Over Limit (dB)	polarization
4824.00	22.16	15.31	37.47	54.00	-16.53	Vertical
7236.00	22.04	18.06	40.10	54.00	-13.90	Vertical
9648.00	23.62	23.77	47.39	54.00	-6.61	Vertical
12060.00	*			54.00		Vertical
14472.00	*			54.00		Vertical
4824.00	21.86	15.31	37.17	54.00	-16.83	Horizontal
7236.00	25.24	18.06	43.30	54.00	-10.70	Horizontal
9648.00	21.09	23.77	44.86	54.00	-9.14	Horizontal
12060.00	*			54.00		Horizontal
14472.00	*			54.00		Horizontal

TM2 / CH: M						
Peak value:						
Frequency (MHz)	Reading (dBuV)	Factor (dB/m)	Result (dBuV/m)	Limit (dBuV/m)	Over Limit (dB)	polarization
4874.00	31.13	15.41	46.54	74.00	-27.46	Vertical
7311.00	31.23	18.01	49.24	74.00	-24.76	Vertical
9748.00	33.29	23.79	57.08	74.00	-16.92	Vertical
12185.00	*			74.00		Vertical
14622.00	*			74.00		Vertical
4874.00	31.18	15.41	46.59	74.00	-27.41	Horizontal
7311.00	33.62	18.01	51.63	74.00	-22.37	Horizontal
9748.00	30.66	23.79	54.45	74.00	-19.55	Horizontal
12185.00	*			74.00		Horizontal
14622.00	*			74.00		Horizontal
Average value:						
Frequency (MHz)	Reading (dBuV)	Factor (dB/m)	Result (dBuV/m)	Limit (dBuV/m)	Over Limit (dB)	polarization
4874.00	21.97	15.41	37.38	54.00	-16.62	Vertical
7311.00	22.55	18.01	40.56	54.00	-13.44	Vertical
9748.00	24.54	23.79	48.33	54.00	-5.67	Vertical
12185.00	*			54.00		Vertical
14622.00	*			54.00		Vertical
4874.00	23.29	15.41	38.70	54.00	-15.30	Horizontal
7311.00	24.71	18.01	42.72	54.00	-11.28	Horizontal
9748.00	20.38	23.79	44.17	54.00	-9.83	Horizontal
12185.00	*			54.00		Horizontal
14622.00	*			54.00		Horizontal

TM2 / CH: H						
Peak value:						
Frequency (MHz)	Reading (dBuV)	Factor (dB/m)	Result (dBuV/m)	Limit (dBuV/m)	Over Limit (dB)	polarization
4924.00	31.69	15.51	47.20	74.00	-26.80	Vertical
7386.00	31.93	17.97	49.90	74.00	-24.10	Vertical
9848.00	34.10	23.82	57.92	74.00	-16.08	Vertical
12310.00	*			74.00		Vertical
14772.00	*			74.00		Vertical
4924.00	30.57	15.51	46.08	74.00	-27.92	Horizontal
7386.00	32.58	17.97	50.55	74.00	-23.45	Horizontal
9848.00	30.26	23.82	54.08	74.00	-19.92	Horizontal
12310.00	*			74.00		Horizontal
14772.00	*			74.00		Horizontal
Average value:						
Frequency (MHz)	Reading (dBuV)	Factor (dB/m)	Result (dBuV/m)	Limit (dBuV/m)	Over Limit (dB)	polarization
4924.00	21.60	15.51	37.11	54.00	-16.89	Vertical
7386.00	21.85	17.97	39.82	54.00	-14.18	Vertical
9848.00	24.10	23.82	47.92	54.00	-6.08	Vertical
12310.00	*			54.00		Vertical
14772.00	*			54.00		Vertical
4924.00	20.93	15.51	36.44	54.00	-17.56	Horizontal
7386.00	23.05	17.97	41.02	54.00	-12.98	Horizontal
9848.00	19.87	23.82	43.69	54.00	-10.31	Horizontal
12310.00	*			54.00		Horizontal
14772.00	*			54.00		Horizontal

Remark:
1. Result =Reading + Factor
2. Test frequency are from 1GHz to 25GHz, "*" means the test results were attenuated more than 20dB below the permissible limits, so the results don't record in the report.
3. Only the worst case is recorded in the report.

APPENDIX I -- TEST SETUP PHOTOGRAPH

Please refer to separated files Appendix I -- Test Setup Photograph_RF

APPENDIX II -- EXTERNAL PHOTOGRAPH

Please refer to separated files Appendix II -- External Photograph

APPENDIX III -- INTERNAL PHOTOGRAPH

Please refer to separated files Appendix III -- Internal Photograph

---------- End of Report ----------