RF TEST REPORT

Product Name: NFC Reader

Model Name: CM04-A02

FCC ID: 2BFHR-CM04-A02

IC: 32210-CM04A02

Issued For : Chongging XF Intelligent Technology Co.Ltd.

5th Floor, Production Building, No.2, Hualong Road, Jiulongpo District, Chongging

Issued By : Shenzhen LGT Test Service Co., Ltd.

Room 205, Building 13, Zone B, Zhenxiong Industrial Park, No.177, Renmin West Road, Jinsha, Kengzi Street, Pingshan District, Shenzhen, Guangdong, China

Report Number:	LGT24C088RF03
Sample Received Date:	Mar. 19, 2024
Date of Test:	Mar. 19, 2024 – Mar. 28, 2024
Date of Issue:	Mar. 28, 2024

The test report is effective only with both signature and specialized stamp. This report shall not be reproduced except in full without the written approval of the Laboratory. The results in this report only apply to the tested sample.

TEST REPORT CERTIFICATION

Applicant:	Chongging XF Intelligent Technology Co.Ltd.
Address:	5th Floor, Production Building, No.2, Hualong Road, Jiulongpo District, Chongging
Manufacturer:	Chongging XF Intelligent Technology Co.Ltd.
Address:	5th Floor, Production Building, No.2, Hualong Road, Jiulongpo District, Chongging
Product Name:	NFC Reader
Trademark:	先锋智科 XF INTELIGENT TECH
Model Name:	CM04-A02
Sample Status:	Normal

APPLICABLE STANDARDS	
STANDARD	TEST RESULTS
FCC Part 15.225, Subpart C RSS 210 Issue 10, Amendment, April 2020 ANSI C63.10-2013	PASS

Prepared by:

Zane Shan

Zane Shan
Engineer

Approved by:

Vita Li
Technical Director

SHENZHEN LGT TEST SERVICE CO., LTD. LGT 领冠检测

Table of Contents

1. SUMMARY OF TEST RESULTS **6**

1.1 TEST FACTORY 7

1.2 MEASUREMENT UNCERTAINTY 7

2. GENERAL INFORMATION **8**

2.1 GENERAL DESCRIPTION OF THE EUT 8

2.2 DESCRIPTION OF THE TEST MODES 9

2.3 BLOCK DIAGRAM SHOWING THE CONFIGURATION OF SYSTEM TESTED 9

2.4 DESCRIPTION OF NECESSARY ACCESSORIES AND SUPPORT UNITS 10

2.5 EQUIPMENTS LIST 11

3. EMC EMISSION TEST **12**

3.1 CONDUCTED EMISSION MEASUREMENT 12

3.2 TEST PROCEDURE 13

3.3 TEST SETUP 13

3.4 EUT OPERATING CONDITIONS 13

3.5 TEST RESULTS 13

4. RADIATED EMISSION MEASUREMENT **14**

4.1 RADIATED EMISSION LIMITS 14

4.2 TEST PROCEDURE 16

4.3 TEST SETUP 17

4.4 EUT OPERATING CONDITIONS 17

4.5 FIELD STRENGTH CALCULATION 18

4.6 TEST RESULTS 19

5. FREQUENCY TOLERANCE **23**

5.1 LIMIT 23

5.2 TEST PROCEDURE 23

5.3 TEST SETUP 23

5.4 EUT OPERATION CONDITIONS 23

5.5 TEST RESULTS 24

6. 20DB BANDWIDTH **25**

6.1 LIMIT 25

6.2 TEST PROCEDURE 25

6.3 TEST SETUP 25

6.4 EUT OPERATION CONDITIONS 25

Table of Contents

6.5 TEST RESULTS 26

7. ANTENNA REQUIREMENT 27

7.1 STANDARD REQUIREMENT 27

7.2 EUT ANTENNA 27

APPENDIX 1 - PHOTOS OF TEST SETUP 28

Revision History

Rev.	Issue Date	Contents
00	Mar. 28, 2024	Initial Issue

1. SUMMARY OF TEST RESULTS

Test procedures according to the technical standards:

FCC Part 15.225, Subpart C RSS 210 Issue 10			
Standard Section	Test Item	Judgment	Remark
15.207 RSS-Gen 8.8	Conducted Emission	N/A	--
15.209 15.225(a)(b)(c)(d) RSS 210 (B.6)	Radiated Emission	PASS	--
15.225(e) RSS 210 (B.6)	Frequency Tolerance	PASS	--
15.203 RSS-Gen 6.8	Antenna Requirement	PASS	--
15.215 RSS-Gen 6.7	20dB Bandwidth	PASS	--

NOTE:

(1) 'N/A' denotes test is not applicable in this Test Report.

(2) All tests are according to ANSI C63.10-2013.

1.1 TEST FACTORY

Company Name:	Shenzhen LGT Test Service Co., Ltd.
Address:	Room 205, Building 13, Zone B, Zhenxiong Industrial Park, No.177, Renmin West Road, Jinsha, Kengzi Street, Pingshan District, Shenzhen, Guangdong, China
Accreditation Certificate	FCC Registration No.: 746540
	A2LA Certificate No.: 6727.01

1.2 MEASUREMENT UNCERTAINTY

The reported uncertainty of measurement **y** ± **U**, where expended uncertainty **U** is based on a standard uncertainty multiplied by a coverage factor of **k=2**, providing a level of confidence of approximately **95** %.

No.	Item	Uncertainty
1	RF output power, conducted	±0.68dB
2	Unwanted Emissions, conducted	±2.988dB
3	All emissions, radiated 9K-30MHz	±2.84dB
4	All emissions, radiated 30M-1GHz	±4.39dB
5	All emissions, radiated 1G-6GHz	±5.10dB
6	All emissions, radiated>6G	±5.48dB
7	Conducted Emission (9KHz-150KHz)	±2.79dB
8	Conducted Emission (150KHz-30MHz)	±2.80dB
9	Emission Bandwidth	±3.2 %

Note: The measurement uncertainty is not included in the test result.

2. GENERAL INFORMATION

2.1 GENERAL DESCRIPTION OF THE EUT

Product Name:	NFC Reader
Trademark:	先锋智科 XF INTELLIGENT TECH
Model Name:	CM04-A02
Series Model:	N/A
Model Difference:	N/A
Product Description:	Operation Frequency: 13.56MHz Modulation Type: FSK Antenna Designation: Please see Note 2.
Channel List:	Please refer to the Note 2.
Rating:	Input: DC 12V
Hardware Version:	CM04-A02-HVX.X
Software Version:	CM04-A02_SVX.X
Connecting I/O Port(s):	Please refer to the Note 1.

Note:

1. For a more detailed features description, please refer to the manufacturer's specifications or the User Manual.
2. The antenna information refers to the manufacturer provide report, applicable only to the tested sample identified in the report. Due to the incorrect antenna information, a series of problems such as the accuracy of the test results will be borne by the customer.

2.2 DESCRIPTION OF THE TEST MODES

For conducted test items and radiated spurious emissions
Each of these EUT operation mode(s) or test configuration mode(s) mentioned below was evaluated respectively.

Worst Mode	Description
Mode 1	TX Mode

Note:
(1) The measurements are performed at all Bit Rate of Transmitter, the worst data was reported.
(2) The battery is fully-charged during the radited and RF conducted test.

2.3 BLOCK DIAGRAM SHOWING THE CONFIGURATION OF SYSTEM TESTED

Radiated Spurious Emission Test

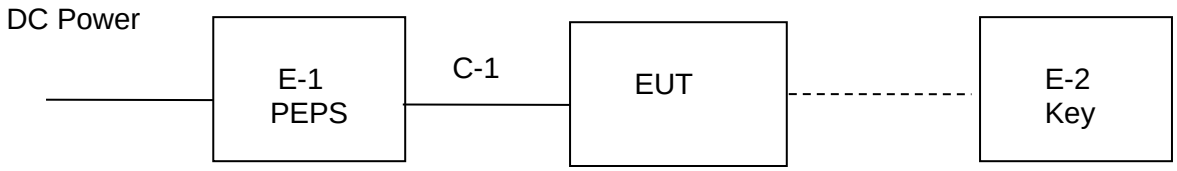

2.4 DESCRIPTION OF NECESSARY ACCESSORIES AND SUPPORT UNITS

The EUT has been tested as an independent unit together with other necessary accessories or support units. The following support units or accessories were used to form a representative test configuration during the tests.

Accessories Equipment

Description	Manufacturer	Model	S/N	Rating
NFC Tag	先锋智科 XF INTELLIGENT TECH	KE-N01	N/A	N/A
PEPS ECU	先锋智科 XF INTELLIGENT TECH	CM04-A01	N/A	N/A

Auxiliary Equipment

Description	Manufacturer	Model	S/N	Rating

Note:

(1) For detachable type I/O cable should be specified the length in cm in『Length』column.

(2) “YES” is means “with core”; “NO” is means “without core”.

2.5 EQUIPMENTS LIST

Radiated Test equipment					
Equipment	**Manufacturer**	**Model No.**	**Serial No.**	**Cal. Date**	**Cal. Until**
EMI Test Receiver	R&S	ESU8	100372	2023.04.13	2024.04.12
Active loop Antenna	ETS	6502	00049544	2022.06.02	2025.06.01
Spectrum Analyzer	Keysight	N9010B	MY60242508	2023.08.14	2024.08.13
Bilog Antenna(30M-1G)	SCHWARZBECK	VULB 9168	2705	2022.06.05	2025.06.04
Horn Antenna(1-18G)	SCHWARZBECK	3115	10SL0060	2022.06.02	2025.06.01
Horn Antenna(18-40G)	A-INFO	LB-180400-KF	J211060273	2022.06.08	2025.06.07
Pre-amplifier(30M-1G)	EMtrace	RP01A	02019	2023.04.07	2024.04.06
Pre-amplifier(1-26.5G)	Agilent	8449B	3008A4722	2023.04.07	2024.04.06
Pre-amplifier(18-40G)	com-mw	LNPA_18-40-01	18050003	2023.04.07	2024.04.06
Wireless Communications Test Set	R&S	CMW 500	137737	2023.04.13	2024.04.12
Temperature & Humidity	KTJ	TA218B	N.A	2023.04.24	2024.04.23
Temperature& Humidity test chamber	AISRY	LX-1000L	171200018	2023.08.14	2024.08.13
Antenna Tower	SAEMC	BK-4AT-BS-D	SK2021093008	N.A	N.A
Testing Software	EMC-I_V1.4.0.3_SKET				

3. EMC EMISSION TEST

3.1 CONDUCTED EMISSION MEASUREMENT

3.1.1 POWER LINE CONDUCTED EMISSION LIMITS

The radio frequency voltage that is conducted back onto the AC power line on any frequency or frequencies, within the band 150 kHz to 30 MHz, shall not exceed the limits in the following table.

FREQUENCY (MHz)	Class B (dBuV)		Standard
	Quasi-peak	Average	
0.15 -0.5	66 - 56 *	56 - 46 *	FCC
0.50 -5.0	56.00	46.00	FCC
5.0 -30.0	60.00	50.00	FCC

Note:

(1) The tighter limit applies at the band edges.
(2) The limit of " * " marked band means the limitation decreases linearly with the logarithm of the frequency in the range.

The following table is the setting of the receiver

Receiver Parameters	**Setting**
Attenuation	10 dB
Start Frequency	0.15 MHz
Stop Frequency	30 MHz
IF Bandwidth	9 kHz

3.2 TEST PROCEDURE

a. The EUT is 0.8 m from the horizontal ground plane and 0.4 m from the vertical ground plane with EUT being connected to the power mains through a line impedance stabilization network (LISN). All other support equipments are powered from additional LISN(s). The LISN provides 50 Ohm/ 50uH of coupling impedance for the measuring instrument.

b. Interconnecting cables that hang closer than 40 cm to the ground plane shall be folded back and forth in the center forming a bundle 30 to 40 cm long.

c. I/O cables that are not connected to a peripheral shall be bundled in the center. The end of the cable may be terminated, if required, using the correct terminating impedance. The overall length shall not exceed 1 m.

d. LISN at least 80 cm from nearest part of EUT chassis.

e. For the actual test configuration, please refer to the related Item –EUT Test Photos.

3.3 TEST SETUP

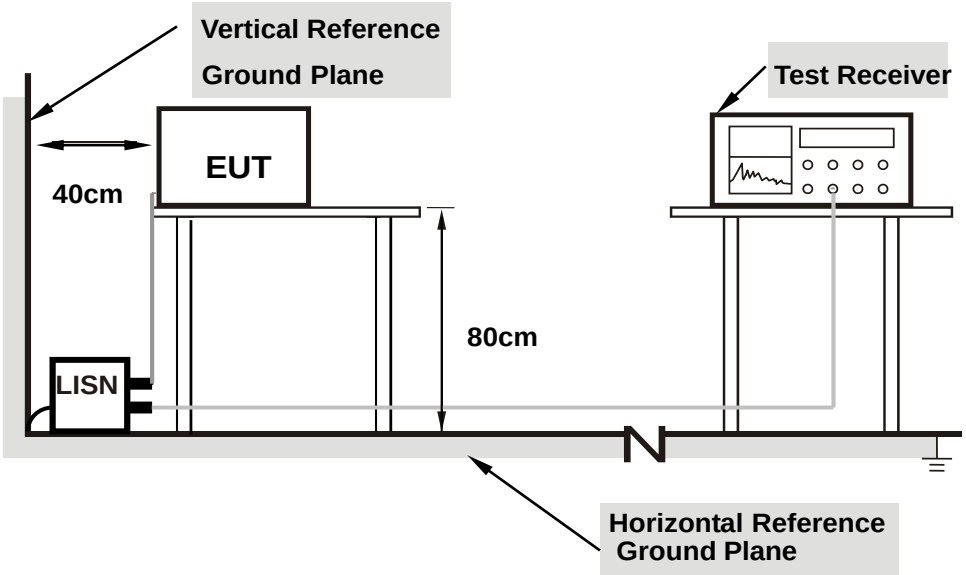

Note: 1.Support units were connected to second LISN.

2.Both of LISNs (AMN) are 80 cm from EUT and at least 80 cm from other units and other metal planes support.

3.4 EUT OPERATING CONDITIONS

The EUT was configured for testing in a typical fashion (as a customer would normally use it). The EUT has been programmed to continuously transmit during test. This operating condition was tested and used to collect the included data.

3.5 TEST RESULTS

The product only supports DC power supply, test is not applicable.

4. RADIATED EMISSION MEASUREMENT

4.1 RADIATED EMISSION LIMITS

(a) The field strength of any emissions within the band 13.553-13.567 MHz shall not exceed 15,848 microvolts/meter at 30 meters.
(b) Within the bands 13.410-13.553 MHz and 13.567-13.710 MHz, the field strength of any emissions shall not exceed 334 microvolts/meter at 30 meters.
(c) Within the bands 13.110-13.410 MHz and 13.710-14.010 MHz the field strength of any emissions shall not exceed 106 microvolts/meter at 30 meters.
(d) The field strength of any emissions appearing outside of the 13.110-14.010 MHz band shall not exceed the general radiated emission limits in §15.209.
RSS-Gen, and RSS 210 Issue 10 (B.6)
(Radiated Emission <30MHz (9KHz-30MHz, H-field)
According to FCC section 15.225, for <30MHz, Radiated emissions were measured according to ANSIC63.4. The EUT was set to transmit at the highest output power. The EUT was set 30 meter away from the measuring antenna. The loop antenna was positioned 1 meter above the ground from the center of the loop. The measuring bandwidth was set to 10KHz. (Note: During testing the receive antenna was rotated about its axis to maximize the emission from the EUT)
There was no detected Restricted bands and Radiated suprious emission below 30MHz. The 30m limit was converted to 3m Limit using square factor(x) as it was found by measurements as follows;
3 m Limit(dBuV/m) = 20log(X)+40log(30/3)= 20log(15,848)+40log(30/3) =124dBuV
3 m Limit(dBuV/m) = 20log(X)+40log(30/3)= 20log(334)+40log(30/3) =90.47dBuV
3 m Limit(dBuV/m) = 20log(X)+40log(30/3)= 20log(106)+40log(30/3) =80.506dBuV
3 m Limit(dBuV/m) = 20log(X)+40log(30/3)= 20log(30)+40log(30/3) =69.54dBuV
Except as provided elsewhere in this Subpart, the emissions from an intentional radiator shall not exceed the field strength levels specified in the following table:

LIMITS OF RADIATED EMISSION MEASUREMENT (Frequency Range 9kHz-1000MHz)

Frequency range (KHz)	Frequency (KHz)	Field Strength@300m		Field Strength@3m
		μV/m	dBμV/m	dBμV/m
9 ~ 490	9	266.67	48.52	128.52
	150	16.00	24.08	104.08
	490	4.90	13.80	93.80

Frequency range (KHz)	Frequency (KHz)	Field Strength@30m		Field Strength@3m
		μV/m	dBμV/m	dBμV/m
490 ~ 1705	490	48.98	33.80	73.80
	1705	14.08	22.97	62.97

Frequency range (KHz)	Frequency (KHz)	Field Strength@30m		Field Strength@3m
		μV/m	dBμV/m	dBμV/m
1705 ~ 30000	1705	30.00	29.54	69.54
	30000	30.00	29.54	69.54

Frequency range (MHz)	Field Strength@30m		Field Strength@3m
	μV/m	dBμV/m	dBμV/m
13.110 ~ 13.410	106	40.5	80.5
13.410 ~ 13.553	334	50.5	90.5
13.553 ~13.567	15.848	84	124.0
13.567 ~ 13.710	334	50.5	90.5
13.710 ~14.010	106	40.5	80.5

NOTE:

a) Field Strength (dBμV/m) = 20*log[Field Strength (μV/m)].

b) In the emission tables above, the tighter limit applies at the Band edge.

Radiated Emission >30MHz (30MHz-1GHz, E-field)

According to FCC section 15.205, the field strength of radiated emissions from intentiona radiators at a distance of 3 meters shall not exceed the following values:

Frequencies (MHz)	Field Strength (micorvolts/meter)	Measurement Distance (meters)
30~88	100	3
88~216	150	3
216~960	200	3
Above 960	500	3

Receiver Parameter	Setting
Attenuation	Auto
Start ~ Stop Frequency	9kHz~90kHz / RB 200Hz for PK & AV
Start ~ Stop Frequency	90kHz~110kHz / RB 200Hz for QP
Start ~ Stop Frequency	110kHz~490kHz / RB 200Hz for PK & AV
Start ~ Stop Frequency	490kHz~30MHz / RB 9kHz for QP
Start ~ Stop Frequency	30MHz~1000MHz / RB 120kHz for QP

4.2 TEST PROCEDURE

a. The test is performed in a 3m Semi-Anechoic Chamber; the antenna factor, cable loss and so on of the site (factors) is calculated to correct the reading. The EUT is placed on a 0.8m high insulating Turn Table, and keeps 3m away from the Test Antenna, which is mounted on a variable-height antenna master tower. For the test Antenna
b. In the frequency range of 9KHz to 30MHz, magnetic field is measured with Loop Test Antenna. The Test Antenna is positioned with its plane vertical at 1m distance from the EUT. The center of the Loop Test Antenna is 1m above the ground. During the measurement the Loop Test Antenna rotates about its vertical axis for maximum response at each azimuth about the EUT.
c. In the frequency range above 30MHz, Bi-Log Test Antenna (30MHz to 1GHz) used. Test Antenna is 3m away from the EUT. Test Antenna height is varied from 1m to 4m above the ground to determine the maximum value of the field strength. The emission levels at both horizontal and vertical polarizations should be tested.
f. The initial step in collecting conducted emission data is a spectrum analyzer peak detector mode pre-scanning the measurement frequency range. Significant peaks are then marked and then Quasi Peak detector mode re-measured.
g. If the Peak Mode measured value compliance with and lower than Quasi Peak Mode Limit, the EUT shall be deemed to meet QP Limits and then no additional QP Mode measurement performed.
h. For the actual test configuration, please refer to the related Item –EUT Test Photos.

NOTE:

Both horizontal and vertical antenna polarities were tested and performed pretest to three orthogonal axis. The worst case emissions were reported

4.3 TEST SETUP

(A) Radiated Emission Test-Up Frequency Below 30MHz

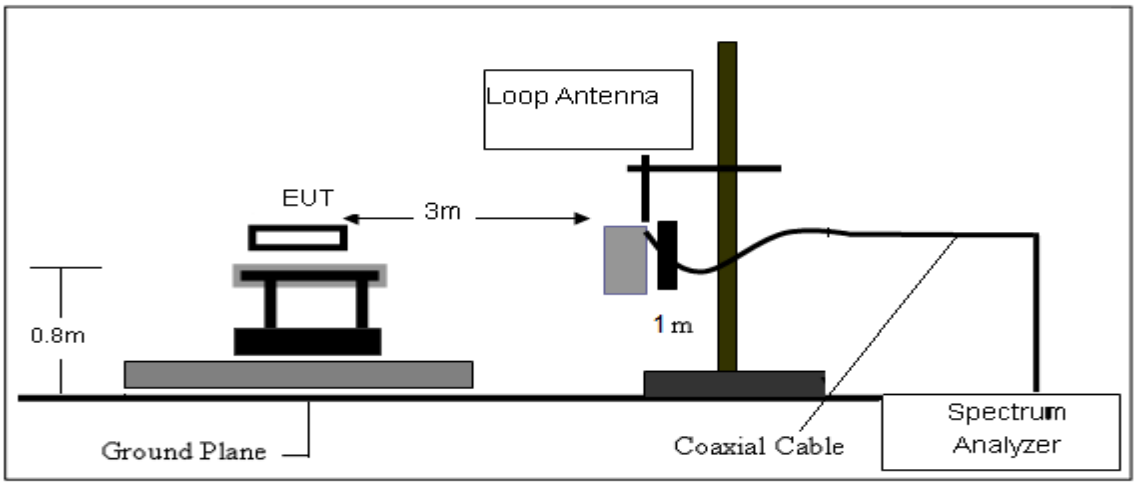

(B) Radiated Emission Test-Up Frequency 30MHz~1GHz

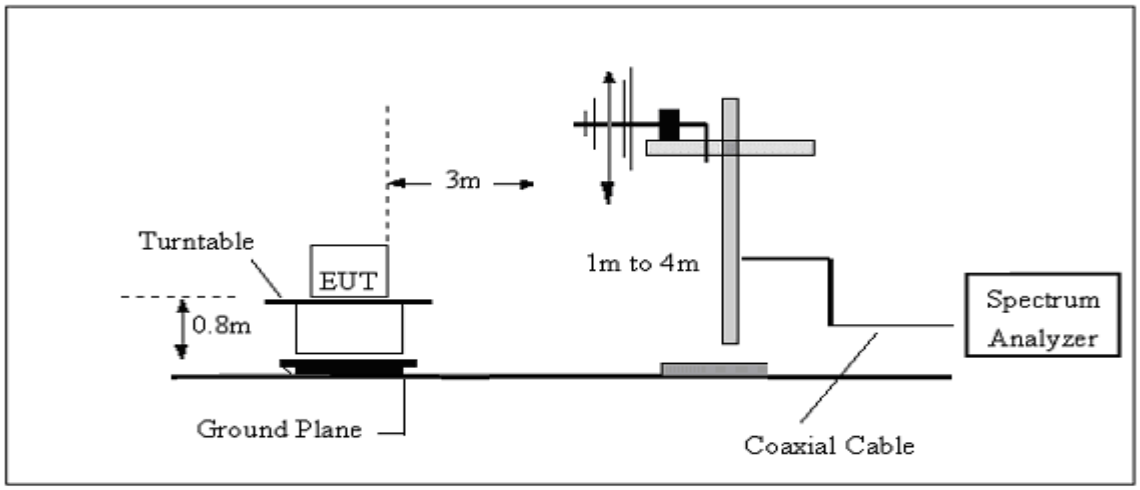

4.4 EUT OPERATING CONDITIONS

Please refer to section 3.4 of this report.

4.5 FIELD STRENGTH CALCULATION

The field strength is calculated by adding the Antenna Factor and Cable Factor and subtracting the Amplifier Gain and Duty Cycle Correction Factor (if any) from the measured reading. The basic equation with a sample calculation is as follows:

FS = RA + AF + CL - AG

Where

FS = Field Strength

CL = Cable Attenuation Factor (Cable Loss)

RA = Reading Amplitude

AG = Amplifier Gain

AF = Antenna Factor

For example

Frequency	FS	RA	AF	CL	AG	Factor
(MHz)	(dBμV/m)	(dBμV/m)	(dB)	(dB)	(dB)	(dB)
300	40	58.1	12.2	1.6	31.9	-18.1

Factor=AF+CL-AG

4.6 TEST RESULTS

(Radiated Emission<30MHz (9KHz-30MHz, H-field))

Project: LGT24C088	Test Engineer: Xiangdong Ma
EUT: NFC Reader	Temperature: 22℃
M/N: CM04-A02	Humidity: 45%RH
Test Voltage: DC 12V	Test Data: 2024-03-22
Test Mode: NFC TX	
Note:	

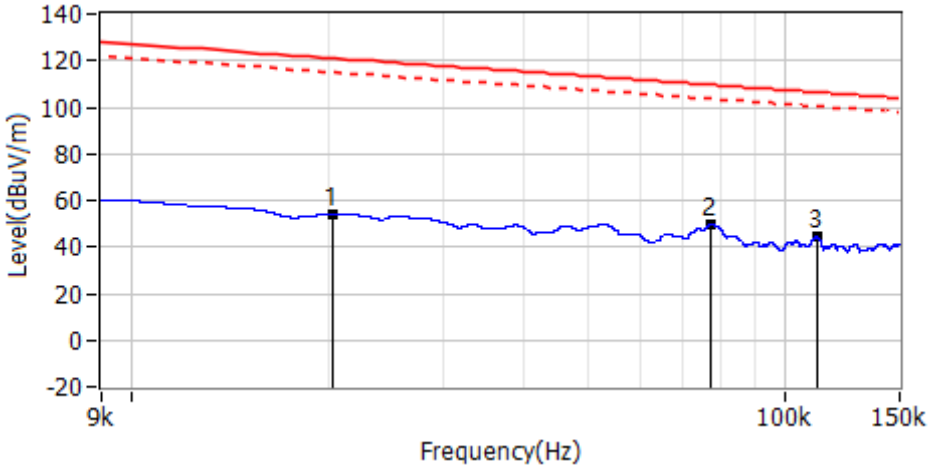

No.	Frequency	Reading dBuV	Factor dB/m	Level dBuV/m	Limit dBuV/m	Margin dB	Detector
1*	20.3152kHz	39.48	14.47	53.95	121.03	-67.09	PK
2*	77.2088kHz	37.62	12.00	49.62	109.61	-59.99	PK
3*	111.8419kHz	32.38	12.00	44.38	106.44	-62.06	PK

Project: LGT24C088	Test Engineer: Xiangdong Ma
EUT: NFC Reader	Temperature: 22℃
M/N: CM04-A02	Humidity: 45%RH
Test Voltage: DC 12V	Test Data: 2024-03-22
Test Mode: NFC TX	
Note:	

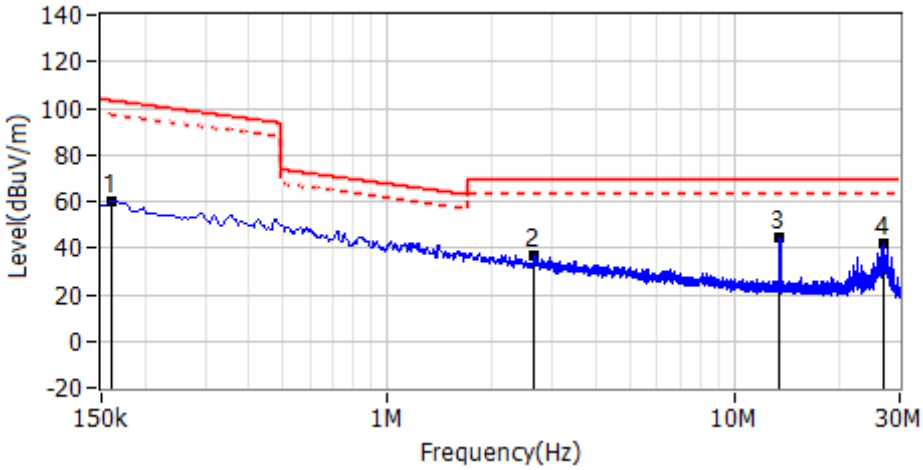

No.	Frequency	Reading dBuV	Factor dB/m	Level dBuV/m	Limit dBuV/m	Margin dB	Detector
1*	161.1938kHz	48.22	12.00	60.22	103.31	-43.09	PK
2*	2.6611MHz	25.04	12.00	37.04	69.54	-32.50	PK
3*	13.5564MHz	33.09	11.00	44.09	69.54	-25.45	PK
4*	27.0971MHz	32.34	9.48	41.82	69.54	-27.72	PK

Project: LGT24C088	Test Engineer: Xiangdong Ma
EUT: NFC Reader	Temperature: 22℃
M/N: CM04-A02	Humidity: 45%RH
Test Voltage: DC 12V	Test Data: 2024-03-22
Test Mode: NFC TX	
Note:	

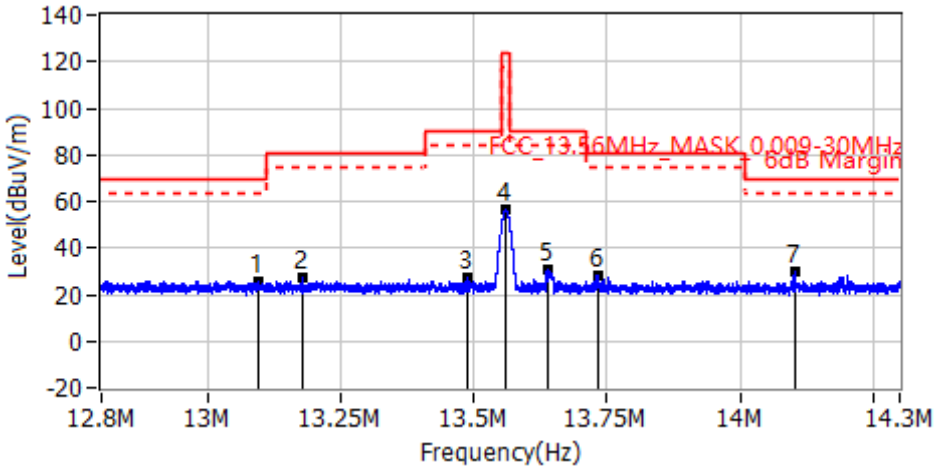

No.	Frequency	Reading dBuV	Factor dB/m	Level dBuV/m	Limit dBuV/m	Margin dB	Detector
1*	13.0931MHz	14.93	11.00	25.93	69.54	-43.61	PK
2*	13.1782MHz	16.07	11.00	27.07	80.50	-53.43	PK
3*	13.4870MHz	16.47	11.00	27.47	90.50	-63.03	PK
4*	13.5603MHz	45.17	11.00	56.17	124.00	-67.83	PK
5*	13.6372MHz	19.34	11.00	30.34	90.50	-60.16	PK
6*	13.7317MHz	17.14	11.00	28.14	80.50	-52.36	PK
7*	14.1033MHz	18.55	11.00	29.55	69.54	-39.99	PK

Between 30-1000MHz

Project: LGT24C088	Test Engineer: Xiangdong Ma
EUT: NFC Reader	Temperature: 22℃
M/N: CM04-A02	Humidity: 45%RH
Test Voltage: DC 12V	Test Data: 2024-03-25
Test Mode: NFC	
Note:	

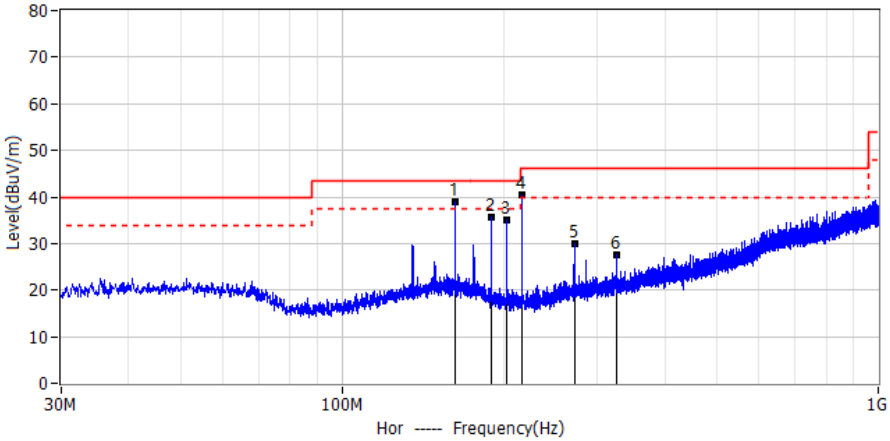

No.	Frequency MHz	Reading dBuV	Factor dB/m	Level dBuV/m	Limit dBuV/m	Margin dB	Detector	Polar
1*	162.648	19.17	19.82	38.99	43.50	-4.51	PK	Hor
2*	189.808	18.07	17.70	35.77	43.50	-7.73	PK	Hor
3*	203.388	17.94	17.08	35.02	43.50	-8.48	PK	Hor
4*	216.968	23.38	16.93	40.31	46.00	-5.69	PK	Hor
5*	271.166	10.68	19.24	29.92	46.00	-16.08	PK	Hor
6*	325.486	6.81	20.71	27.52	46.00	-18.48	PK	Hor

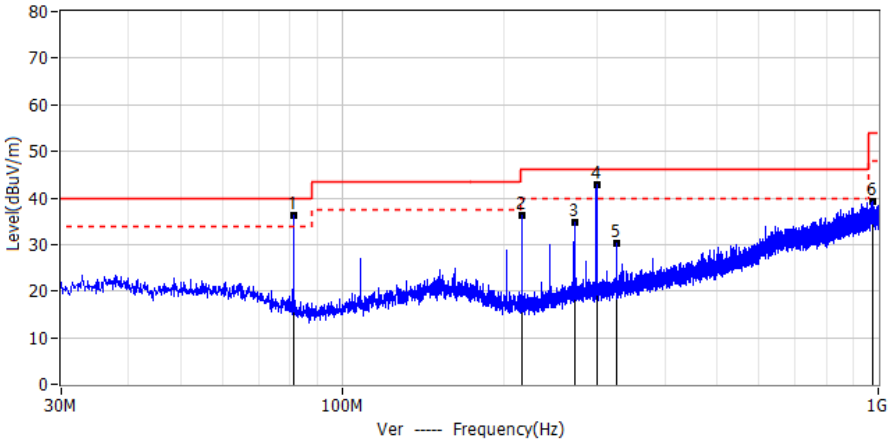

No.	Frequency MHz	Reading dBuV	Factor dB/m	Level dBuV/m	Limit dBuV/m	Margin dB	Detector	Polar
1*	81.289	21.13	15.18	36.31	40.00	-3.69	PK	Ver
2*	216.968	19.44	16.93	36.37	46.00	-9.63	PK	Ver
3*	271.166	15.61	19.24	34.85	46.00	-11.15	PK	Ver
4*	298.326	23.04	19.88	42.92	46.00	-3.08	PK	Ver
5*	325.365	9.63	20.71	30.34	46.00	-15.66	PK	Ver
6*	977.205	4.69	34.46	39.15	54.00	-14.85	PK	Ver

5. FREQUENCY TOLERANCE

5.1 LIMIT

According to FCC section 15.225& RSS 210 (B.6), the devices operating in the 13.553-13.567 MHz shall maintain the carrier frequency within 0.01% of the operating frequency over the temperature variation of -20°C to +50°C using an environmental chamber. The primary supply voltage is varied from 85% to 115% of the voltage normally at the input to the device or at the power supply terminals if cables are not normally supplied.

5.2 TEST PROCEDURE

According to FCC section 15.225(e),The frequency tolerance of the carrier signal shall be maintained within ±0.01% of the operating frequency over a temperature variation of −20 degrees to + 50 degrees C at normal supply voltage, and for a variation in the primary supply voltage from 85% to 115% of the rated supply voltage at a temperature of 20 degrees C. For battery operated equipment, the equipment tests shall be performed using a new battery.

5.3 TEST SETUP

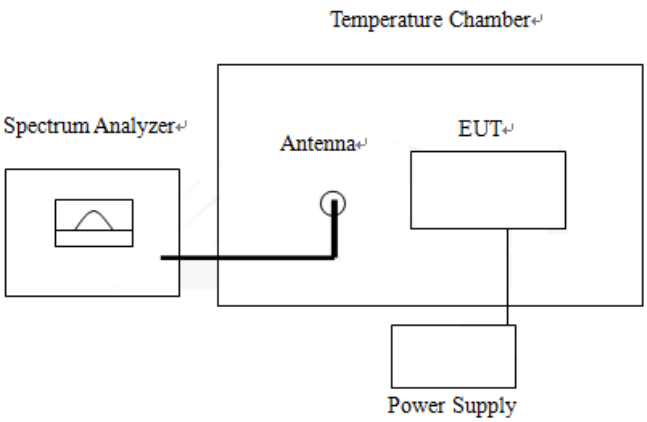

The EUT which is powered by the Battery, is coupled to the Spectrum Analyzer; the RF load attachec to the EUT antenna terminal is 50Ohm; the path loss as the factor is calibrated to correct the reading

5.4 EUT OPERATION CONDITIONS

Please refer to section 3.4 of this report.

5.5 TEST RESULTS

Temperature:	25 ℃	Relative Humidity:	50%
Test Voltage:	DC 12V	Test Mode:	TX Mode

13.56MHz

VOLTAGE(%)	Test Conditions		Frequency	Deviation	Limit	Verdict
	Power (VDC)	Temperature (°C)	(Hz)			
100	3.85	+20°C(Ref)	13560751	0.00554%	±0.01%	PASS
100		-20	13560752	0.00554%	±0.01%	
100		-10	13560753	0.00555%	±0.01%	
100		0	13560751	0.00554%	±0.01%	
100		10	13560754	0.00556%	±0.01%	
100		20	13560751	0.00554%	±0.01%	
100		25	13560753	0.00555%	±0.01%	
100		30	13560752	0.00554%	±0.01%	
100		40	13560753	0.00555%	±0.01%	
100		50	13560754	0.00556%	±0.01%	
Battery End Point	3.5	20	13560752	0.00555%	±0.01%	
115	4.35	20	13560750	0.00553%	±0.01%	

6. 20DB BANDWIDTH

6.1 LIMIT

According to FCC section 15.215 & RSS-Gen 6.7, the 20dB bandwidth should be contained within the frequency band designated in the rule section under which the EUT is operated, it was measured with a spectrum analyzer connected the EUT while the EUT is operating in transmission mode.

6.2 TEST PROCEDURE

Intentional radiators operating under the alternative provisions to the general emission limits, as contained in §13.553-13.567 MHz and in subpart E of this part, must be designed to ensure that the 20 dB bandwidth of the emission, or whatever bandwidth may otherwise be specified in the specific rule section under which the equipment operates, is contained within the frequency band designated in the rule section under which the equipment is operated. In the case of intentional radiators operating under the provisions of subpart E, the emission bandwidth may span across multiple contiguous frequency bands identified in that subpart. The requirement to contain the designated bandwidth of the emission within the specified frequency band includes the effects from frequency sweeping, frequency hopping and other modulation techniques that may be employed as well as the frequency stability of the transmitter over expected variations in temperature and supply voltage. If a frequency stability is not specified in the regulations, it is recommended that the fundamental emission be kept within at least the central 80% of the permitted band in order to minimize the possibility of out-of-band operation.

1. Set RBW = 1 kHz.
2. Set the video Mobile Phonewidth (VBW) ≥ 3 RBW.
3. Detector = Peak.
4. Trace mode = max hold.
5. Sweep = auto couple.
6. Allow the trace to stabilize.
7.Measure the maximum width of the emission that is constrained by the frequencies associated wi th the two outermost amplitude points (upper and lower frequencies) that are attenuated by 6 dB re lative to the maximum level measured in the fundamental emission.

6.3 TEST SETUP

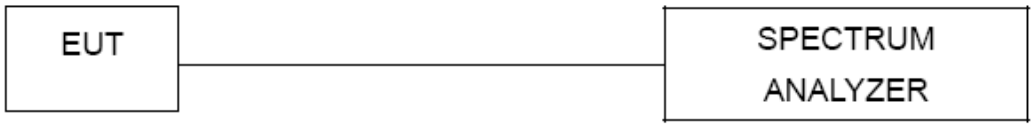

6.4 EUT OPERATION CONDITIONS

Please refer to section 3.4 of this report.

6.5 TEST RESULTS

Temperature:	25 ℃	Relative Humidity:	50%
Test Voltage:	DC 12V	Test Mode:	TX Mode

13.56MHz

Centre Frequency	Measurement		
	20dB Bandwidth KHz	99% Bandwidth KHz	Frequency Range MHz
13.56MHz	2.712	2.351	13.553-13.567

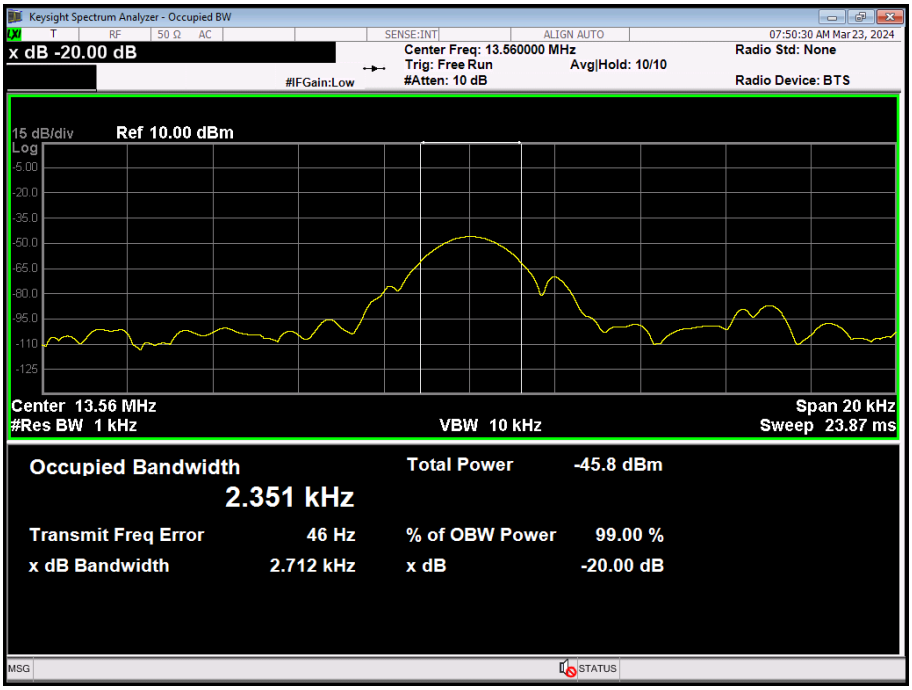

7. ANTENNA REQUIREMENT

7.1 STANDARD REQUIREMENT

Part 15.203 & RSS-Gen 6.8 requirement: For intentional device, according to 15.203: an intentional radiator shall be designed to ensure that no antenna other than that furnished by the responsible party shall be used with the device.

7.2 EUT ANTENNA

The EUT antenna is coil Antenna. It comply with the standard requirement.

APPENDIX 1 - PHOTOS OF TEST SETUP

Note: See test photos in setup photo document for the actual connections between Product and support equipment.

※※※※※END OF THE REPORT※※※※※