# Antenna Pattern Measurement
# Test Report for Proteus-III & Thyone-I
# 26 11 01 102 xxxx

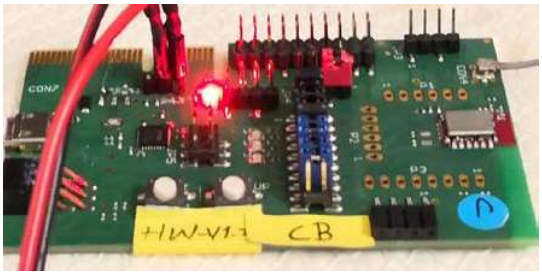


Report Reference: MDE_WUERTH_1901_OTA01
Date: 10.10.2019

**Test Laboratory:**
7layers GmbH
Borsigstrasse 11
40880 Ratingen
Germany

DAkkS
Deutsche
Akkreditierungsstelle
D-PL-12140-01-01

Note:
The following test results relate only to the devices specified in this document. This report shall not be reproduced in parts without the written approval of the test laboratory.

# Content:


**1 TEST LAB DECLARATION 3**

**2 SIGNATURES 3**

**3 PROJECT AND RESULT SUMMARY 4**

**4 BRIEF DESCRIPTION OF SETTINGS AND TEST METHOD 5**

4.1 References and Standards Used 5

4.2 Test Procedure TRP 5

4.3 Definitions 6

4.4 Measurement uncertainties 7

**5 DETAILED RADIATED TEST RESULTS AND PATTERN 8**

5.1 Equipment List 8

5.2 Radiation Pattern TRP Bluetooth LE 2402 MHz 9

5.3 Radiation Pattern TRP Bluetooth LE 2440 MHz 11

5.4 Radiation Pattern TRP Bluetooth LE 2480 MHz 13

# 1 Test Lab Declaration

**All test results stated relate only to the device tested.**

**The test report must usually be reproduced in full. Reproduction of an excerpt is hereby granted, but only when:**

- **in the resulting document it's status (being an excerpt) is clearly stated and**
- **in minimum chapter 3 is included completely.**

# 2 SIGNATURES

| | | | |
|---|---|---|---|
| Responsible for Accreditation Scope: | Robert Machulec | Responsible for Test Report: | Dieter Sütthoff |

# 3 Project and Result Summary

| | | | |
|---|---|---|---|
| DUT | Proteus-III & Thyone-I | OUT Code | Radiated Sample: DE1387000aa01<br>Conducted Sample: DE1387000af01 |
| Test lab | 7layers GmbH<br>Borsigstr. 11<br>40880 Ratingen<br>Germany | Set up | free space |
| | | Test start | 19.09.2019 |
| Customer | Würth Elektronik eiSos GmbH & Co. KG<br>Max-Eyth-Straße 1<br>74638 Waldenburg | Report date | 10.10.2019 |
| | | Report by | Dieter Sütthoff |
| | | Approved by | Robert Machulec |

| Bluetooth LE | | | |
|---|---|---|---|
| **RMS Detector Modulated** | **2402 MHz** | **2440 MHz** | **2480 MHz** |
| **Antenna Port Input Power (EUT Conducted Sample)** | **6.2** | **5.7** | **5.3** |
| Tot. Rad. Pwr. (dBm) | 0.3 | 0.8 | -1.3 |
| Peak EIRP (dBm) | **3.6** | **4.1** | **2.5** |
| Directivity (dBi) | 3.3 | 3.3 | 3.7 |
| Efficiency (dB) | -5.9 | -4.9 | -6.6 |
| Efficiency (%) | 26 | 33 | 22 |
| **Gain (dBi)** | **-2.6** | **-1.6** | **-2.8** |

Tab. 1: Test result summary Bluetooth

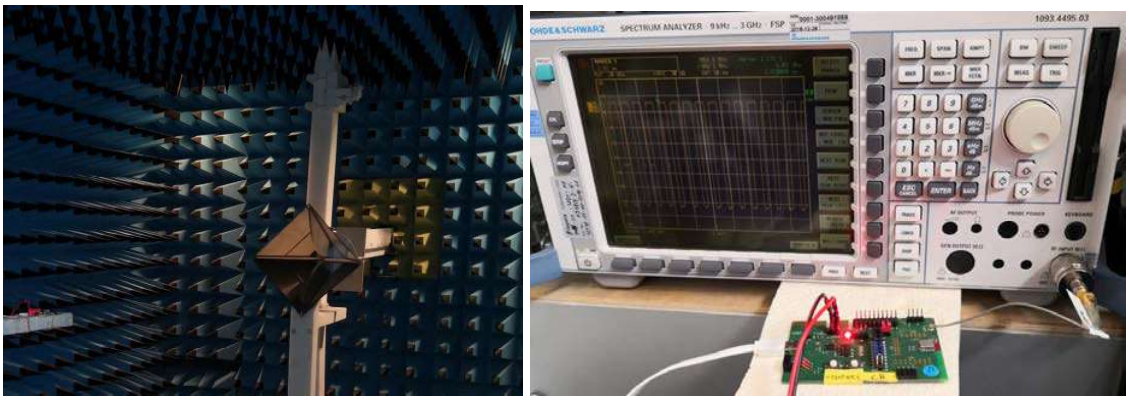

Fig. 1: Photo of DUT (left picture: radiated set up, right picture: conducted test set up).

# 4 Brief Description of Settings and Test Method

## 4.1 References and Standards Used

[1] CTIA: "Test Plan for Wireless Device Over the Air Performance", Revision Number 3.8.2, 04/2019.

[2] 7 layers document: "7 layers Germany OTA Measurement Uncertainties", Version March 2019.

## 4.2 Test Procedure TRP

The method of measurement for radiated RF power based on the principals of the test standard CTIA: "Test Plan for Mobile Station Over the Air Performance" [2].

***In general, the following approach is applied for TRP measurements:***

- For TRP measurement put OUT in a mode where it is transmitting periodical RF energy.
- Rotate the EUT in all room directions with an angle grid of 15°.
- Gather power data for both, vertical and horizontal polarization.
- Calculate total radiated power by integrating over the whole sphere as outlined in [2].

The test setup was placed at the turning device inside a fully anechoic chamber. The object under test (OUT) was set to transmit permanently signal on specific frequencies

The total radiated power (TRP) of the test setup was measured in all angle direction (3D) using a step width of <= 15° and using two measurement antenna polarizations (vertical and horizontal).

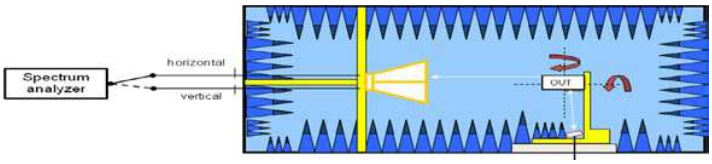


Fig. 1: Block diagram for TRP measurement

### 4.3 Definitions

| | |
|---|---|
| 3GPP | 3rd Generation Partnership Project |
| BER | Bit error rate or bit error ratio |
| BS | Base station |
| CTIA | Cellular Telecommunications & Internet Association |
| DUT | Device under test |
| FS | Free space |
| TP | Talk position (phone is situated at SAM = human head phantom) |
| TRP | Total Radiated Power |
| EIRP | Effective Isotropic Radiated Power |
| TRS | Total Radiated Sensitivity (same as TIS in CTIA), loss of link level |
| EIRS | Effective Isotropic Radiated Sensitivity |

## 4.4 Measurement uncertainties

| Maxim Values | OTA lab at 7layers Germany [2] |
|---|---|
| TRP Free space | ±1.7 dB |

**Standard specific table with the measurement uncertainties of the used parameters**

The measurement uncertainties for all parameters are calculated with an expansion factor (coverage factor) k = 1.96. This means, that the true value is in the corresponding interval with a probability of 95 %.

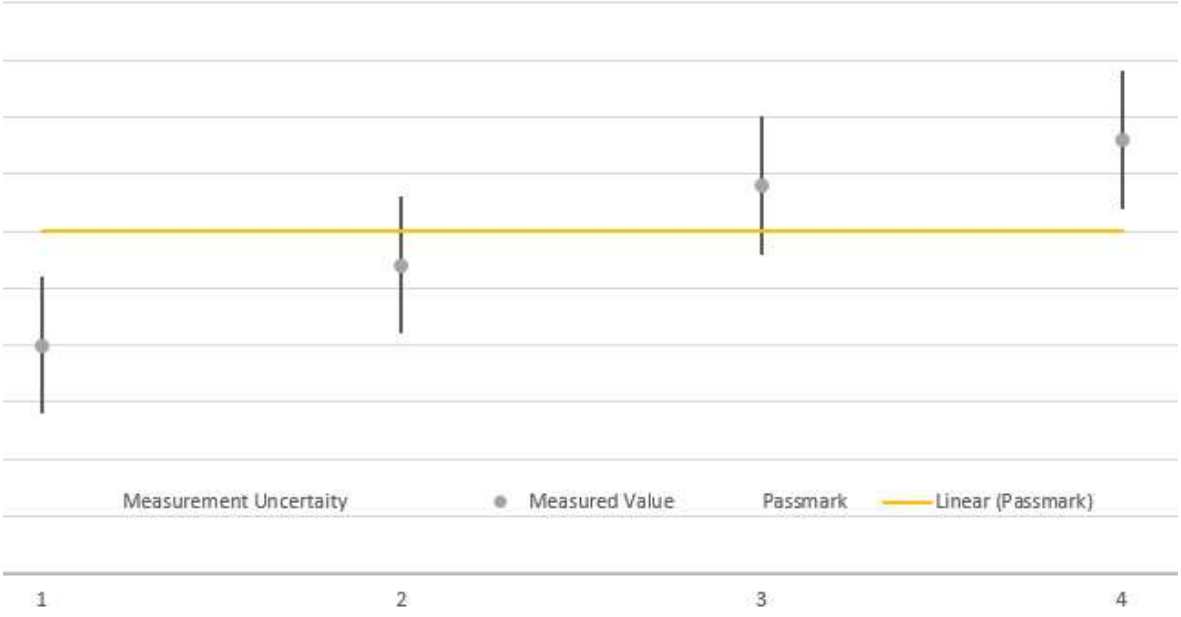


The verdicts in this test report are given according the above diagram:

| Case | Measured Value | Uncertainty Range | Verdict |
|---|---|---|---|
| 1 | below pass mark | below pass mark | Passed |
| 2 | below pass mark | within pass mark | Passed |
| 3 | above pass mark | within pass mark | Failed |
| 4 | above pass mark | above pass mark | Failed |

That means, the laboratory applies, as decision rule (see ISO/IEC 17025:2017), the so called shared risk principle.

# 5 Detailed Radiated Test Results and Pattern

## 5.1 Equipment List

**For TRP measurements:**

| | | |
|---|---|---|
| Antenna: | Dual polarized horn ETS3164-03 by ETS | SN 00052619 |
| Receiver: | FSP3 spectrum analyzer by R&S for 2.4 GHz | SN 838164/004 |

**Orientation of EUT compared to a standard device**

For orientation of the EUT in the result pictures below the following photos illustrate the used orientation compared to a standard device:

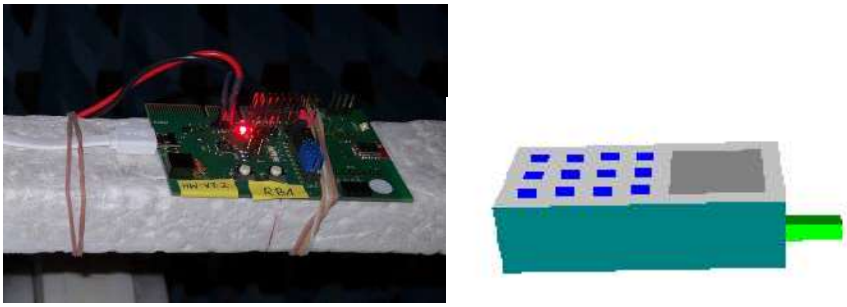

Fig. 2: Photo orientation of DUT compared to a phone.

## 5.2 Radiation Pattern TRP Bluetooth LE 2402 MHz

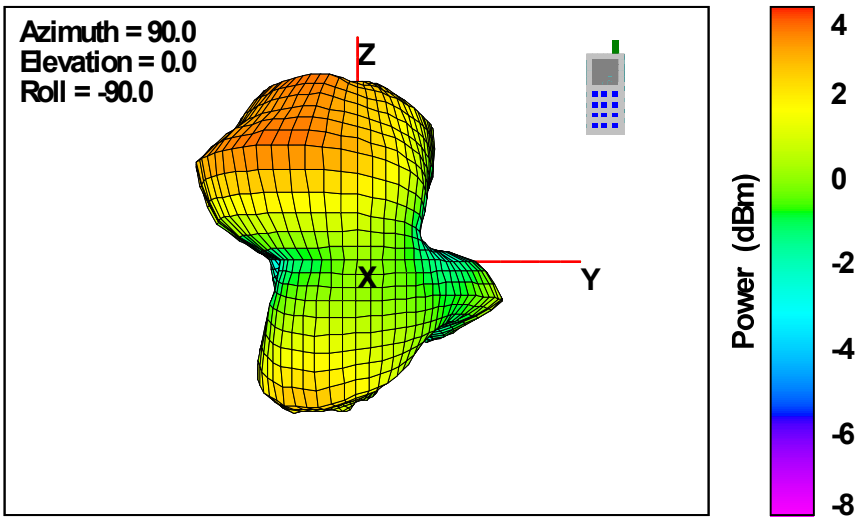


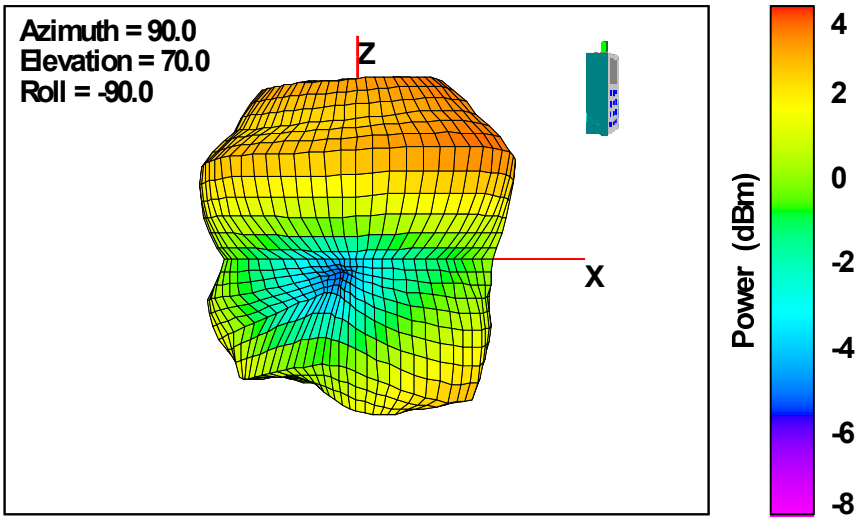

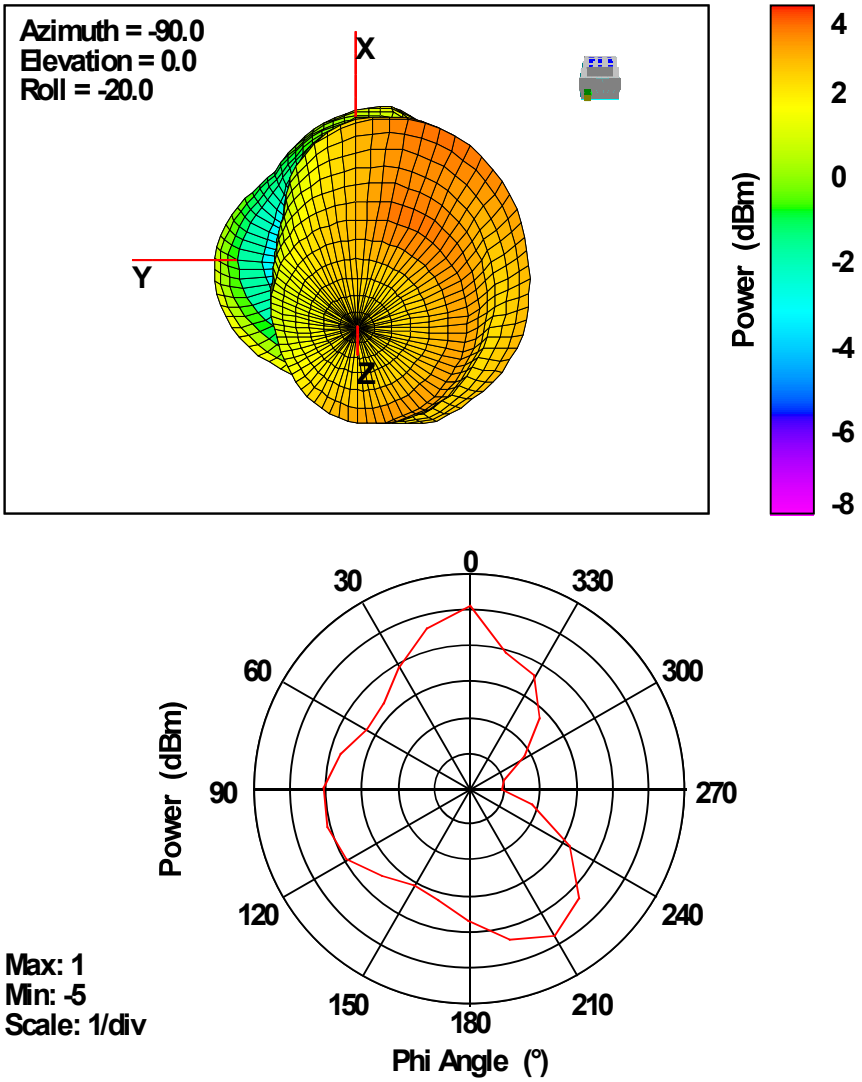


Theta = 90°

Fig. 3: 2402 MHz 3D Radiated pattern orientation of DUT compared to a phone.

## 5.3 Radiation Pattern TRP Bluetooth LE 2440 MHz

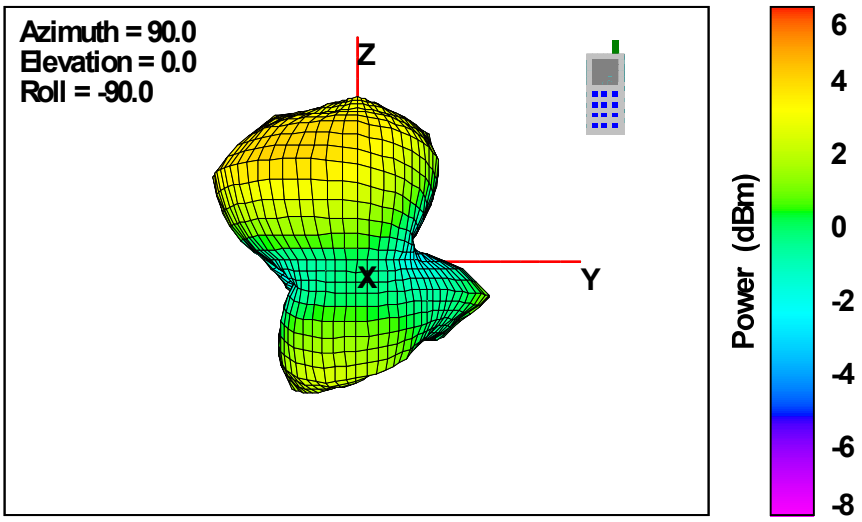


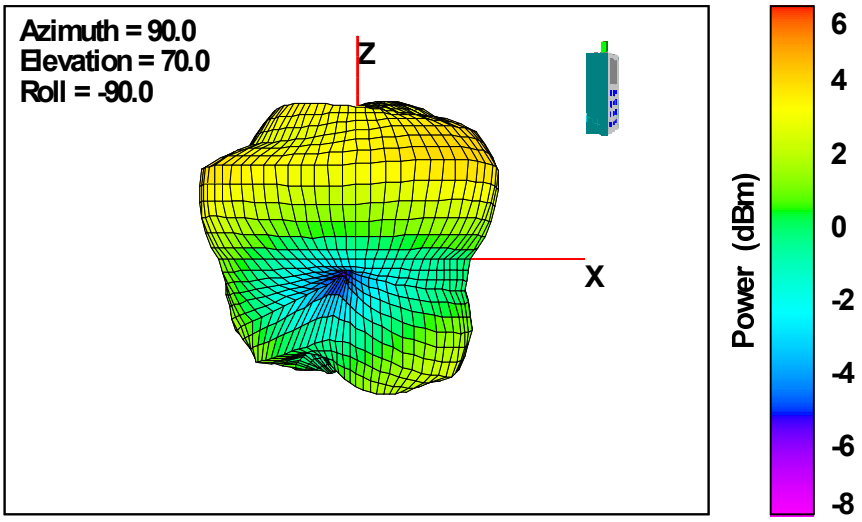

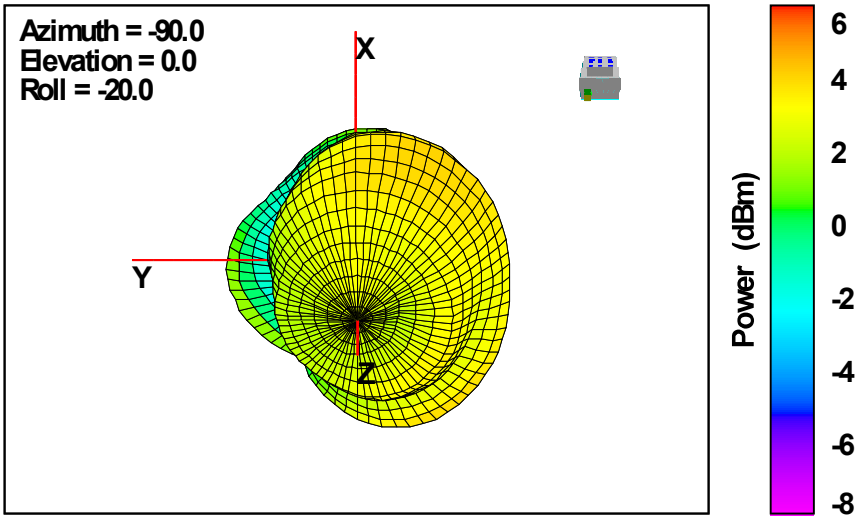


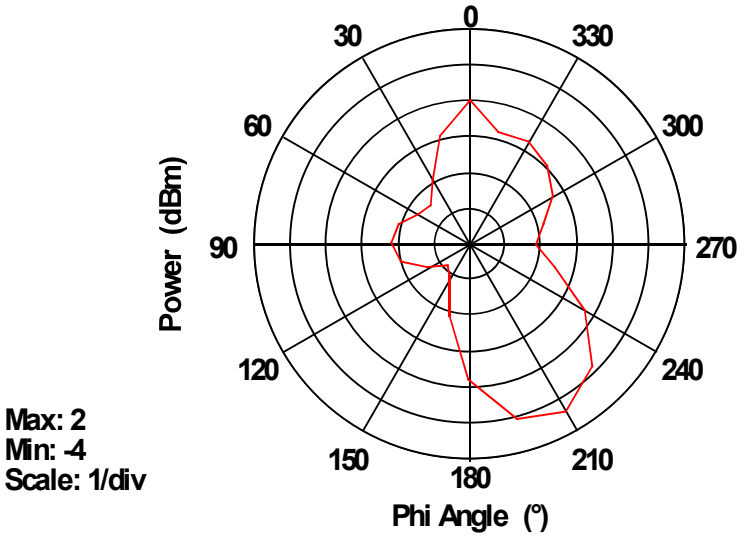


Theta = 90°

Fig. 4: 2440 MHz 3D Radiated pattern orientation of DUT compared to a phone.

## 5.4 Radiation Pattern TRP Bluetooth LE 2480 MHz

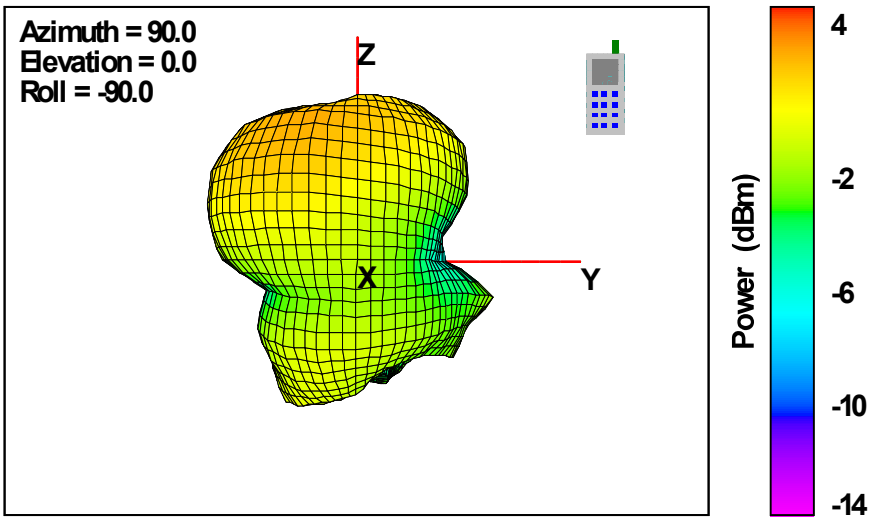


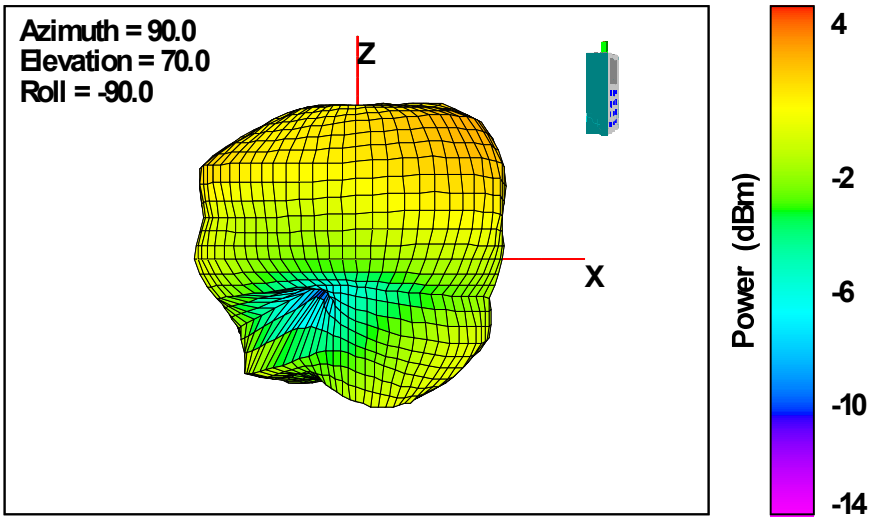

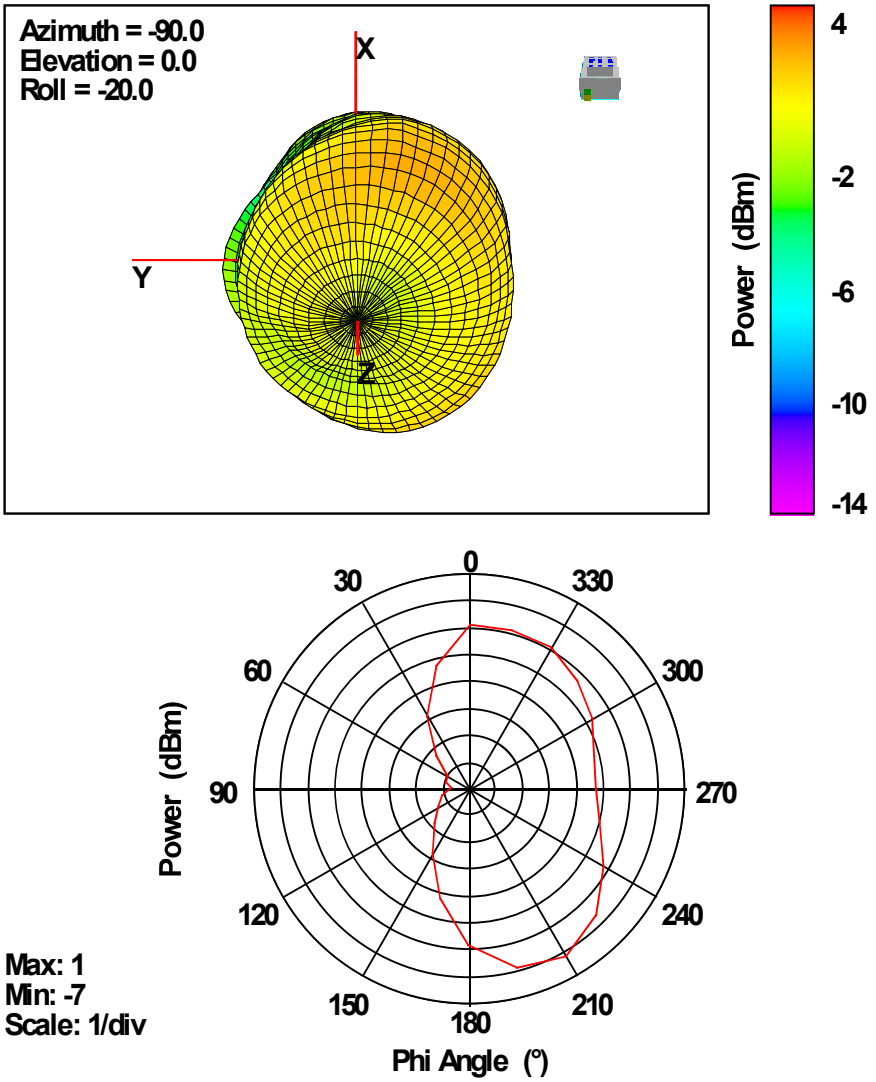


Theta = 90°

Fig. 5: 2480 MHz 3D Radiated pattern orientation of DUT compared to a phone.