air avionics

AIR COM

Installation Manual

VHF Aircraft Radio

Document: MAN0030A0002
Version: 1.4
Date: 2021/07/20

Phone: +49 (0) 6224 82 83 87 0 · Fax: +49 (0) 6224 82 83 87 7
Internet: https://www.air-avionics.com · Mail: support@air-avionics.com

Important

Please read this manual carefully before installing the device.

Observe limitations and safety instructions.

This manual is an essential component of the device and must be kept in a safe place.

Document-ID / Revision-History

This manual covers the following product types:

AC-1 “AIR COM”

Revision History

Rev.	*Date*	*Status*	*Author*	*Changes*	*Approved*
1.0	2020/03/31	Release	M. Förderer	Initial release	C. Körner
1.1	2021/02/03	Release	C. Körner	Added ETSO approval number	J. Garrecht
1.2	2021/03/22	Release	M. Förderer	Added menu diagram and additional configuration infos	C. Körner
1.3	2021/04/28	Release	M. Förderer	Added additional remarks and information	C. Körner
1.4	2021/07/20	Release	M. Förderer	Minor editorial changes, info about mounting, added a troubleshooting section	–

Product Support

If you have questions, our product support team will be happy to help you. Contact us via support@air-avionics.com or by phone. Please find details on hotlines and availablility online at http://www.air-avionics.com

Contents

General Description · *1*

Introduction · *1*
Equipment Description · *1*
System Capabilities · *2*
Technical Specifications · *2*
Regulatory Compliance · *4*
Limitations · *4*
Liability · *4*
Unpacking and Inspecting Equipment · *5*
Installation Materials · *5*

System Interconnects · *7*

D-SUB Power/Data/Signal Connectors · *7*
Data Interfaces · *11*
Power Supply · *13*
Discrete Inputs · *15*

Workmanship · *18*

Workmanship · *18*
Standards · *18*

Installation Overview · *19*

Control Device Compatibility Considerations · *19*
Antenna Considerations · *19*
Cabling and Wiring Considerations · *20*
AC-1 Mounting Considerations · *21*
Air Circulation and Cooling · *22*
Compass Safe Distance · *23*

Installation Procedures · *24*

General Handling Recommendations · *24*
Wiring Harness Assembly · *24*
Equipment Mounting · *25*

Interconnect Installation · *28*
Post Installation Configuration, Checkout, and Documentation · *28*

Post Installation Checkout · *29*

Wiring Checks · *29*
Connector Engagement Checks · *29*

System Configuration · *30*

General · *30*
Audio Configuration 1 and Audio Configuration 2 · *30*
Intercom · *31*
Discrete Inputs · *34*
COM Sidetone · *36*

Ground Checks · *37*

Interface Checkout · *37*
Version / Revision Check · *37*
VHF COM Ground Checks · *38*
Software Loading · *38*

Configuration and Checkout Documentation · *39*

Configuration Documentation · *39*
Checkout Documentation · *39*

Instructions for Continued Airworthiness · *40*

Troubleshooting · *41*

My AIR COM does not communicate with my ACD-57, I only see red crosses · *41*
Other stations only hear me very quietly · *41*

Assembly And Installation Drawings · *42*

Dimensional Drawings · *42*
Generic Wiring Diagram · *43*

Standard Installations · *44*

Two-seat aircraft · *45*
Four-seat aircraft · *47*
Single-seat glider with a dynamic microphone · *49*
Double-seat glider with dynamic microphones · *51*

Double-seat motorglider with dynamic microphones and headsets · *53*

Certification Documents · *55*

Continued Airworthiness · *55*

ETSO Certification Number · *55*

Environmental Qualification Form · *55*

Configuration Menu Diagram · *57*

Configuration Log · *59*

Audio Configuration · *59*

Intercom · *59*

Discrete Inputs · *59*

Checkout Log · *61*

Installation · *61*

Ground Checks · *61*

Interference Checks · *61*

Documentation · *61*

General Description 1

1.1 Introduction

This manual is intended to provide mechanical and electrical information for use in the planning and design of an installation of the AIR COM (AC-1) into an aircraft. This manual is not a substitute for an approved airframe-specific maintenance manual, installation design drawing, or complete installation data package. Attempting to install equipment by reference to this manual alone and without first planning or designing an installation specific to your aircraft may compromise your safety and is not recommended. The content of this manual assumes use by competent and qualified avionics engineering personnel and/or avionics installation specialists using standard aviation maintenance practices in accordance with relevant accepted practices. This manual is not intended for use by individuals who do not possess the competencies and abilities set forth above. Refer to Section "Limitations", for additional information and other considerations.

1.2 Equipment Description

Model	*Partnumber*	*Description*
AIR COM	AC-1	Aircraft radio system for remote installation

AC-1 is a small, lightweight VHF transceiver module for the VHF airband (118.000 to 137.000 MHz) with 8.33 kHz and 25 kHz channel spacing.

AC-1 does not feature any means for human maschine interaction. It always requires external control through a suitable control device, for example an *AIR Avionics* - AIR Control Display.

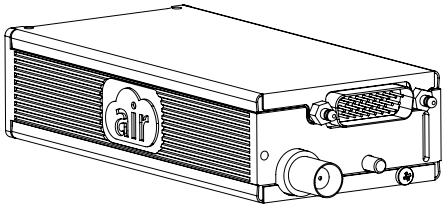

Figure 1.1.: AIR COM (AC-1) device.

1.3 System Capabilities

AC-1 is receiving and transmitting audio messages in the VHF airband. It features several microphone and audio inputs as well as speaker and audio outputs. Furthermore, AC-1 holds intercom functionality.

The unit is equipped with several interfaces to other avionics systems such as control devices installed in the aircraft. Discrete inputs are used to control functions such as Push To Talk (PTT) or intercom priority switching.

1.4 Technical Specifications

1.4.1 Housing

AC-1 has an all-metal housing with integrated grooves for heat dissipation. The housing construction provides excellent shielding against radiated electrical fields and a good mechanical resistance to withstand in rough environments.

1.4.2 Interconnects

AC-1 has two high density D-SUB connectors on the front and the back of the unit. Additionally it has a radio frequency connector (type BNC) on the back of the unit.

1.4.3 Physical Characteristics

Parameter	*Data*	*Unit*
Mechanical		
Dimensions	138.1 x 61.5 x 30.5	mm
Mounting	With mounting tray or attached to an AIR Control Display	-
Mass	0.24	kg
Power Supply		
Nominal supply voltage (nom.)	11.0...30.3	V DC
Abnormal supply voltage (nom.)	10.2...32.2	V DC
Emergency operation (transmit)	9	V DC
Emergency operation (receive)	8	V DC
Current transmit mode (nom.)	1.2 @ 13.75 V	A
Current transmit mode (nom.)	0.7 @ 28 V	A
Current receive mode (idle-nom.)	0.12 @ 13.75 V	A
Current receive mode (idle-nom.)	0.07 @ 28 V	A
Frequencies		
Frequency range (25 kHz mode)	118.000...136.975	MHz
Frequency range (8.33 kHz mode)	118.000...136.9916	MHz
Channel spacing	25 or 8.33	kHz
Number of channels	760 (25 kHz)	-
	2280 (8.33 kHz)	-
Receiver data		
Equipment classes of ED-23C	C, E	-
Sensitivity (nom.)	-102	dBm
Sensitivity (min.)	-93	dBm
Adjustable squelch level	-93 to -110	dBm
Audio output speaker	4.5	W minimum into a 4 Ohms load
Audio output headphone	110	mW minimum into a 150 Ohms load
Audio response	6	dB max. variation from 350 to 2500 Hz
Audio distortion (nom.)	3	%
Audio distortion (max.)	25	% at rated output power
Transmitter data		
Equipment classes of ED-23C	4, 6	-
Output power	6 (nom.), 4 (min.)	W into 50 Ohm @ 12 V DC
Output power (9 V to 10.2 V)	3.5	W
Microphone input (min.)	2	mVeff
Microphone input (max.)	700	mVeff, selectable MIC supply
Compressor range	10	dB, adjustable starting point and gain
Modulation capability	80	%
Frequency tolerance	2	ppm
Duty cycle	30/60	sec./sec.
Stuck PTT timeout	33	sec.
Emission designator	5K60A3E	-

1.5 Regulatory Compliance

1.5.1 ETSO Functions

- VHF Radio Communications Transceiver, operating within the Radio Frequency Range 117.975 to 137.000 Megahertz (ETSO-2C169a)
- Devices that prevent blocked channels used in two-way radio communications due to unintentional transmissions (ETSO-2C128)

1.5.2 Deviations

No deviations apply.

1.6 Limitations

1.6.1 Installation

Conditions and tests required for TSO approval of this article are minimum performance standards. It is the responsibility of those installing this article either on or within a specific type or class of aircraft to determine that the aircraft installation conditions are within the TSO standards. TSO articles must have separate approval for installation in an aircraft. The article may be installed only if performed under applicable airworthiness requirements.

Please be aware that not all functions supported by AC-1 may be supported by the connected control device. Carefully observe the limitations and functions of the control device in order to assess system limitations that apply to your aircraft.

1.6.2 Aircraft Radio

1. Use of the device is limited to class II aircraft (MRE, MTE and STE) and lower, which includes class I aircraft (SRE), both with MTOW of 6000 pounds or less as per definition of FAA AC23.1309-1E.
2. No limitations apply for other aircraft (i.e. CS-22, LSA, VLA etc.).
3. An aircraft radio station license may be required when operating this unit.

1.7 Liability

IN NO EVENT WILL AIR AVIONICS BE LIABLE FOR ANY INCIDENTAL, SPECIAL, INDIRECT OR CONSEQUENTIAL DAMAGES, WHETHER RESULTING FROM THE USE, MISUSE OR INABILITY TO USE THE PRODUCT OR FROM DEFECTS IN THE PRODUCT.

1.8 Unpacking and Inspecting Equipment

Before installation into an aircraft, the equipment should be visually inspected for shipping damages and completeness. If the unit is damaged, notify the carrier. Do not return the unit to AIR Avionics before the carrier has authorized a claim.

The following parts are normally included with an AC-1:

Quantity	*Part*	*Partnumber*	*Description*
1	AC-1 main unit	AC-1	AC-1 main unit
1	Data connector	FL15-26S7	D-SUB 26HD crimp connector (female)
1	Backshell	B567	D-SUB 26HD quicklock backshell
20	Contacts	FK22SL-02V	D-SUB HD crimp contacts
1	Pilot's Manual	MAN0030A0001	Pilot's Manual
1	Installation Manual	MAN0030A0002	This manual

> Should there be missing parts or spare parts required, please contact AIR Avionics or visit AIR Store at www.air-store.eu

1.9 Installation Materials

For obtaining installation material or tools, please visit *http://www.air-store.eu* or contact the AIR Avionics customer support.

1.9.1 Tools Required but not Supplied

Using crimp contacts for all connectors is recommended. The table below identifies crimp tools required to ensure consistent, reliable crimp contact connections for the D-Sub connectors.

Military Part Number	*Tool*
M22520/2-01	Hand crimping tool
M22520/2-06	Positioner (female)
M22520/2-09	Positioner (male)
M81969/14-01	Insertion and extraction tool

1.9.2 Parts Required but not Supplied

AC-1 is intended for use with standard aviation accessories. The following items are required for the installation, but not supplied.

- Wire (MIL-W-22759/16 or equivalent)
- Shielded wire (MIL-C-27500 or equivalent)
- Push/Pull (manually resettable) circuit breakers
- Tie wraps or lacing cord

1.9.3 Optional Accessories

You can get optional accessories from *http://www.air-store.eu*.

Part number	*Description*
B569	D-SUB26HD connection kit with receptacle, backshell, crimp terminals, wire
B427	1m cable to AIR Control Displays (ACD-57) with power supply leads
B428	3m cable to AIR Control Displays (ACD-57) with power supply leads
B429	5m cable to AIR Control Displays (ACD-57) with power supply leads
B579	AC-1 mounting tray
B584	AC-1 installation kit for direct mounting of AC-1 on an AIR Control Display 57

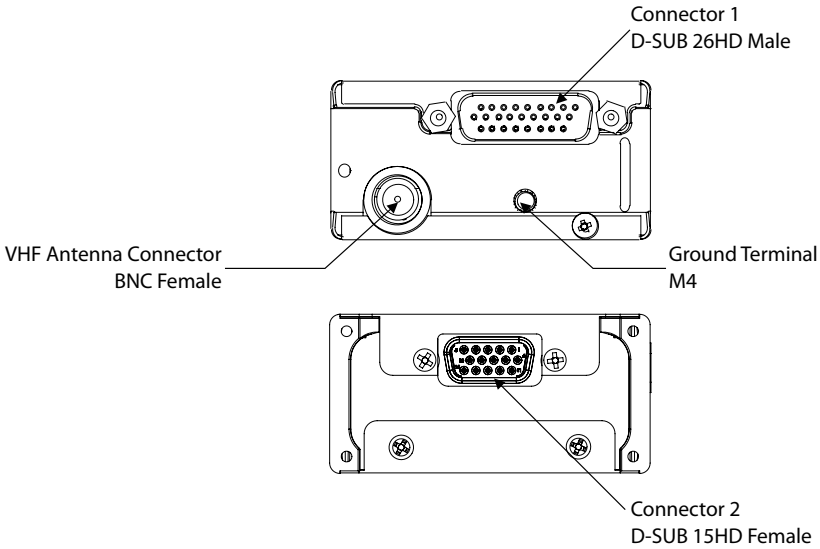

Figure 2.1.: System interconnects overview

2.1 D-SUB Power/Data/Signal Connectors

Both connectors are D-SUB high-density types. Connector 1 is a D-SUB26 HD male connector with 26 pins, connector 2 has 15 pins in a D-SUB15 HD female form factor. Small pin numbers are molded into the connectors for easier pin identification. Pin numbers of mating (male and female) connectors are identical, that means mating pins have identical numbers.

2.1.1 Connector 1

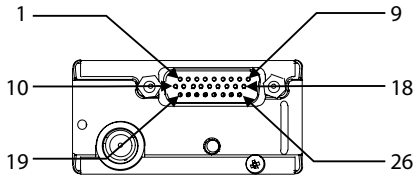

Figure 2.2.: Connector 1 pin diagram

Pin Name	*Pin number*	*I/O*	*Comment*
Aircraft Power (VIN)	1.1	In	Internally connected to pin 10
RS-232 Port 1 receive data (RXD1)	1.2	In	RS-232 interface for ext. control
Discrete Input 1 (default: $\overline{\text{PTT1}}$)	1.3	In	Configurable during installation. Default: Pilot PTT button
Lighting Bus Input (ILLUMIN)	1.4	In	Internally connected to Pin 2.11
Aircraft Ground (GND)	1.5	–	Internally connected to the pins 6 and 23
Aircraft Ground (GND)	1.6	–	Internally connected to the pins 5 and 23
Auxiliary Audio Input 1 (AUX1)	1.7	In	For warning annunciators. Volume is reduced while transmitting or receiving.
Auxiliary Audio Input 2 (AUX2)	1.8	In	For entertainment devices. Muted while transmitting or receiving.
Audio Ground (AUDIO-GND)	1.9	–	Separate GND for highly sensitive audio inputs. Never use for power supply!
Aircraft Power (VIN)	1.10	In	Internally connected to pin 1
RS-232 Port 1 transmit data (TXD1)	1.11	Out	RS-232 interface for ext. control

Pin Name	*Pin number*	*I/O*	*Comment*
Discrete Input 2 (default: $\overline{\text{PTT2}}$)	1.12	In	Configurable during installation. Default: Co-Pilot PTT button
Discrete Input 3 (default: $\overline{\text{CFGSEL}}$)	1.13	In	Configurable during installation. Default: Selects one of two audio setup configurations.
Enable ($\overline{\text{EN}}$)	1.14	In	Switches the unit on if connected to GND.
Speaker (SPK)	1.15	Out	Unbalanced, speaker must be connected to GND on one side.
Headphones Output 2 (HP2)	1.16	Out	Unbalanced, headphones must be connected to GND on one side.
Microphone Input 3 (MIC3)	1.17	In	Microphone Input 3
Microphone Input 1 (MIC1)	1.18	In	Pilot Microphone.
Data Bus Low Signal (CANLO)	1.19	In/Out	Must be connected to pin 21 to terminate the data bus. Otherwise, the communication with ACD-57 will not work.
Data Bus High Signal (CANHI)	1.20	In/Out	
Data Bus Termination 120R (CANTERM)	1.21	In	Connect to pin 19 to terminate the data bus.
Discrete Input 4 (default: $\overline{\text{IC-ENABLE}}$)	1.22	In	Configurable during installation. Default: Intercom Enable.
Aircraft Ground (GND)	1.23	–	Internally connected to the pins 5 and 6
Headphones Output 1 (HP1)	1.24	Out	Unbalanced, headphones must be connected to GND on one side
Microphone Input 2 (MIC2)	1.25	In	Co-Pilot Microphone.
Audio Ground (AUDIO-GND)	1.26	–	Separate GND for highly sensitive audio inputs. Never use for power supply!

2.1.2 Connector 2

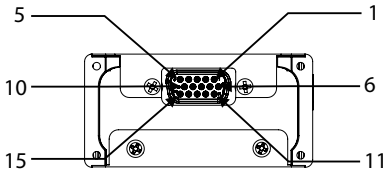

Figure 2.3.: Connector 2 pin diagram

Pin Name	*Pin number*	*I/O*	*Comment*
Power Out (VOUT)	2.1	Out	Supplies aircraft power, intern. connected to pin 2.6
RS-232 Port 2 transmit data (TXD2)	2.2	Out	RS-232 interface for ext. control
RS-232 Port 2 receive data (RXD2)	2.3	In	RS-232 interface for ext. control
Enable ($\overline{EN}$)	2.4	In	Switches the unit on if connected to GND.
Aircraft Ground (GND)	2.5	–	Internally connected to pin 14
Power Out (VOUT)	2.6	Out	Supplies aircraft power, intern. connected to pin 2.1
Data Bus Low Signal (CANLO)	2.7	In/Out	
Data Bus High Signal (CANHI)	2.8	In/Out	
N/C	2.9	–	Internally not connected
N/C	2.10	–	Internally not connected
Lighting Bus Output (ILLUMOUT)	2.11	Out	Internally connected to Pin 1.4
N/C	2.12	–	Internally not connected
Reserved	2.13	–	Do not connect
Aircraft Ground (GND)	2.14	–	Internally connected to pin 5
N/C	2.15	–	Internally not connected

2.1.3 BNC RF Connector

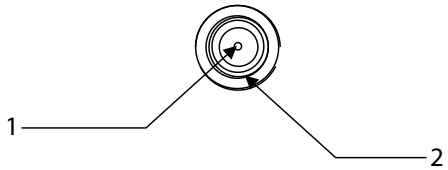

Figure 2.4.: BNC RF connector pin diagram

Name	*Number*	*I/O*
RF Signal (inner conductor)	3.1	In/Out
RF GND (Shield)	3.2	–

2.2 Data Interfaces

2.2.1 Bus Data Interface

AC-1 uses a CAN bus data interface to connect to other AIR Avionics devices such as AIR Control Displays. The CAN bus data interface is a differential high speed signal.

> Details are specified in the interconnect drawing.

Pin Name	*Pin number*	*I/O*
CANHI	1.20 and 2.8	In/Out
CANLO	1.19 and 2.7	In/Out

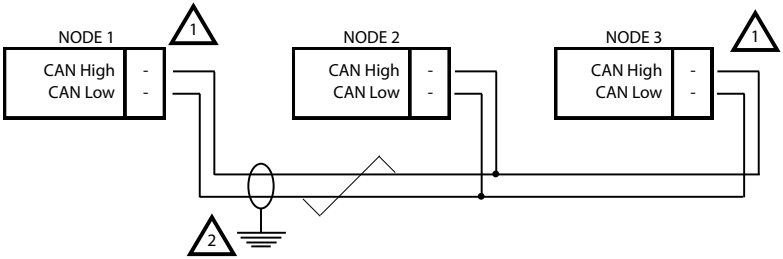

1 TERMINATION RESISTOR OF 120 OHM REQUIRED ON EACH END OF THE DATA BUS. EITHER A RESISTOR IS TO BE INSTALLED BETWEEN CAN-HIGH AND CAN-LOW, OR A SUITABLE TERMINATION PIN OR THE INTERNAL RESISTOR VIA CANTERM PIN IS TO BE USED.

2 CABLE SHIELD SHALL BE CONNECTED TO GND ON EACH NODE OF THE DATA BUS.

THIS SYMBOL REPRESENTS TWISTED PAIR CABLES

Figure 2.5.: Generic data bus wiring diagram between data bus nodes

> The maximum recommended cable length between data bus nodes is 10 m.

> Only AIR Avionics articles intended for use with AC-1 may be connected to the data bus.

The data bus interface (CAN bus) consists of two data wires. The differential high-speed signal requires impedance controlled shielded cables or at least twisted pair shielded cables.

The data bus interface requires termination resistors to be installed on each end of the bus (120 Ohm). On connector 1, a pin (pin 1.21) is available, that is internally connected to the CANHI pin over a built-in 120 Ohm termination resistor. These pins can be used to terminate the data bus. External termination resistors are not required and shall not be installed if the termination is accomplished using these pins (recommended).

> Make sure that the shielding and the termination is installed properly. AIR COM will not work if the data bus termination is not installed. In simple installations where the AIR COM sits directly on an AIR Control Display, please make sure that Pins 1.19 and 1.21 are bridged with a short cable.

2.2.2 Serial Data Interface

AC-1 is capable of interfacing with other aviation instruments by sending and/or receiving RS-232 data on its RS-232 ports.

The RS-232 outputs conform to RS-232C (EIA Standard) with a postive and negative output voltage of at least 5 V when driving a standard RS232 load.

Pin Name	*Pin number*	*I/O*
RS232 Port 1 data out (TX)	1.11	Out
RS232 Port 1 data in (RX)	1.2	In
RS232 Port 2 data out (TX)	2.2	Out
RS232 Port 2 data in (RX)	2.3	In

The use of a twisted pair shielded cable, e.g. MIL-C-27500-22TG 2T14 is highly recommended. With this cable both data wires and the GND reference can be connected using a single cable.

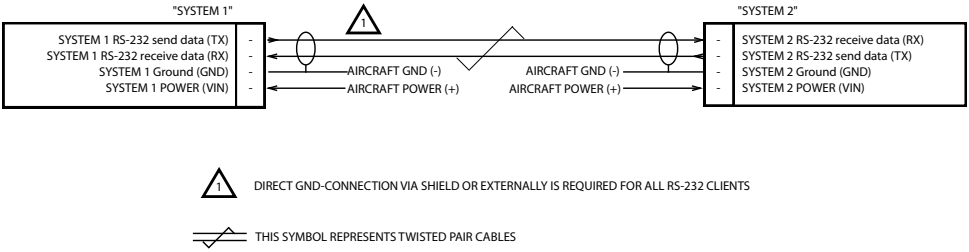

Figure 2.6.: Generic RS-232 wiring recommendation between “System 1” and “System 2”

> It is not sufficient that power supply ground on both devices is connected to aircraft ground. An additional direct ground connection is mandatory.

The table below contains maximum recommended cable lengths when using shielded data cables for an RS-232 data interface. Exceeding these cable lengths may reduce signal integrity and compromise the reliability of the data interface.

Data Rate	*Max. Cable Length*	*Comment*
9600 Baud	15 m	Standard data rate for the AIR Traffic and most COMM data protocols

2.3 Power Supply

This section covers the power input requirements. Please, see above for interconnect information and wiring recommendations.

2.3.1 Power Supply

The power inputs on connector 1 provide power. It is recommended to connect multiple power pins and multiple ground pins.

We recommend the installation of a 3A manually resettable circuit breaker in the power supply line, e.g. a *Sensata Klixon 7277-2-3*. Using such a circuit breaker ensures that the

AC-1 can be switched off by the flight crew if required. Additionally, in the case of a non-permanent malfunction the power supply can be restored. The circuit breaker shall be clearly labeled.

Pin Name	*Pin number*	*I/O*
Aircraft Power	1.1 and 1.10	In
Aircraft Ground	1.5, 1.6, and 1.23	–

> Connection of input power to incorrect pins can cause damage to the unit that will require return to the factory for repair. Especially the AUDIO-GND pins must not be connected to aircraft GND for power supply. Ensure that the power supply is connected to the correct pins only and that it does not short to any adjacent pins prior to applying power to the unit.

2.3.2 Power Output

Connector 2 features a supply power output. The output pins directly connect to the VIN pins on connector 1. Their main intention is to supply an AIR Control Display (ACD-57), if the AC-1 is directly attached to such a display.

Pin Name	*Pin number*	*I/O*
Power Output	2.1/2.6	Out
Ground (GND)	2.5/2.14	–

2.3.3 Enable Interface

Both connectors feature a pin that powers the AC-1 on when pulled to ground/low. For AC-1 to power up, at least one of these two pins must be connected to ground (GND).

Pin Name	*Pin number*	*I/O*
Enable	1.14/2.4	In (Active Low)

If the AC-1 is installed in combination with an AIR Control Display (ACD-57), the pin is always automatically pulled to ground/low when the ACD is powered up.

An external switch can be connected, if the AC-1 is to be switched on/off manually.

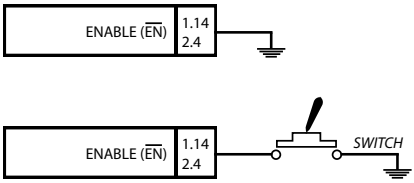

Figure 2.7.: If the AC-1 is not installed in combination with an AIR Control Display, or another device compatible to the enable-interface, either Pin 1.22 or pin 2.4 have to be connected to GND. Connection can be made permanently (the AC-1 is always switched on if supply power is present) or over a switch (AC-1 is only switched on if the connection to GND is made)

2.4 Discrete Inputs

AC-1 features several discrete inputs. These active-low discrete inputs are considered active, if the voltage to ground is below 5 V +/-0.5 V. The polarity of the function can be configured. Functions can either be executed when the input is active or when the input is not active.

Pin Name	*Pin number*	*I/O*	*Function*
Discrete Input 1	1.3	In	Configurable, default: PTT1
Discrete Input 2	1.12	In	Configurable, default: PTT2
Discrete Input 3	1.13	In	Configurable, default: CFGSEL
Discrete Input 4	1.22	In	Configurable, default: IC-ENABLE

Any of the four discrete inputs can be configured to the following functions:

- Push-To-Talk 1 (PTT1) - Momentary Pushbutton. Primary/Pilot PTT Button.
- Push-To-Talk 2 (PTT2) - Momentary Pushbutton. Secondary/Co-Pilot PTT Button.
- Configuration Select (CFGSEL) - Selects one of the two predefined audio setup configurations.
- Intercom Enable (IC-ENABLE) - Activates the intercom function.
- Intercom Isolation (IC-ISOL) - Activates the intercom circuit isolation. This means that the intercom circuits between HP1 and HP2 are isolated. This may be useful, for example, if HP1 is used for the flight crew audio and HP2 is used for passenger audio.
- Transmitter Interlock (TXIL) - Blocks/locks the transmit function while active. Useful, for example, if this AC-1 is configured as a secondary radio and transmitting shall be prevented while the primary radio is transmitting.
- COM Channel Transfer (XFER) - Momentary Pushbutton. Flip-Flops/Swaps the primary and secondary channels.

- Squelch Disable (RXTEST) - Disables the squelch function to test the receiver, for example, for volume adjustment without signals being received.
- Dual Watch (DWATCH) - Disables or enables the secondary channel monitoring (dual-watch) function as an override. This will have no effect if the secondary channel volume is set to zero.
- Say Again/Replay (SAGN) - Momentary Pushbutton. Starts the replay of the latest received transmission, or advances to the next transmission. If pushed longer than 1 s, the last replayed transmission is repeated.

2.4.1 Microphone Inputs

AC-1 features three independent microphone inputs. All three can be configured to host either standard microphones, or dynamic microphones. Each input features a configurable gain value and is able to supply a bias voltage of 8.5V over 390 Ohms to the connected microphone.

Pin Name	*Pin number*	*Function*
Microphone Input 1 (MIC1)	1.18	Pilot Microphone
Microphone Input 2 (MIC2)	1.25	Co-Pilot Microphone
Microphone Input 3 (MIC3)	1.17	Third Microphone

2.4.2 Speaker Output

AC-1 features a speaker output. This output can be used to drive an external loudspeaker, for example a 4 Ohms speaker. The speaker output is unbalanced, this means, one side of the speaker must be connected to GND.

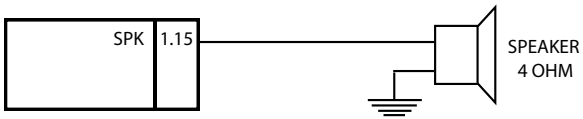

Figure 2.8.: Speaker output.

Pin Name	*Pin number*	*Function*
Speaker output (SPK)	1.15	Speaker audio output.

2.4.3 Headphone Outputs

AC-1 features two headphone outputs. Both outputs can be connected to headphones, for example in aviation headsets. The headphone outputs are unbalanced, this means, the headphones must be connected to GND on the side of the AC-1. Please do not connect the headphones to GND on the headphone side.

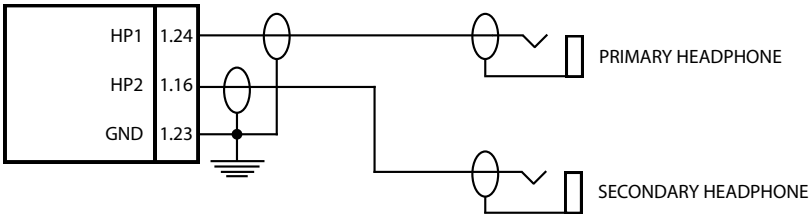

Figure 2.9.: Headphone outputs.

Pin Name	*Pin number*	*Function*
Headphones Output 1	1.24	Pilot headphone audio output.
Headphones Output 2	1.16	Co-Pilot headphone audio output.

3 Workmanship

The installation of avionics equipment into an aircraft is a complex task that requires expert skills and know-how. While some installation practices may lead to quicker results, only practices that provide for excellent durability and reliability are acceptable. As many avionics systems have a life cycle of several decades, a durable and reliable installation in compliance to strict workmanship standards is of utmost importance.

3.1 Workmanship

"Workmanship is defined as the control of design features, materials and assembly processes to achieve the desired durability and reliability for subassembly interconnections, specifically those in printed wiring assemblies and cable harnesses, and the use of inspection techniques and criteria to assure interconnect quality.Workmanship promotes standardized designs and fabrication practices to enhance assembly durability and reliability and restricts the use of designs and manufacturing processes known to reduce those qualities."[1]

3.2 Standards

> Always follow acceptable avionics installation practices. The installation must always follow regulatory requirements.

Many military or civil standards for avionics installations are acceptable.

3.2.1 NASA Workmanship Standards

As an addition to regulatory requirements, we recommend installation following NASA WORKMANSHIP STANDARDS. These standards provide for an excellent overview and in-detail knowledge on acceptable practices including explanations and a pictorial reference. NASA WORKMANSHIP STANDARDS are publicly available on this website: *http://nepp.nasa.gov/workmanship*

3.2.2 Pictorial Reference

On *http://workmanship.nasa.gov* a pictorial reference "intended to provide insight to certified operators, inspectors, and instructors who visually assess the compliance of flight hardware to locally applicable requirements"[2] is available.

[1] Source: http://nepp.nasa.gov/workmanship
[2] Source http://workmanship.nasa.gov

4.1 Control Device Compatibility Considerations

AC-1 is designed to be controlled by AIR Avionics AIR Control Displays, for example, the ACD-57.

4.1.1 Compatible Control Devices

Device	*P/N*	*Make*	*Interface*	*SW Version*	
				Required	*Tested*
AIR Control Display	ACD-57	AIR Avionics	CAN, RS-232	$\geq$ 0.44	0.44

4.2 Antenna Considerations

For mounting location considerations for the COM antenna required for AC-1 please refer to aircraft manufacturer data and/or other applicable documentation.

4.2.1 Ground Plane

When a conventional aircraft antenna is used a ground plane is required for correct function. The ground plane should be as large as possible. In a metal aircraft this is usually easy to accomplish, but is more difficult in a composite or fabric skinned aircraft. In these cases a metallic ground plane should be fabricated and fitted under the antenna.

The thickness of the material used to construct the ground plane is not critical, providing it is sufficiently conductive. A variety of proprietary mesh and grid solutions are available.

4.2.2 Antenna Cable

Only high quality antenna cable like RG-400 is recommended.

- It should not be possible for the antenna cable to be exposed to wire chafing.
- The cable shall never be kinked.
- Route the cable as short as possible. Avoid sharp bends.
- Secure the cable in order to minimize vibration damage.
- The antenna cable should not be located near flight control cables and controls, high voltage lines, ADF antenna cables, and other sources of interference.

4.3 Cabling and Wiring Considerations

4.3.1 General Wiring Considerations

Wiring should be installed in accordance with applicable regulations.

- It should not be possible for a cable harness to be exposed to wire chafing.
- Route the wiring bundle as appropriate. Avoid sharp bends.
- Secure all wires in order to minimize vibration damage.
- Prefeably shielded wire is to be used.
- Always use the wire gauge specified in the interconnect drawing. Use 22 or 24 AWG wire for all other connections unless otherwise specified.
- The cable harness should not be located near flight control cables and controls, high voltage lines or fuel lines.
- The cable harness should be located in a protected area of the aircraft (e.g. isolated from engine rotor burst).

> For dual COM installations, care should be taken to ensure separation between wires of redundant systems to reduce the possibility of a failure due to a single event.

4.3.2 Special Wiring Requirements for Audio Signals

For any wires carrying an audio signal, shielded wire should be used to avoid any unwanted signals interfering with the radio installation. Unshielded wires can act as small antennas and transmissions from other avionics on the aircraft could be picked up by the radio and heard as interference in the connected headsets.

For example, Mode-S transponder transmissions can be audible as clicking sounds in the headset and cause an annoying distraction to the pilot.

Correctly terminated shielded wiring will limit any unwanted transmissions being picked up by the radio and should be used on the MIC and HEADPHONE lines.

4.3.3 Special Wiring Requirements for the Data Bus

- Twisted pair shielded wires must be used for differential databus signals as specified in the interconnect drawing.
- Termination resistors are required on each end of the databus installation.

> If the databus wiring requirements are not met, equipment performance may be compromised.

> Make sure that the shielding and the termination resistors are installed where required. AIR COM will not work if the data bus termination is not installed. In simple installations

where the AIR COM sits directly on an AIR Control Display, please make sure that Pins 1.19 and 1.21 are bridged with a short cable.

4.4 AC-1 Mounting Considerations

Be sure that the installation does not interfere with any aircraft controls and emergency features such as canopy jettison

Two mounting options are possible:

- AC-1 can be mounted in combination with an *AIR Avionics* - AIR Control Display, for example the ACD-57.
- AC-1 can be mounted in a mounting tray or rack

When mounting the AC-1 directly on an ACD-57, please ensure that the quick-lock bolts in the ACD-57 are removed and the supplied replacement screws are installed prior to mounting the AC-1. Removing the quick-lock bolts without installing the new screws will damage the ACD internally.

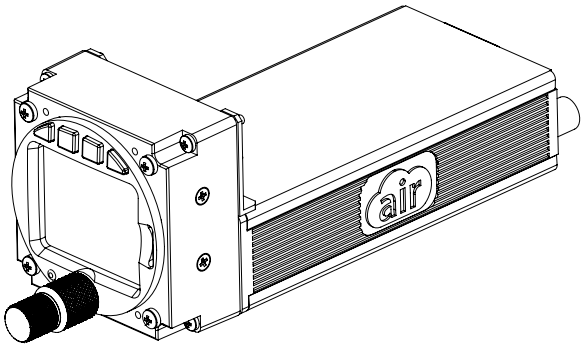

Figure 4.1.: AC-1 mounted directly on an ACD-57.

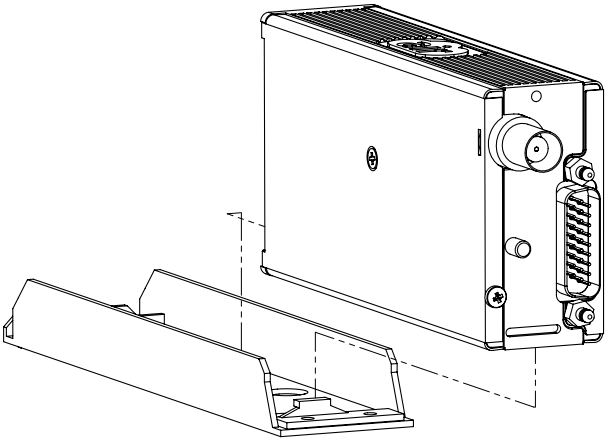

Figure 4.2.: AC-1 mounted in a tray.

4.5 Air Circulation and Cooling

AC-1 does not require external cooling. However lower operating temperatures extend equipment life. Reducing the operating temperature reduces the mean time between failures (MTBF).

> Do not mount AC-1 where it can be exposed to heat, for example in the engine compartment.

A high transmission duty cycle leads to higher internal device temperatures, mainly because during transmission, energy from the transmitter dissipates as heat. Although AC-1 features a sophisticated housing design with regards to thermal management, the unit may still overheat if transmitting extensively at higher ambient temperatures. In the case of an overheat condition, the transmitter output power is temporarily reduced.

Units tightly installed heat each other through radiation, convection, and sometimes by direct conduction. Even a single unit operates at a much higher temperature in still air than in moving air. Fans or some other means of moving the air around electronic equipment are usually a worthwhile investment.

> If possible, make sure that the grooves in the AC-1 housing intended for heat disssipation are exposed to fresh air

4.6 Compass Safe Distance

After reconfiguring the avionics in the cockpit panel, if the AC-1 is mounted less than 25 cm from the compass, recalibrate the compass and make the necessary changes for noting correction data.

5 Installation Procedures

We recommend installing AC-1 following these steps:

1. Equipment mounting.
2. Manufacturing and testing of wiring harness or selection of standard accessories.
3. Wiring harness and interconnect installation.
4. Post installation configuration, checkout, and documentation.

5.1 General Handling Recommendations

5.1.1 ESD Handling Recommendations

To avoid damage to the AC-1, take precautions to prevent Electro-Static Discharge (ESD) when handling the unit, connectors, and associated wiring. ESD damage can be prevented by touching an object that is of the same electrical potential as the unit before handling the unit itself.

> AC-1 is ESD sensitive! Always handle with care. Always use antistatic packaging for transport and/or storage.

5.2 Wiring Harness Assembly

Where possible, it is recommended to assemble and test the wiring harness before the installation into the aircaft.

Appendix A.2 holds a generic wiring diagram. Appendix B holds standard installations with standard wiring recommendations. It is recommended to follow these standard examples.

> Additionally, Appendix B holds standard configuration parameters that match these specific wiring examples.

> Make sure that the shielding and the termination resistors are installed properly. AIR COM will not work if the data bus termination is not installed. In simple installations where the AIR COM sits directly on an AIR Control Display, please make sure that Pins 1.19 and 1.21 are bridged with a short cable.

5.3 Equipment Mounting

Use the dimensions shown in appendix A.1 to prepare your installation. Decide as to whether the unit is installed in combination with an AIR Control Display or remotely in a mounting tray.

5.3.1 Mounting with the AIR Control Display 57

In order to install the AC-1 on an AIR Control Display 57 (ACD-57), a mounting kit with a bracket and small parts is required (B584).

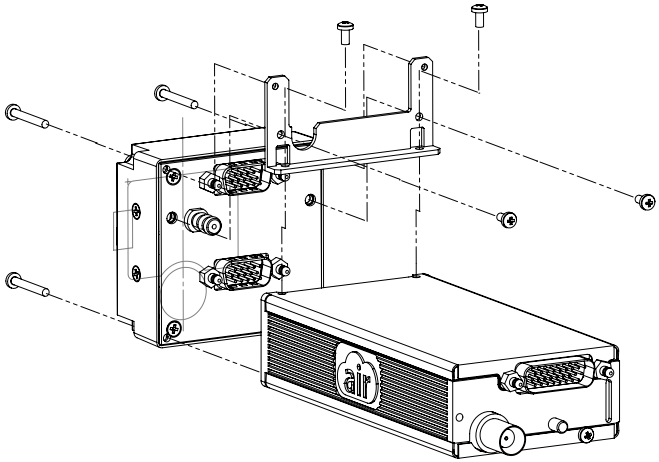

Figure 5.1.: Exploded drawing of ACD-57, AC-1, and all small parts of the optional mounting kit.

1. Prior to installation of the combination of ACD and AC, if already installed, please uninstall the ACD.
2. Install the AC-1 mounting bracket on the ACD. Connect connector 2 of the AC-1 to the lower rear connector (connector 2) of the ACD.
3. Use the supplied screws to secure AC-1 on the ACD, install the ACD/AC-1 combination in the instrument panel using the supplied M3 panel screws.

5.3.2 Remote Mounting

1. Prepare the mounting holes for the AC-1 mounting tray.
2. Install the mounting tray in your aircraft. Ensure there is sufficient space for the AC-1 main unit and all of the required cables and connectors.

3. Install the device in the mounting tray. Make sure the integrated locking lever has locked correctly.

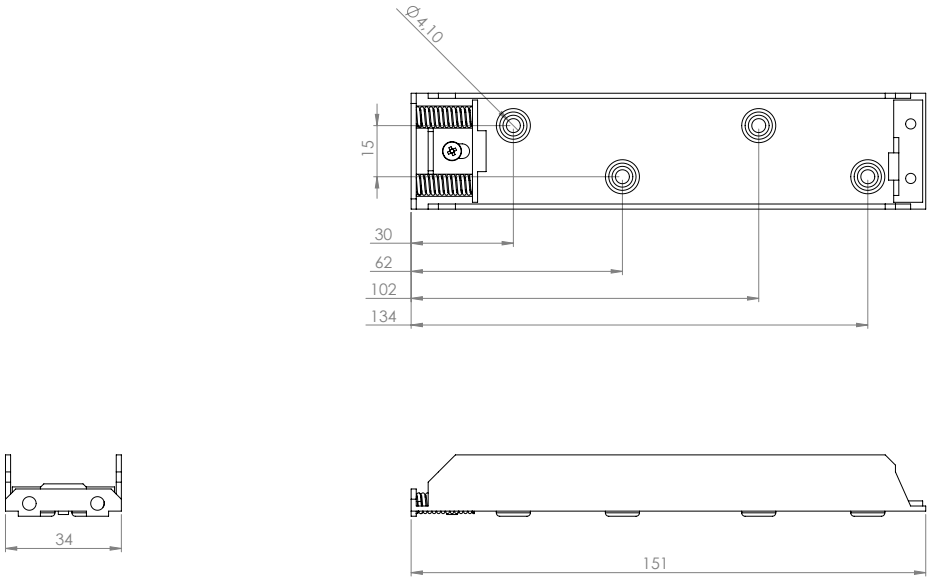

Figure 5.2.: Mounting tray dimensions

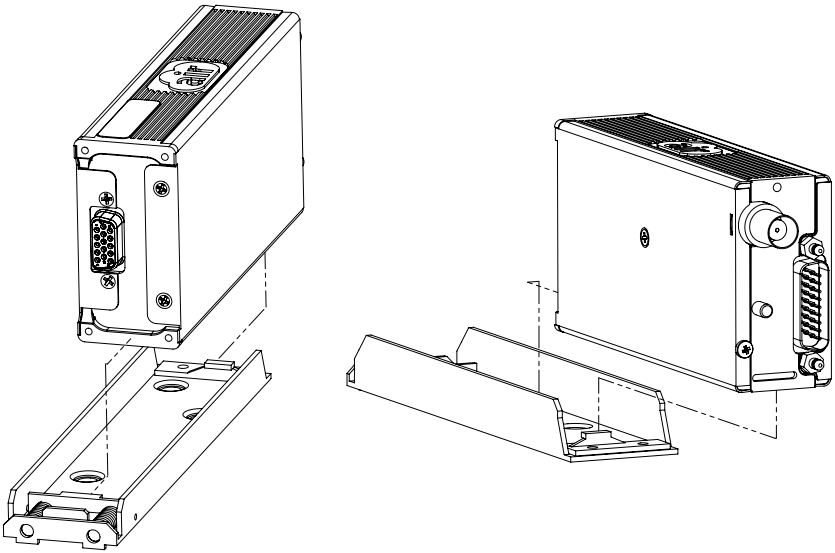

Figure 5.3.: AC-1 installation in the tray.

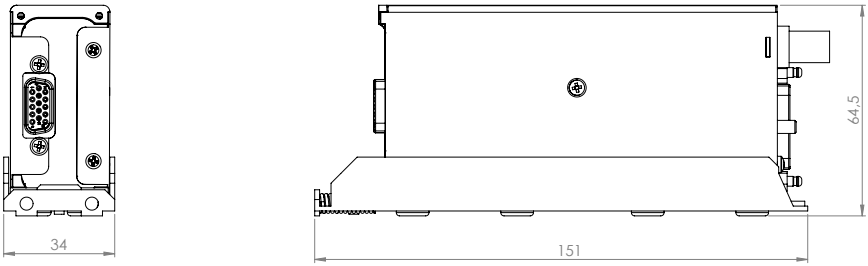

Figure 5.4.: AC-1 mounted in a tray with dimensions.

5.4 Interconnect Installation

1. Install all D-Sub electrical connectors and ensure that they are appropriately secured. We recommend using “Quicklock” D-Sub backshells (standard configuration).
2. Install the BNC RF-Connector. Make sure that the bayonet connector is fastened correctly.

5.5 Post Installation Configuration, Checkout, and Documentation

A summary of the steps required for checkout, configuration, and installation documentation is as follows:

- Perform the installation checks. Instructions can be found in chapter 6.
- Configure the unit for the specific installation. Work through every configuration item of the instructions in chapter 7.
- Perform ground checks. Instructions can be found in chapter 8.
- Update the aircraft documentation. Instructions can be found in chapter 9.

Post Installation Checkout 6

This section contains instructions about configuring AC-1 for each installation as well as checks to ensure the system is properly installed and functions correctly. A summary of the steps required for configuration and checkout is as follows:

- Perform the installation checks
- Configure the unit for the specific installation
- Perform the ground checks
- Update the aircraft documentation

6.1 Wiring Checks

Verify that all cables are properly secured. Check the movement of the aircraft controls to verify there is no interference between the cabling and the controls. Ensure that all wiring is installed as described.

Prior to powering up the AC-1, the wiring harness must be checked for proper connections to the aircraft systems and other avionics equipment. Point to point continuity must be checked to expose any faults such as shorting to ground.

After accomplishing a continuity check, perform power and ground checks to verify proper power and GND levels are present. Any faults or discrepancies should be corrected at this time.

> Any faults or discrepancies must be corrected before proceeding.

> Make sure that the shielding and the termination resistors are installed where required. AIR COM will not work if the data bus termination is not installed. In simple installations where the AIR COM sits directly on an AIR Control Display, please make sure that Pins 1.19 and 1.21 are bridged with a short cable.

The AC-1 may be connected after completion of the continuity and power checks. All connections must be made before the unit is powered up.

6.2 Connector Engagement Checks

Prior to powering up AC-1, a connector engagement check should be performed.

1. Optically inspect all interconnects.
2. Check if all connectors are locked properly, verify by gently pulling on the connectors.

7 System Configuration

7.1 General

AC-1 holds many functions and has many installation options. Therefore, prior to using AC-1, the unit has to be configured to its specific installation environment and intended use.

The system configuration can be accomplished, for example, by using a suitable control device (for example, an AIR Control Display). This manual does not detail the configuration process itself but rather gives an overview of configurable parameters and their possible values.

Please note that most installation-level parameters are inaccessible to the flight crew during normal operation. They require the entry of a pin code in the ACD-57: *3000*.

Appendix B holds standard installations with wiring and corresponding configuration parameters. For optimum equipment performance, we recommend to apply the same wiring and configuration parameters as in these standard installations.

7.2 Audio Configuration 1 and Audio Configuration 2

AC-1 features two independent audio configurations for different microphone inputs and the loudspeaker.

In most installations, only one such audio configuration (Audio Configuration 1) will be used. However, in some cases, it may be useful to switch between the two configurations in-flight by means of a flip switch on a discrete input.

This is particularly useful in aircraft with audio requirements that change in-flight, for example, in motorgliders: While the engine is running, headphones are used. When flying with the engine off, goose-neck microphones and loudspeakers are used.

To access the parameters, in the menu of a connected AIR Control Display, please navigate to *CONFIGURATION MENU* → *COM SYSTEM* → *INSTALLATION* → *AUDIO CONFIG 1* or *AUDIO CONFIG 2*.

> Audio Configuration 1 or 2 is only accessbile when the flip switch is in the correct position. If the switch is in a certain position, only the corresponding audio configuration can be accessed in the menu.

Please note that, to access this menu, the PIN CODE *3000* has to be entered into the AIR Control Display once.

Each of the two configurations, Audio Configuration 1 and Audio Configuration 2 hold the same parameters.

7.2.1 Input 1

Selects the first microphone input. If the intercom function is active, this input is used for the intercom 1.

Depending on the type of microphone used, parameters for microphone gain and bias supply voltage have to be configured differently.

- SOURCE: In this parameter, the microphone source is selected. Options to choose from are MIC1, MIC2 or MIC3.
- GAIN: This parameter sets the gain value of the selected microphone source. For an easier setup, ACD-57 indicates the current mic level. Please talk naturally into the microphone and then adjust the gain in a way that the level lies within the green bar on the indicator.
- SUPPLY: Activates and deactivates the bias supply voltage for the selected microphone source. Choose OFF for dynamic microphones and ON for electret microphones.

7.2.2 Input 2

Selects the second microphone input. If the intercom function is active, this input is used for the intercom 2.

- SOURCE: In this parameter, the microphone source is selected. Options to choose from are MIC1, MIC2 or MIC3.
- GAIN: This parameter sets the gain value of the selected microphone source. For an easier setup, ACD-57 indicates the current mic level. Please talk naturally into the microphone and then adjust the gain in a way that the level lies within the green bar on the indicator.
- SUPPLY: Activates and deactivates the bias supply voltage for the selected microphone source. Choose OFF for dynamic microphones and ON for electret microphones.

7.2.3 Speaker Enable

Enables the loadspeaker output.

- Short name in the ACD-57 menu: SPK ENABLE
- Selectable options: SPK ON, SPK OFF
- Default value: SPK OFF

7.3 Intercom

AC-1 features an intercom function. The intercom activation and the activation of an isolation funtion can be configured.

To access the below-mentioned parameters, in the menu of a connected AIR Control Display, please navigate to *CONFIGURATION MENU* → *COM SYSTEM* → *INSTALLATION* → *INTERCOM*.

Please note that to access this menu, the PIN CODE *3000* has to be entered into the AIR Control Display once.

7.3.1 General information about the intercom function

The intercom works between two groups, called INTERCOM 1 and INTERCOM 2:

1. INTERCOM 1 - The microphone input configured in the particular audio configuration and the headphone output 1 (HP1).
2. INTERCOM 2 - The microphone input configured in the particular audio configuration and the headphone output 2 (HP2).

> Any physical microphone input on the AC-1 can be assigned to the intercom 1 or intercom 2. This is done in the *Audio Configuration 1* or *Audio Configuration 2* parameters. Please find details below.

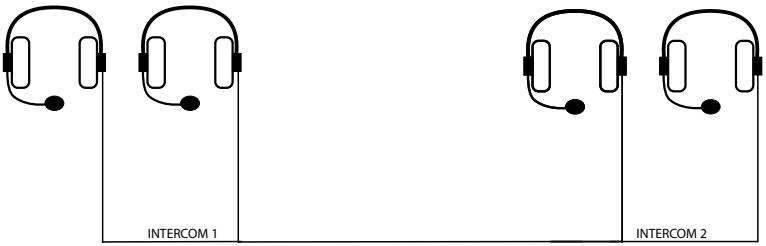

Figure 7.1.: The intercom function is active. All participants on INTERCOM 1 can talk to each other and to the INTERCOM 2 participants, who can also talk to each other and the INTERCOM 1 participants.

The intercom audio from the two groups is combined and can be isolated from each other using the Intercom Isolation function. The intercom isolation function disconnects the intercom 1 and intercom 2 groups from each other. The intercom function is still available for all participants of the intercom 1 and intercom 2 circuits. This can be useful, for example, if the intercom 1 is used for the flight crew and the intercom 2 is used for the passengers.

Figure 7.2.: The intercom function is active and the isolation function is active as well. All participants on INTERCOM 1 and INTERCOM 2 can talk to each other, however, the two groups INTERCOM 1 and INTERCOM 2 are isolated from each other.

The intercom can be permanently enabled or disabled. It can be enabled/disabled in-flight using a discrete input.

Figure 7.3.: The intercom function is not active. No participant can talk to any other participant.

7.3.2 Intercom Enable

Selects how the intercom function is enabled. The intercom function can be activated permanently (ON), never (OFF), or as desired by a discrete input (DIN).

- Short name in the ACD-57 menu: IC ENABLE
- Selectable options: IC ON, IC OFF, IC DIN
- Default value: IC OFF

7.3.3 Intercom Isolation Function

Selects how the intercom isolation function is enabled. The intercom isolation function can be activated permanently (ON), never (OFF), or as desired by a discrete input (DIN).

Additionally, it can be activated by a discrete input but only while transmitting (DIN TX) or by a discrete input but only while transmitting and receiving (DIN TX RX).

- Short name in the ACD-57 menu: IC ISOLATION
- Selectable options: IC ISOL OFF, IC ISOL ON, IC ISOL DIN, IC ISOL DIN TX, IC ISOL DIN TX RX
- Default value: IC ISOL OFF

7.4 Discrete Inputs

AC-1 features four discrete inputs. Many functions can be assigned to any of the four inputs.

To access these parameters, in the menu of a connected AIR Control Display, please navigate to *CONFIGURATION MENU* → *COM SYSTEM* → *INSTALLATION* → *DISCR INPUTS*. Please note that to access this menu, the PIN CODE *3000* has to be entered into the AIR Control Display once.

7.4.1 Discrete Input Polarity

In the menu, the polarity of all discrete inputs can be selected independently. Functions can either be executed when the input is active or when the input is not active.

By default, all inputs are active-low. This means the assigned function is executed if the input is set to GND. As an alternative, the option “active-high” can be selected. With this option selected, the assigned function is executed if the input is not set to GND.

The active-high configuration is only used in special configurations where the control element delivers a definite state, for example, 0V/12V with a low impedance like a terminated SPDT switch. Or in situations where the switch is wrongly connected (e.g. installed / labeled in the opposite direction).

> If a switch only provides "open" and "VIN" levels to the input pin, an additional external pulldown resistor (1kR) shall be installed from the discrete input pin to GND.

7.4.2 Discrete Input Functions

Selects the function for the discrete inputs 1 to 4. Each input can be configured to trigger one of the functions below.

- PTT1 - Momentary Pushbutton. Primary push-to-talk for the pilot.
- PTT2 - Momentary Pushbutton. Secondary push-to-talk for the co-pilot.
- AUDIO CFG SEL - Switches between one of the two predefined audio setup configurations.
- IC ENABLE - Switches the intercom function ON or OFF.
- IC ISOL - Switches the intercom isolation function ON or OFF.
- TX INTERLOCK - Momentary. Blocks/locks the transmit function while active.

- COM FLIP FLOP - Momentary Pushbutton. Flip-Flops/Swaps the primary and secondary channels.
- SQL Disable - Disables the squelch function to test the receiver, for example, for volume adjustment without signals being received.
- DUAL WATCH - Disables or Enables the secondary channel monitoring (dual-watch) function as an override.
- SAGN - Momentary Pushbutton. Starts the replay of the latest received transmission, or advances to the next transmission. If pushed longer than 1 s, the last replayed transmission is repeated.

Discrete Input 1 Function

- Short name in the ACD-57 menu: DIN1 FUNCTION
- Selectable options: PTT1, PTT2, AUDIO CFG SEL, IC ENABLE, IC ISOL, TX INTERLOCK, COM FLIP FLOP, SQL Disable, DUAL WATCH, SAGN.
- Default value: PTT1

Discrete Input 2 Function

- Short name in the ACD-57 menu: DIN2 FUNCTION
- Selectable options: PTT1, PTT2, AUDIO CFG SEL, IC ENABLE, IC ISOL, TX INTERLOCK, COM FLIP FLOP, SQL Disable, DUAL WATCH, SAGN.
- Default value: PTT2

Discrete Input 3 Function

- Short name in the ACD-57 menu: DIN3 FUNCTION
- Selectable options: PTT1, PTT2, AUDIO CFG SEL, IC ENABLE, IC ISOL, TX INTERLOCK, COM FLIP FLOP, SQL Disable, DUAL WATCH, SAGN.
- Default value: IC ENABLE

Discrete Input 4 Function

- Short name in the ACD-57 menu: DIN4 FUNCTION
- Selectable options: PTT1, PTT2, AUDIO CFG SEL, IC ENABLE, IC ISOL, TX INTERLOCK, COM FLIP FLOP, SQL Disable, DUAL WATCH, SAGN.
- Default value: CFG SEL

7.4.3 PTT Mode

Selects if all microphones (BOTH) are used for transmission while any push-to-talk button is pushed or only the mic corresponding to the PTT button (SINGLE): If PTT1 is pushed only audio from input 1 is used for the transmission, if PTT2 is pushed, only audio from input 2.

If INPUT1 is selected, only the microphone corresponding to the PTT button is used, however, if both buttons are pushed, PTT1/INPUT1 has priority. For INPUT2, only the microphone

corresponding to the PTT button is used, however, if both buttons are pushed, PTT2/INPUT2 has priority.

To access this parameter, in the menu of a connected AIR Control Display, please navigate to *CONFIGURATION MENU* → *COM SYSTEM* → *INSTALLATION* → *DISCR INPUTS* → *PTT MODE*. Please note that to access this menu, the PIN CODE *3000* has to be entered into the AIR Control Display once.

- Short name in the ACD-57 menu: PTT MODE
- Selectable options: SINGLE, INPUT1, INPUT1, BOTH
- Default value: BOTH

7.5 COM Sidetone

The volume of the COM Sidetone, that is the tone you hear in the headphones while transmitting (yourself), can be adjusted.

To change the sidetone volume, navigate to *CONFIGURATION MENU* → *COM SYSTEM* → *COM SIDETONE*.

8.1 Interface Checkout

8.1.1 Data Bus Check

In order to test data bus integrity and bus load, a pragmatic function test of AC-1 connected to a second bus node can be performed. The second node must be equipped with a display and compatible to AC-1, for example an AIR Control Display. After at least 20 minutes of continuous operation, check data validity and correct function by checking and verifying that no errors are detected.

> If available, we recommend the use of professional CAN bus analysis tools.

Serial Interface Check

If used, the serial data interface of the unit can be checked with a pragmatic function test.

1. Connect AC-1 and another compatible avionics system via a serial data port.
2. Verify correct operation.

8.1.2 Discrete Inputs Checkout

1. For each of the switches that are connected, exercise the switch source.
2. Verify that the function controlled by the switch operates as intended.
3. If the switch is exercised and does not cause the AC-1 to operate as intended, verify the wiring between the AC-1 and the switch.

8.2 Version / Revision Check

Verify that the currently installed software version/device modification/revision is approved and suitable for your aircraft and configuration. Verify compatiblity to all connected systems by cross-checking compatibility lists of all involved systems.

AC-1 software and hardware identification and version information can be reviewed on a suitable control device, for example AIR Control Display. For details on Menu location, please consult the documentation of this device.

8.3 VHF COM Ground Checks

8.3.1 Antenna Check

If desired, the antenna VSWR can be checked using an inline wattmeter in the antenna coaxial using frequencies near both ends of the band. The VSWR should be less than 2:1. A VSWR of 2:1 will cause a drop in output power of approximately 12 percent.

A VSWR larger than rougly 6:1, mostly obtained with bad antennas, connectors or cables, will prevent the AC-1 from transmitting. A warning sound and a warning message is shown in the connected display unit.

8.3.2 Receiver/Transmitter Check

Tune the unit to a local VHF frequency and verify the receiver output produces a clear and understandable audio output. Verify the transmitter functions properly by contacting another station and getting a report of reliable communications.

8.3.3 Aux Audio Input Check

This check is only required for installations with an audio source connected to the aux audio input pins.

1. Connect an audio source to the Aux Audio input.
2. Verify that AUX audio is heard.

8.4 Software Loading

AC-1 features field updateable software. Updates are performed using suitable control devices. For details on the update process, please consult the operating/pilot's manuals of these control devices, for example, the AIR Avionics AIR Control Display 57 (ACD-57).

Please verify that the currently released and correct software version is loaded onto the AC-1. To access the AC-1 software version information, in the menu of a connected AIR Control Display, please navigate to *CONFIGURATION MENU* → *COM SYSTEM* → *INFO*.

Configuration and Checkout Documentation 9

9.1 Configuration Documentation

> It is mandatory for each configuration, that the configuration is logged in a document that is to be added to the aircraft records.

An example for a configuration log form is provided in appendix E.

9.2 Checkout Documentation

> It is mandatory for each installation, that the checkout is logged in a document that is to be added to the aircraft records.

An example for a checkout log form is provided in appendix F.

10 Instructions for Continued Airworthiness

AC-1 has been designed to allow “on condition” maintenance. Other than the periodic functional checks required by regulations, no periodic maintenance schedule is required to maintain continued airworthiness.

We recommend testing the function of AC-1 prior to each first flight on a day by means of a “com check” with another station.

> Make sure that all legal and operational maintenance requirements are met. Your environment (region, aircraft, organization) may require periodic equipment maintenance. This may require regular maintainance and/or checks of the AC-1.

Troubleshooting 11

11.1 My AIR COM does not communicate with my ACD-57, I only see red crosses

This can happen due to a bad configuration, a bad installation, or due to failure to install the data bus termination.

- Please verify that all parameters in *COM CONTROL* → *INSTALLATION* in the ACD-57 are set correctly.
- Cable not connected properly. Please double check the connectors and cables
- CAN termination not installed. Check if the termination is done properly, e.g. if the pins 1.19 and 1.21 are connected.

11.2 Other stations only hear me very quietly

The microphone gain value may be too low or the microphone supply may be deactivated.

- In your ACD-57, enter the menu and navigate to *COM SYSTEM* → *INSTALLATION* → *AUDIO CONFIGURATION 1 or 2* → *INPUT 1 or 2* → *GAIN* and set your microphone gain level correctly. Please ensure that the level indicator is in the green band when speaking into the microphone. Adjust the gain level until this is the case.
- If you use a standard mic,ensure that the supply is activated. Navigate to *COM SYSTEM* → *INSTALLATION* → *AUDIO CONFIGURATION 1 or 2* → *INPUT 1 or 2* → *SUPPLY* to verify this.

> Please note: AUDIO CONFIGURATION 1 or 2 is to be selected specifically with regards to the currently active configuration Inpout 1 or 2 depend on the microphone normally in use.

A Assembly And Installation Drawings

A.1 Dimensional Drawings

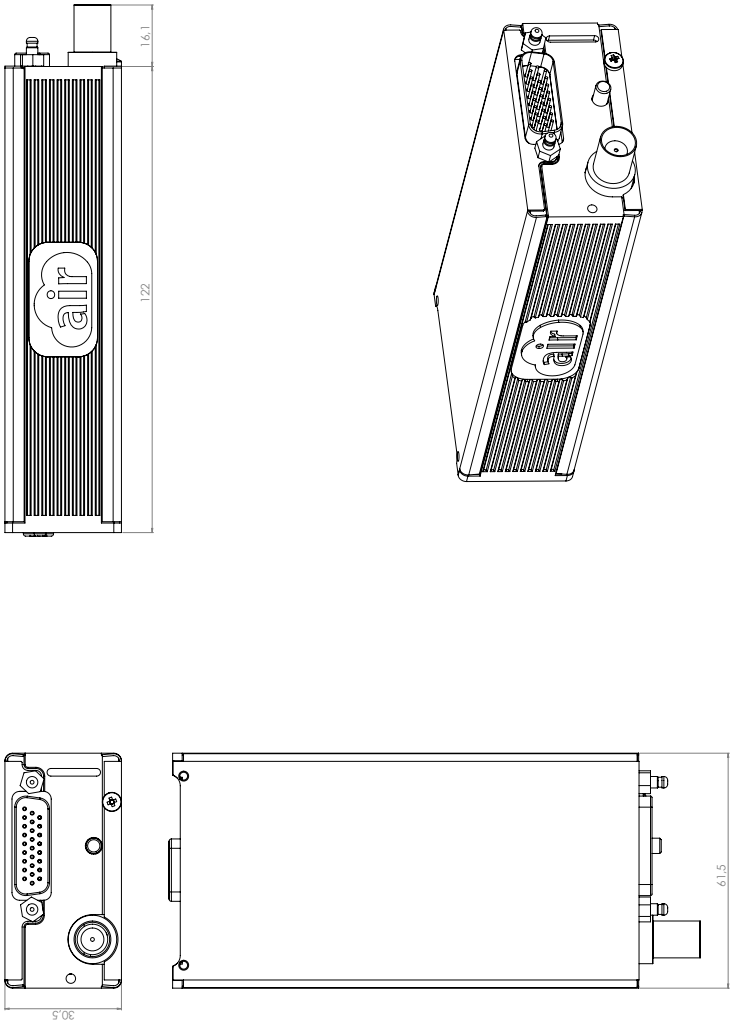

Figure A.1.: Dimensional drawing.

A.2 Generic Wiring Diagram

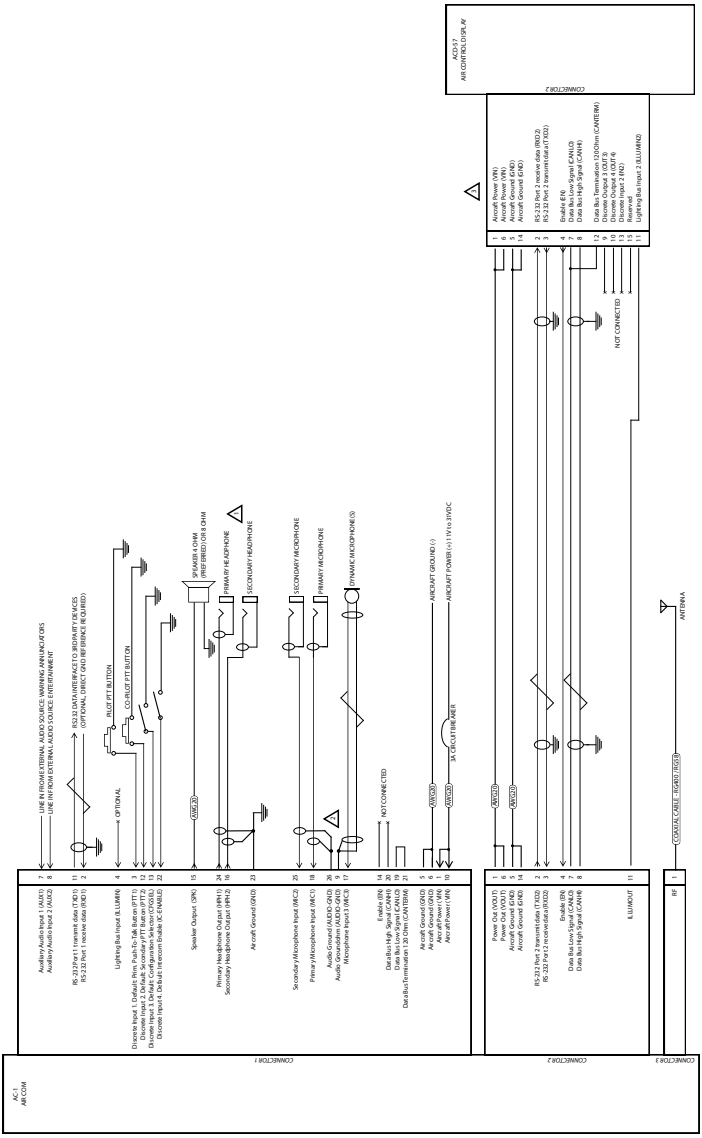

Figure A.2.: Generic Wiring Diagram.

B Standard Installations

B.1 Two-seat aircraft

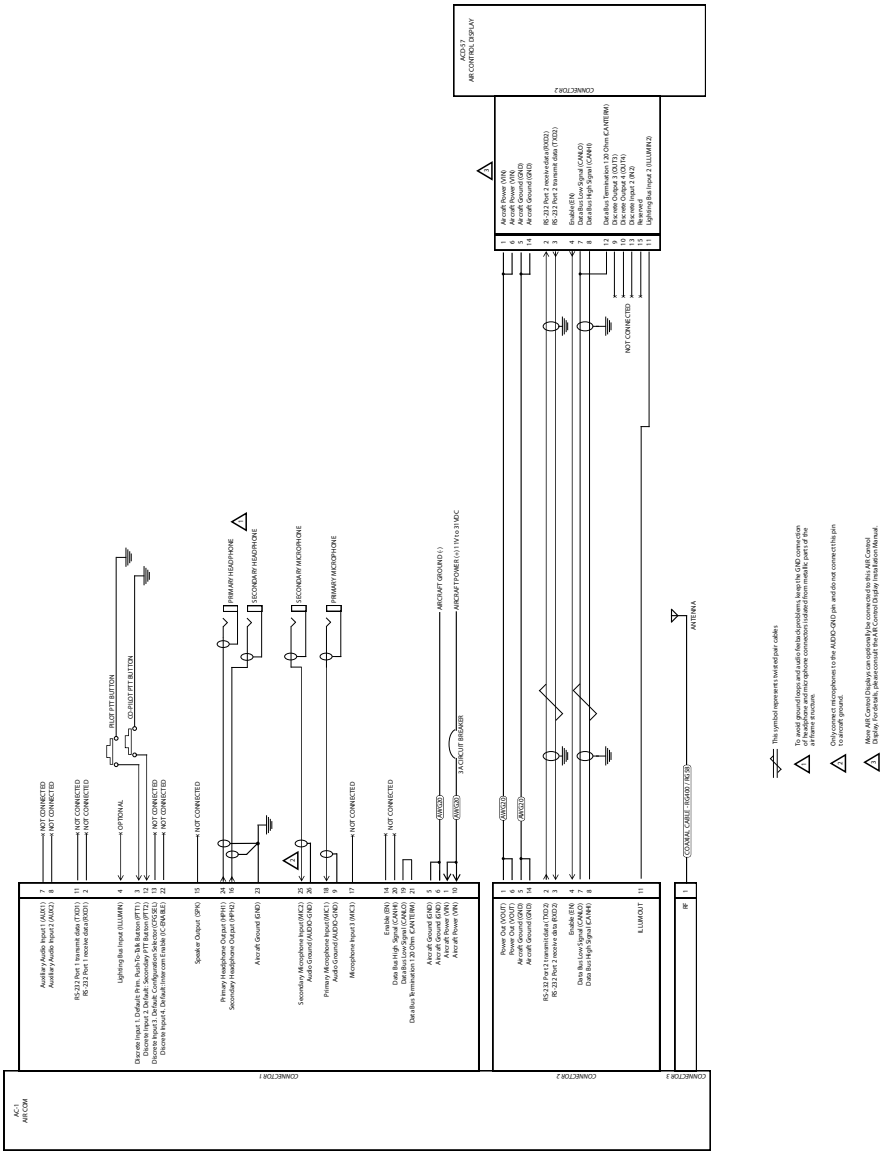

Figure B.1.: Wiring recommendation for a two-seat aircraft using headphones.

B.1.1 Parameters for a two-seat aircraft.

The following table holds parameters for a two-seat aircraft to be set up in a connected ACD-57 in the ACD configuration menu under *MENU → COM SYSTEM → INSTALLATION*.

Please note that to access this menu, the PIN CODE 3000 has to be entered into the ACD-57 first under *MENU → PIN CODE*.

Parameter	*Recommended Value*
AUDIO CFG 1 → INPUT 1 → SOURCE	MIC1
AUDIO CFG 1 → INPUT 1 → MIC GAIN	Ca. 15-25dB - tuned to the microphone's requirements
AUDIO CFG 1 → INPUT 1 → MIC SUPPLY	ON
AUDIO CFG 1 → INPUT 2 → SOURCE	MIC2
AUDIO CFG 1 → INPUT 2 → MIC GAIN	Ca. 15-25dB - tuned to the microphone's requirements
AUDIO CFG 1 → INPUT 2 → MIC SUPPLY	ON
AUDIO CFG 1 → SPK ENABLE	SPK OFF
AUDIO CFG 2 → INPUT 1 → SOURCE	NONE
AUDIO CFG 2 → INPUT 1 → MIC GAIN	–
AUDIO CFG 2 → INPUT 1 → MIC SUPPLY	OFF
AUDIO CFG 2 → INPUT 2 → SOURCE	NONE
AUDIO CFG 2 → INPUT 2 → MIC GAIN	–
AUDIO CFG 2 → INPUT 2 → MIC SUPPLY	OFF
AUDIO CFG 2 → SPK ENABLE	SPK OFF
INTERCOM → IC ENABLE	ON
INTERCOM → IC ISOLATION	OFF
DISCR INPUTS → DIN1 FUNC	PTT1
DISCR INPUTS → DIN1 POL	ACT LOW
DISCR INPUTS → DIN2 FUNC	PTT2
DISCR INPUTS → DIN2 POL	ACT LOW
DISCR INPUTS → DIN3 FUNC	NONE
DISCR INPUTS → DIN3 POL	ACT LOW
DISCR INPUTS → DIN4 FUNC	NONE
DISCR INPUTS → DIN4 POL	ACT LOW
DISCR INPUTS → PTT MODE	SINGLE

B.2 Four-seat aircraft

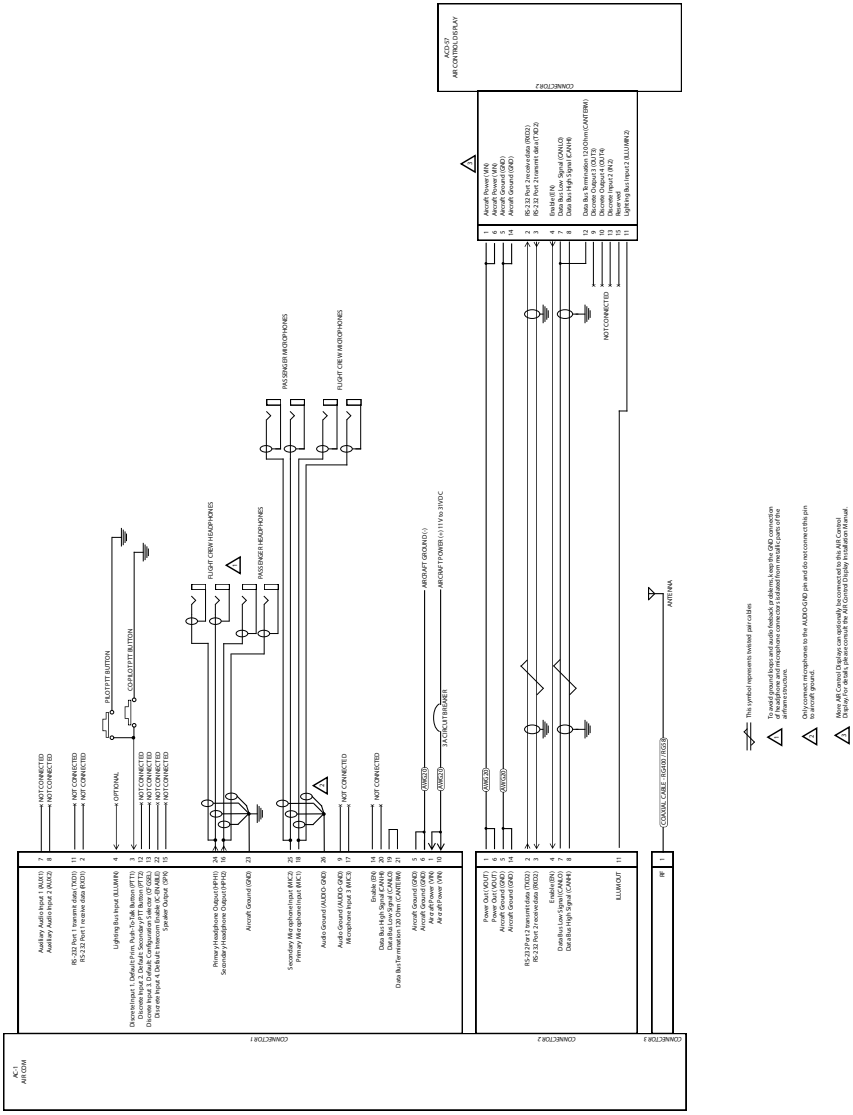

Figure B.2.: Wiring recommendation for a four-seat aircraft using headphones.

B.2.1 Parameters for a four-seat aircraft.

The following table holds parameters for a four-seat aircraft to be set up in a connected ACD-57 in the ACD configuration menu under *MENU → COM SYSTEM → INSTALLATION*.

Please note that to access this menu, the PIN CODE 3000 has to be entered into the ACD-57 first under *MENU → PIN CODE*.

Parameter	*Recommended Value*
AUDIO CFG 1 → INPUT 1 → SOURCE	MIC1
AUDIO CFG 1 → INPUT 1 → MIC GAIN	Ca. 15-25dB - tuned to the microphone's requirements
AUDIO CFG 1 → INPUT 1 → MIC SUPPLY	ON
AUDIO CFG 1 → INPUT 2 → SOURCE	MIC2
AUDIO CFG 1 → INPUT 2 → MIC GAIN	Ca. 15-25dB - tuned to the microphone's requirements
AUDIO CFG 1 → INPUT 2 → MIC SUPPLY	ON
AUDIO CFG 1 → SPK ENABLE	SPK OFF
AUDIO CFG 2 → INPUT 1 → SOURCE	NONE
AUDIO CFG 2 → INPUT 1 → MIC GAIN	–
AUDIO CFG 2 → INPUT 1 → MIC SUPPLY	OFF
AUDIO CFG 2 → INPUT 2 → SOURCE	NONE
AUDIO CFG 2 → INPUT 2 → MIC GAIN	–
AUDIO CFG 2 → INPUT 2 → MIC SUPPLY	OFF
AUDIO CFG 2 → SPK ENABLE	SPK OFF
INTERCOM → IC ENABLE	ON
INTERCOM → IC ISOLATION	OFF
DISCR INPUTS → DIN1 FUNC	PTT1
DISCR INPUTS → DIN1 POL	ACT LOW
DISCR INPUTS → DIN2 FUNC	NONE
DISCR INPUTS → DIN2 POL	ACT LOW
DISCR INPUTS → DIN3 FUNC	NONE
DISCR INPUTS → DIN3 POL	ACT LOW
DISCR INPUTS → DIN4 FUNC	NONE
DISCR INPUTS → DIN4 POL	ACT LOW
DISCR INPUTS → PTT MODE	SINGLE

B.3 Single-seat glider with a dynamic microphone

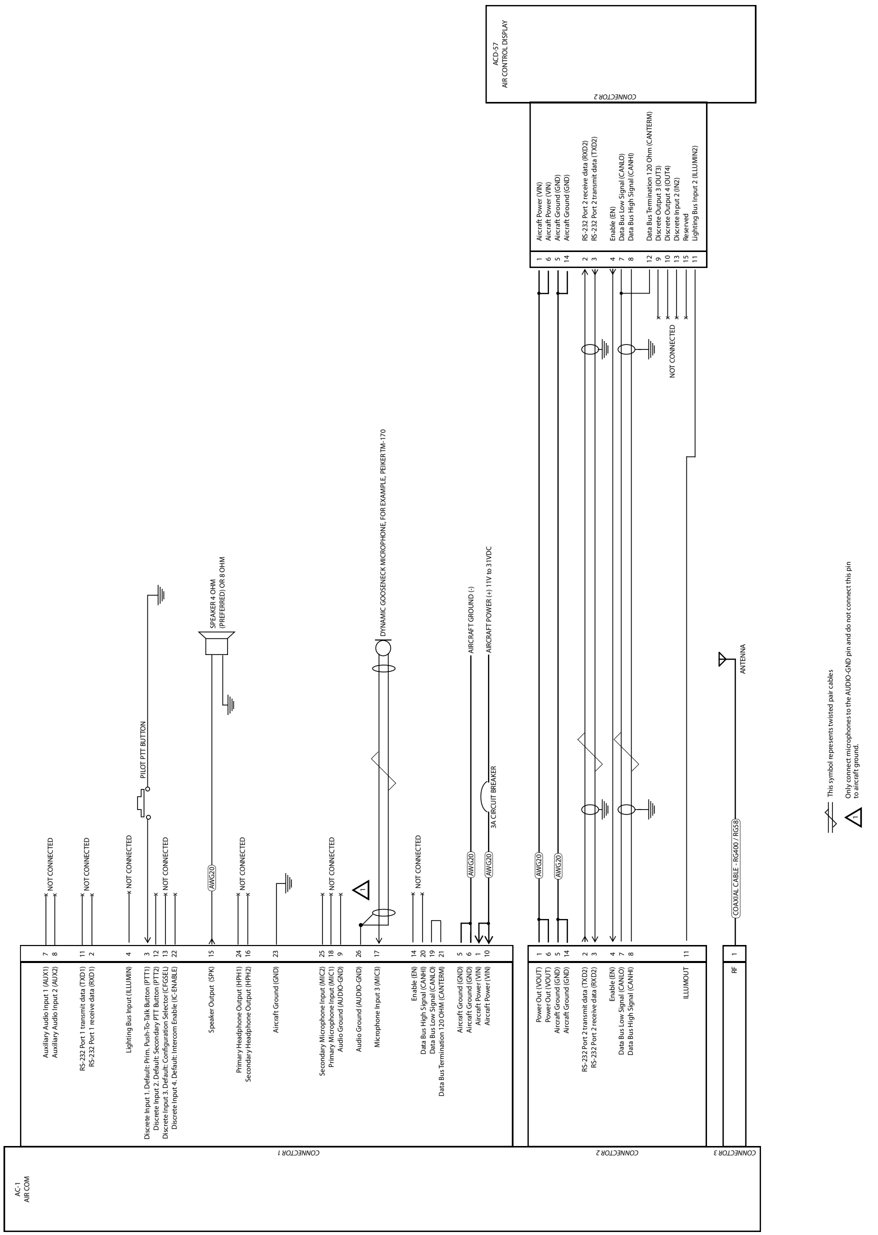

Figure B.3.: Wiring recommendation for a single-seat glider using a dynamic microphone

B.3.1 Parameters for a single-seat glider with dynamic microphone

The following table holds parameters for a single-seat glider configuration to be set up in a connected ACD-57 in the ACD configuration menu under *MENU → COM SYSTEM → INSTALLATION*.

Please note that to access this menu, the PIN CODE 3000 has to be entered into the ACD-57 first under *MENU → PIN CODE*.

Parameter	*Recommended Value*
AUDIO CFG 1 → INPUT 1 → SOURCE	MIC3
AUDIO CFG 1 → INPUT 1 → MIC GAIN	Ca. 45dB - tuned to the microphone's requirements
AUDIO CFG 1 → INPUT 1 → MIC SUPPLY	OFF
AUDIO CFG 1 → INPUT 2 → SOURCE	NONE
AUDIO CFG 1 → INPUT 2 → MIC GAIN	Any value (Input 2 not used)
AUDIO CFG 1 → INPUT 2 → MIC SUPPLY	OFF
AUDIO CFG 1 → SPK ENABLE	SPK ON
AUDIO CFG 2 → INPUT 1 → SOURCE	NONE
AUDIO CFG 2 → INPUT 1 → MIC GAIN	–
AUDIO CFG 2 → INPUT 1 → MIC SUPPLY	OFF
AUDIO CFG 2 → INPUT 2 → SOURCE	NONE
AUDIO CFG 2 → INPUT 2 → MIC GAIN	–
AUDIO CFG 2 → INPUT 2 → MIC SUPPLY	OFF
AUDIO CFG 2 → SPK ENABLE	SPK OFF
INTERCOM → IC ENABLE	OFF
INTERCOM → IC ISOLATION	OFF
DISCR INPUTS → DIN1 FUNC	PTT1
DISCR INPUTS → DIN1 POL	ACT LOW
DISCR INPUTS → DIN2 FUNC	NONE
DISCR INPUTS → DIN2 POL	ACT LOW
DISCR INPUTS → DIN3 FUNC	NONE
DISCR INPUTS → DIN3 POL	ACT LOW
DISCR INPUTS → DIN4 FUNC	NONE
DISCR INPUTS → DIN4 POL	ACT LOW
DISCR INPUTS → PTT MODE	BOTH

B.4 Double-seat glider with dynamic microphones

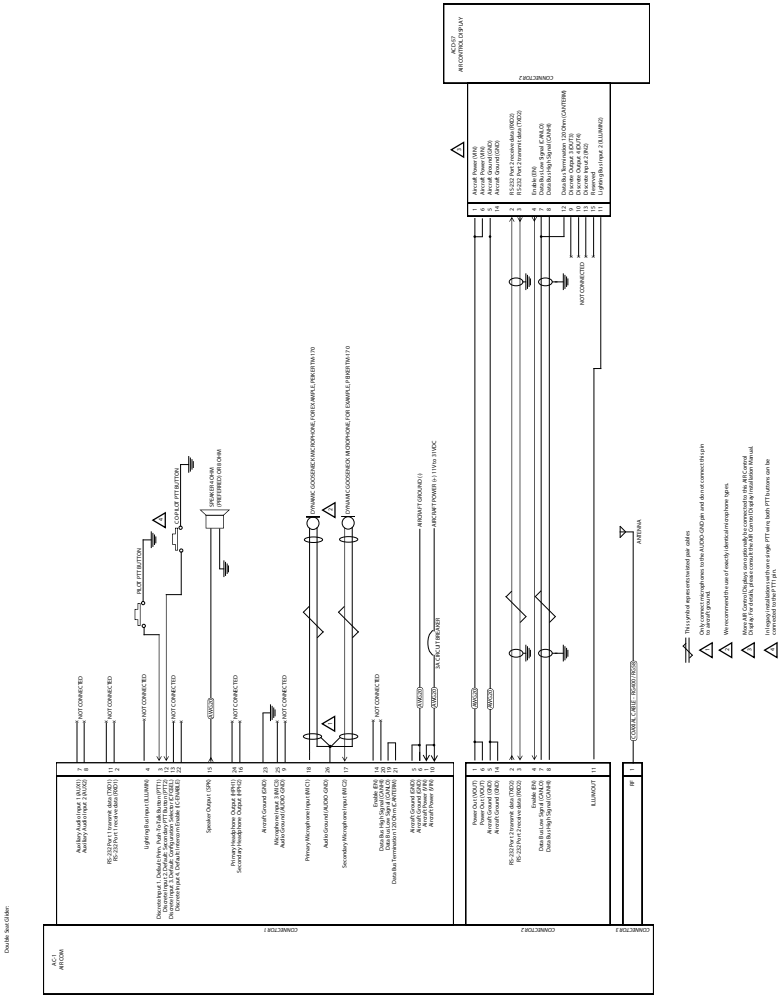

Figure B.4.: Wiring recommendation for a double-seat glider setup using dynamic microphones

B.4.1 Parameters for a double-seat glider with dynamic microphones

The following table holds parameters for a double-seat glider configuration to be set up in a connected ACD-57 in the ACD configuration menu under *MENU → COM SYSTEM → INSTALLATION*.

Please note that to access this menu, the PIN CODE 3000 has to be entered into the ACD-57 first under *MENU → PIN CODE*.

Parameter	*Recommended Value*
AUDIO CFG 1 → INPUT 1 → SOURCE	MIC1
AUDIO CFG 1 → INPUT 1 → MIC GAIN	Ca. 45dB - tuned to the microphone's requirements
AUDIO CFG 1 → INPUT 1 → MIC SUPPLY	OFF
AUDIO CFG 1 → INPUT 2 → SOURCE	MIC2
AUDIO CFG 1 → INPUT 2 → MIC GAIN	Ca. 45dB - tuned to the microphone's requirements
AUDIO CFG 1 → INPUT 2 → MIC SUPPLY	OFF
AUDIO CFG 1 → SPK ENABLE	SPK ON
AUDIO CFG 2 → INPUT 1 → SOURCE	NONE
AUDIO CFG 2 → INPUT 1 → MIC GAIN	–
AUDIO CFG 2 → INPUT 1 → MIC SUPPLY	OFF
AUDIO CFG 2 → INPUT 2 → SOURCE	NONE
AUDIO CFG 2 → INPUT 2 → MIC GAIN	–
AUDIO CFG 2 → INPUT 2 → MIC SUPPLY	OFF
AUDIO CFG 2 → SPK ENABLE	SPK OFF
INTERCOM → IC ENABLE	OFF
INTERCOM → IC ISOLATION	OFF
DISCR INPUTS → DIN1 FUNC	PTT1
DISCR INPUTS → DIN1 POL	ACT LOW
DISCR INPUTS → DIN2 FUNC	PTT2
DISCR INPUTS → DIN2 POL	ACT LOW
DISCR INPUTS → DIN3 FUNC	NONE
DISCR INPUTS → DIN3 POL	ACT LOW
DISCR INPUTS → DIN4 FUNC	NONE
DISCR INPUTS → DIN4 POL	ACT LOW
DISCR INPUTS → PTT MODE	SINGLE

B.5 Double-seat motorglider with dynamic microphones and headsets

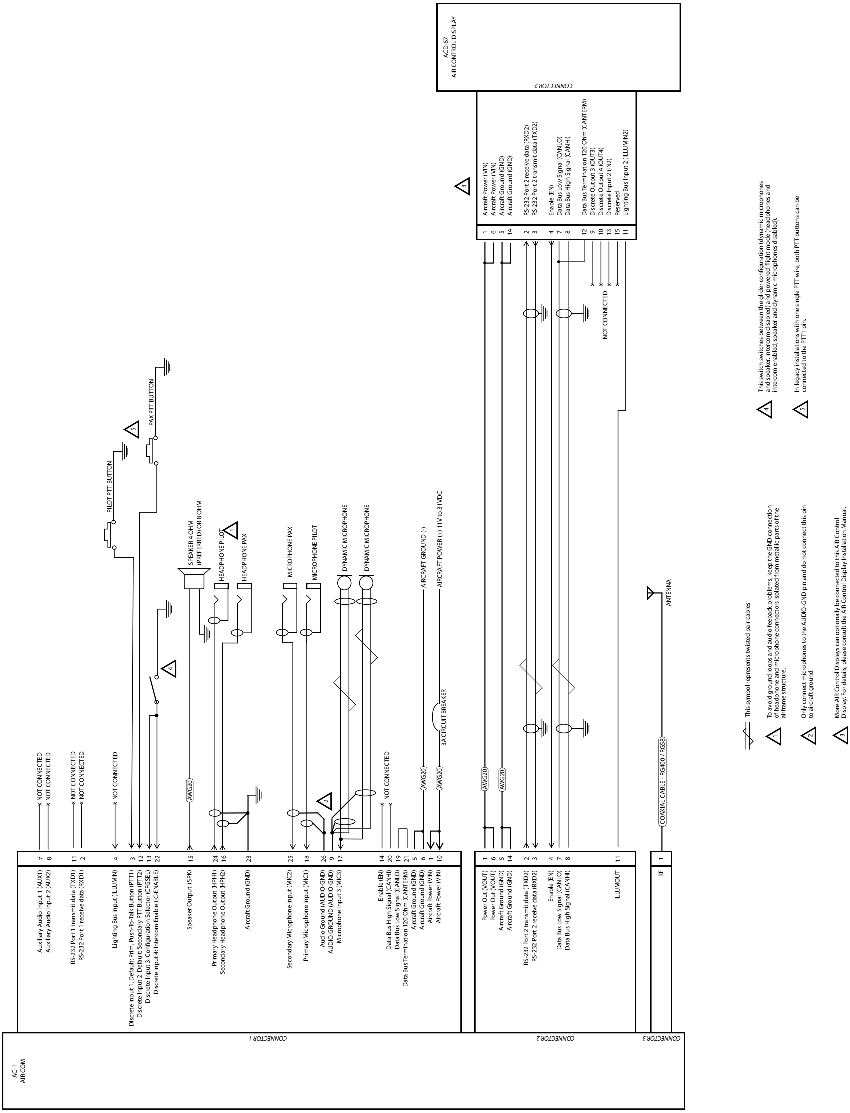

Figure B.5.: Wiring recommendation for a double-seat motorglider setup using both, dynamic microphones and headets depending on flight mode.

B.5.1 Parameters for a double-seat motorglider with dynamic microphones and headsets

The following table holds parameters for a double-seat motorglider configuration to be set up in a connected ACD-57 in the ACD configuration menu under *MENU → COM SYSTEM → INSTALLATION*.

Please note that to access this menu, the PIN CODE 3000 has to be entered into the ACD-57 first under *MENU → PIN CODE*.

Parameter	*Recommended Value*
AUDIO CFG 1 → INPUT 1 → SOURCE	MIC3
AUDIO CFG 1 → INPUT 1 → MIC GAIN	Ca. 45dB - tuned to the microphone's requirements
AUDIO CFG 1 → INPUT 1 → MIC SUPPLY	OFF
AUDIO CFG 1 → INPUT 2 → SOURCE	MIC3
AUDIO CFG 1 → INPUT 2 → MIC GAIN	Ca. 45dB - tuned to the microphone's requirements
AUDIO CFG 1 → INPUT 2 → MIC SUPPLY	OFF
AUDIO CFG 1 → SPK ENABLE	SPK ON
AUDIO CFG 2 → INPUT 1 → SOURCE	MIC1
AUDIO CFG 2 → INPUT 1 → MIC GAIN	Ca. 15-25dB - tuned to the microphone's requirements
AUDIO CFG 2 → INPUT 1 → MIC SUPPLY	ON
AUDIO CFG 2 → INPUT 2 → SOURCE	MIC2
AUDIO CFG 2 → INPUT 2 → MIC GAIN	Ca. 15-25dB - tuned to the microphone's requirements
AUDIO CFG 2 → INPUT 2 → MIC SUPPLY	ON
AUDIO CFG 2 → SPK ENABLE	SPK OFF
INTERCOM → IC ENABLE	DIN
INTERCOM → IC ISOLATION	OFF
DISCR INPUTS → DIN1 FUNC	PTT1
DISCR INPUTS → DIN1 POL	ACT LOW
DISCR INPUTS → DIN2 FUNC	PTT2
DISCR INPUTS → DIN2 POL	ACT LOW
DISCR INPUTS → DIN3 FUNC	IC ENABLE
DISCR INPUTS → DIN3 POL	ACT LOW
DISCR INPUTS → DIN4 FUNC	AUDIO CFG SEL
DISCR INPUTS → DIN4 POL	ACT LOW
DISCR INPUTS → PTT MODE	SINGLE

The mode of operation, either dynamic microphones and speaker, or headphones and standard mics can be selected in-flight using the AUDIO CFG SEL switch. Additionally the intercom function is enabled using the IC ENABLE switch. Both inputs can be switched by a single toggle switch.

Certification Documents C

C.1 Continued Airworthiness

AC-1 has been designed to allow “on condition” maintenance. Other than the periodic functional checks required by regulations, no periodic maintenance schedule is required to maintain continued airworthiness.

C.2 ETSO Certification Number

EASA.21O.10075458 is the approval number of the AIR COM AC-1.

C.3 Environmental Qualification Form

Nomenclature:
AIR Avionics AIR COM VHF Transceiver

Type/Model/Part No:
VHF Transceiver/AIR COM/AC-1

TSO Numbers:
ETSO-2C169a, ETSO-2C128

Manufacturer’s Specification And/Or Other Applicable Specification:
See section 1.4.3.

Manufacturer:
Garrecht Avionik GmbH

Address:
Garrecht Avionik GmbH
Alfred-Nobel-Str. 2d
55411 Bingen / Germany

Revision & Change Number of DO-160:
G Change 0

Date Tested:
03 Jan 2020 to 04 Feb 2020

Description	*Section*	*Category*	*Conditions*
Temperature / Altitude	4.0	C4	
Low Ground Survival Temperature	4.5.1	C4	-55°C
Low Short-Time Operating Temperature	4.5.1	C4	-30°C
Low Operating Temperature	4.5.2	C4	-30°C
High Ground Survival Temperature	4.5.3	C4	+85°C
High Short-Time Operating Temperature	4.5.3	C4	+70°C
High Operating Temperature	4.5.4	C4	+55°C
In-Flight Loss of Cooling	4.5.5	Z	No auxiliary cooling required
Altitude	4.6.1	C4	35,000 ft
Temperature Variation	5.0	C	2°C / minute
Humidity	6.0	A	
Shock	7.0	B	6 G operational, 20 G crash safety
Vibration	8.0	U2	Vibration curve F/F1
		S	Vibration curve M
Explosion Proofness	9.0	X	not tested
Water Proofness	10.0	X	not tested
Fluids Susceptibilities	11.0	X	not tested
Sand and Dust	12.0	X	not tested
Fungus Resistance	13.0	X	not tested
Salt Spray	14.0	X	not tested
Magnetic Effect	15.0	Z	Less than 0.3m
Power Input (DC)	16.0	B	
Voltage Spike Conducted	17.0	B	
Audio Frequency Conducted Susceptibility	18.0	B	
Induced Signal Susceptibility	19.0	BC	
Radio Frequency Susceptibility	20.0	Q	Radiated Susceptibility
		Q	Conducted Susceptibility
Emission of RF	21.0	M	
Lightning Induced Transient Susceptibility	22.0	ZZXXXX	No tests required by ED-23C
Lightning Direct Effects	23.0	X	not tested
Icing	24.0	X	not tested
Electrostatic Discharge (ESD)	25.0	X	not tested
Flammability	26.0	C	not tested (metal enclosure, not vent holes)

Cat X: Not tested as no test is required explicitly by the MPS or no use in such environment is intended.

Configuration Menu Diagram

D

This diagram shows the AC-1 configuration menu in an AIR Control Display 57 (ACD-57).

This diagram shows the configuration menu for the AC-1 in an Air Control Display. To view the "INSTALLATION" menu levels, the pin code 3000 has to be entered in the AIR Control Display in the *CONFIGURATION MENU → PIN CODE*

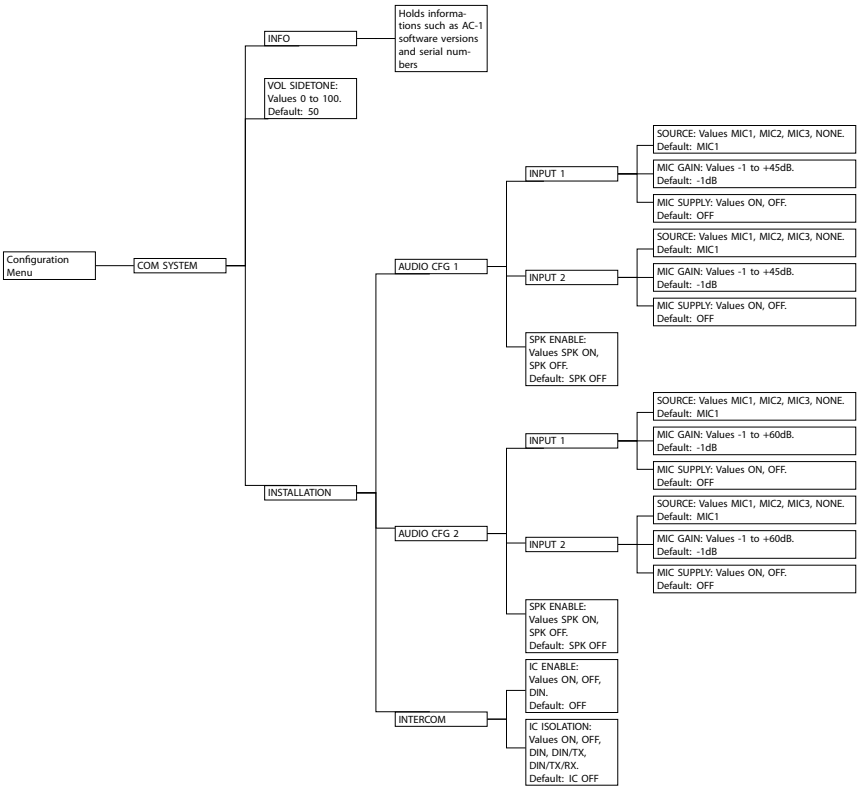

To be continued on the following page.

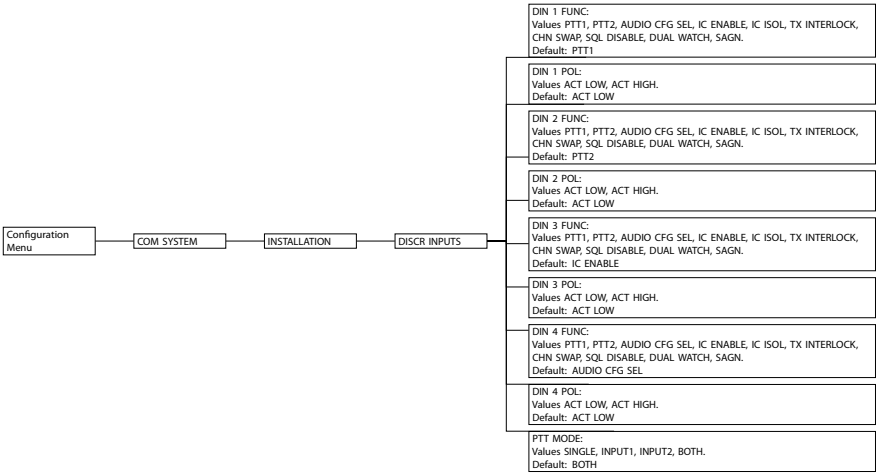
Configuration Menu
COM SYSTEM
INSTALLATION
DISCR INPUTS
DIN 1 FUNC:
Values PTT1, PTT2, AUDIO CFG SEL, IC ENABLE, IC ISOL, TX INTERLOCK, CHN SWAP, SQL DISABLE, DUAL WATCH, SAGN.
Default: PTT1
DIN 1 POL:
Values ACT LOW, ACT HIGH.
Default: ACT LOW
DIN 2 FUNC:
Values PTT1, PTT2, AUDIO CFG SEL, IC ENABLE, IC ISOL, TX INTERLOCK, CHN SWAP, SQL DISABLE, DUAL WATCH, SAGN.
Default: PTT2
DIN 2 POL:
Values ACT LOW, ACT HIGH.
Default: ACT LOW
DIN 3 FUNC:
Values PTT1, PTT2, AUDIO CFG SEL, IC ENABLE, IC ISOL, TX INTERLOCK, CHN SWAP, SQL DISABLE, DUAL WATCH, SAGN.
Default: IC ENABLE
DIN 3 POL:
Values ACT LOW, ACT HIGH.
Default: ACT LOW
DIN 4 FUNC:
Values PTT1, PTT2, AUDIO CFG SEL, IC ENABLE, IC ISOL, TX INTERLOCK, CHN SWAP, SQL DISABLE, DUAL WATCH, SAGN.
Default: AUDIO CFG SEL
DIN 4 POL:
Values ACT LOW, ACT HIGH.
Default: ACT LOW
PTT MODE:
Values SINGLE, INPUT1, INPUT2, BOTH.
Default: BOTH

Configuration Log E

E.1 Audio Configuration

AUDIO CONFIG 1 → INPUT 1 → SOURCE : _____

AUDIO CONFIG 1 → INPUT 1 → MIC GAIN: _____

AUDIO CONFIG 1 → INPUT 1 → MIC SUPPLY: _____

AUDIO CONFIG 1 → INPUT 2 → SOURCE : _____

AUDIO CONFIG 1 → INPUT 2 → MIC GAIN: _____

AUDIO CONFIG 1 → INPUT 2 → MIC SUPPLY: _____

AUDIO CONFIG 1 → SPK ENABLE: _____

AUDIO CONFIG 2 → INPUT 1 → SOURCE : _____

AUDIO CONFIG 2 → INPUT 1 → MIC GAIN: _____

AUDIO CONFIG 2 → INPUT 1 → MIC SUPPLY: _____

AUDIO CONFIG 2 → INPUT 2 → SOURCE : _____

AUDIO CONFIG 2 → INPUT 2 → MIC GAIN: _____

AUDIO CONFIG 2 → INPUT 2 → MIC SUPPLY: _____

AUDIO CONFIG 2 → SPK ENABLE: _____

E.2 Intercom

INTERCOM → IC ENABLE: _____

INTERCOM → IC ISOLATION: _____

E.3 Discrete Inputs

DISCR INPUTS → DIN1 FUNC: _____

DISCR INPUTS → DIN1 POL: _____

DISCR INPUTS → DIN2 FUNC: _____

DISCR INPUTS → DIN2 POL: _____

DISCR INPUTS → DIN3 FUNC: _____

DISCR INPUTS → DIN3 POL: _____

DISCR INPUTS → DIN4 FUNC: _____

DISCR INPUTS → DIN4 POL: _____

DISCR INPUTS → PTT MODE: _____

Checkout Log F

F.1 Installation

1. ☐ The installation has been performed in accordance with the instrcutions shown in this manual.
2. ☐ Wiring checks have been performed.
3. ☐ Connector Engagement Checks have been performed.

F.2 Ground Checks

1. ☐ Data Bus Checks have been performed.
2. ☐ VHF COM Check has been performed.
3. ☐ Serial Data Interface Checks have been performed.
4. ☐ Version Check has been performed.

F.3 Interference Checks

1. ☐ EMI test and check for interference has been performed.

F.4 Documentation

1. ☐ Aircraft documentation updated.
2. ☐ All documentation, including this log and the configuration log has been documented and stored.

I hereby confirm the above mentioned steps have been completed and that no issues, problems or failures have been found.

Name, Date, Signature _____