Smart Ring Even R1 Quick Guide

Getting started / Wearing method / Charging / Ring description
Démarrage / Méthode de port / Chargement / Description de la bague
Los geht's / Tragemethode / Laden / Ringbeschreibung
Per Iniziare / Modalità d'uso / Ricarica / Descrizione dell'anello
Introducción / Método de uso / Cargando / Descripción del anillo
Início rápido / Método de uso / Carregamento / Descrição do anel
入门指南 / 佩戴方式 / 充电说明 / 戒指说明
スタートす / 装着方法 / 充電 / リングの説明
시작하기 / 착용 방법 / 충전 / 링 설명
البدء / طريقة الارتداء / الشحن / وصف الخاتم

Getting started

Step 1

Plug the charger into a power source.

Insérez le chargeur dans une prise électrique.

Das Ladegerät an eine Stromquelle anschließen.

Collegare il caricatore a una fonte di alimentazione.

Enchufa el cargador a una fuente de alimentación.

Conecte o carregador a uma fonte de energia.

将充电器插入电源。

充電器を電源に接続してください。

충전기를 전원에 연결해 주세요 .

قم بتوصيل الشاحن بمصدر الطاقة.

Step 2

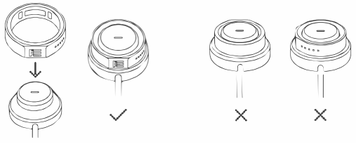

Magnetically attach Even R1 to the charger with the logo facing the cable. Charge for 5-10 seconds to activate.

Attachez magnétiquement Even R1 au chargeur avec son logo face au câble. Chargez la pour 5 à 10 secondes pour l'activer.

Even R1 magnetisch am Ladegerät befestigen, so dass das Logo zum Kabel zeigt. Zum Aktivieren 5-10 Sekunden lang aufladen.

Attaccare magneticamente Even R1 al caricatore con il logo rivolto verso il cavo. Caricare per 5-10 secondi per attivarlo.

Conecte magnéticamente Even R1 al cargador con el logotipo orientado hacia el cable. Cargue durante 5-10 segundos para activar.

Anexe magneticamente o Even R1 ao carregador com o logotipo voltado para o cabo. Carregue por 5–10 segundos para ativar.

将 Even R1 带有标识的一面朝向充电线，通过磁吸方式吸附至充电器。充电 5-10 秒即可激活设备。

ロゴがケーブル側を向いた状態で、Even R1 を充電器に磁力で取り付けてください。5-10 秒間充電して起動させてください。

Even R1 의 로고가 케이블 방향을 향하도록 자력으로 충전기에 부착해 주세요 . 제품 활성화를 위해 5-10 초간 충전합니다 .

قم بتوصيل Even R1 مغناطيسيًا بالشاحن بحيث يكون الشعار مواجهًا للكابل. اشحن لمدة 5-10 ثواني لتنشيط.

Step 3

Download the Even Realities App. Follow the instructions in the Even Realities App to set up Even R1.

Téléchargez l'application Even Realities. Suivez les instructions dans l'application Even Realities pour installer Even R1.

Die App von Even Realities herunterladen. Den Anweisungen in der App von Even Realities folgen, um Even R1 einzurichten.

Scaricare l'app Even Realities. Seguire le istruzioni nell'app Even Realities per configurare Even R1.

Descarga la Aplicación Even Realities. Sigue las instrucciones de la Aplicación Even Realities para configurar Even R1.

Baixe o aplicativo Even Realities. Siga as instruções no aplicativo Even Realities para configurar o Even R1.

下载 Even Realities 应用程序。按照 Even Realities 应用程序内的指引完成 Even R1 的设置。

Even Realities アプリをダウンロードしてください。Even Realities アプリ内の取り扱い案内に従って、Even R1 をセットアップしてください。

Even Realities 앱을 다운로드하십시오 . Even Realities 앱의 안내에 따라 Even R1 을 설정해 주세요 .

قم بتنزيل تطبيق Even Realities. اتبع التعليمات في تطبيق Even Realities لإعداد Even R1.

Wearing method

Place Even R1 on your index finger, with the logo facing up and the TouchPad on the thumb side.

Placez Even R1 sur votre index, avec son logo vers le haut et TouchPad du côté du pouce.

Even R1 auf Ihren Zeigefinger legen, wobei das Logo nach oben und das TouchPad auf die Daumenseite zeigt.

Posizionare Even R1 sull'indice, con il logo rivolto verso l'alto e il TouchPad sul lato del pollice.

Coloque Even R1 en su dedo índice, con el logotipo hacia arriba y el Panel Táctil en el lado del pulgar.

Coloque o Even R1 no dedo indicador, com o logotipo voltado para cima e o TouchPad do lado do polegar.

将 Even R1 佩戴于食指，确保标识面朝上，且触控板位于拇指一侧。

ロゴを上向きにして、タッチパッドを親指側に向いた状態で、Even R1 を人差し指に装着してください。

Even R1 을 집게손가락에 착용할 때는 로고가 위쪽을 향하게 하고 ,터치패드가 엄지손가락 쪽에 위치하도록 해 주세요 .

ضع Even R1 على إصبع السبابة، بحيث يكون الشعار متجهًا للأعلى ولوحة اللمس على جانب الإبهام.

Smart Ring Charger

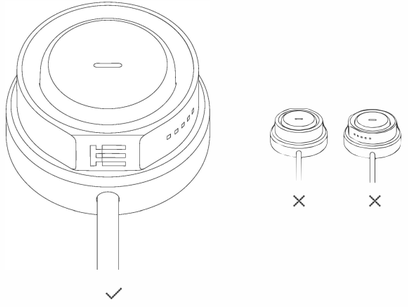

When you insert Even R1, the indicator light confirms charging by turning white for three seconds.

Lorsque vous insérez l'Even R1, le témoin lumineux devient blanc pendant trois secondes pour confirmer la mise en charge.

Wenn Sie den Even R1 einsetzen, leuchtet die Kontrollleuchte drei Sekunden lang weiß, um den Ladevorgang zu bestätigen.

Quando si inserisce l'Even R1, la spia luminosa si accende di bianco per tre secondi per confermare la ricarica.

Al insertar el Even R1, el indicador se ilumina en blanco durante tres segundos para confirmar la carga.

Ao inserir o Even R1, a luz indicadora acende em branco por três segundos para confirmar o carregamento.

插入 Even R1 时，指示灯会亮白色三秒，以确认正在充电。

Even R1 を挿入すると、インジケーターライトが白く 3 秒間点灯し、充電が開始されたことを示します。

Even R1 을 삽입하면 표시등이 흰색으로 3 초간 켜져 충전이 시작되었음을 나타냅니다 .

عند إدخال جهاز Even R1، يضيء المؤشر باللون الأبيض لمدة ثلاث ثوانٍ لتأكيد بدء الشحن.

Ring description

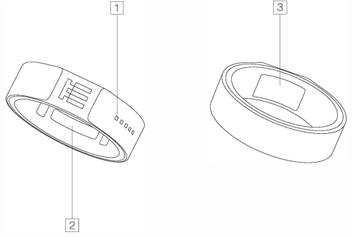

1 TouchPad
2 PPG Sensor
3 Wireless Charging Area

1 TouchPad
2 PPG-Sensor
3 Bereich für kabelloses Laden

1 Panel Táctil
2 Sensor PPG
3 Área de carga inalámbrica

1 触控板
2 PPG 传感器
3 无线充电区

1 터치패드
2 PPG 센서
3 무선 충전 영역

1 Touchpad
2 Senseur PPG
3 Zone de chargement sans fil

1 TouchPad
2 Sensore PPG
3 Area di ricarica wireless

1 Touchpad
2 Sensor PPG
3 Área de carregamento sem fio

1 タッチパッド
2 PPG センサー
3 ワイヤレス充電エリア

1 لوحةاللمس
2 مستشعر PPG
3 منطقةالشحن اللاسلكي

Use the TouchPad to scroll up and down, single tap, double tap, and long press.

Servez-vous de TouchPad pour la navigation de haut en bas, la simple touche, la double touche et la touche prolongée.

Das TouchPad verwenden, um nach oben und unten zu blättern, einfach zu tippen, doppelt zu tippen und lange gedrückt zu halten.

Utilizzare il TouchPad per scorrere in alto e in basso, fare un singolo tocco, doppio tocco o tocco prolungato.

Utiliza el Panel Táctil para desplazarse hacia arriba y abajo, hacer clic, doble clic y mantener pulsado.

Use o TouchPad para rolar para cima e para baixo, toque único, toque duplo e pressão longa.

触控板支持上下滑动、单击、双击及长按等操作。

上下にスクロール、シングルタップ、ダブルタップ、長押しの操作は、タッチパッドで行えます。

터치패드를 통해 위아래 스크를 , 한 번 탭 , 두 번 탭 , 길게 누르기 등의 동작을 수행할 수 있습니다 .

استخدم لوحة اللمس للتمرير لأعلى ولأسفل، والنقر مرة واحدة، والنقر المزدوج، والضغط المطول.

FCC Caution: Any changes or modifications not expressly approved by the party responsible for compliance could void the user's authority to operate this equipment.

This device complies with part 15 of the FCC Rules. Operation is subject to the following two conditions:

(1) this device may not cause harmful interference, and
(2) this device must accept any interference received, including interference that may cause undesired operation.
This device and its antenna(s) must not be co-located or operating in conjunction with any other antenna or transmitter.

NOTE: This equipment has been tested and found to comply with the limits for a Class B digital device, pursuant to Part 15 of the FCC Rules. These limits are designed to provide reasonable protection against harmful interference in a residential installation. This equipment generates, uses and can radiate radio frequency energy and, if not installed and used in accordance with the instructions, may cause harmful interference to radio communications. However, there is no guarantee that interference will not occur in a particular installation.
If this equipment does cause harmful interference to radio or television reception,
which can be determined by turning the equipment off and on, the user is encouraged to try to correct the interference by one or more of the following measures:
-- Reorient or relocate the receiving antenna.
-- Increase the separation between the equipment and receiver.
-- Connect the equipment into an outlet on a circuit different from that to which the receiver is connected.
-- Consult the dealer or an experienced radio/TV technician for help.

The device has been evaluated to meet general RF exposure requirement. The device can be used in portable exposure condition without restriction

FCC ID: 2BFKR-R1

IC Caution：
EN
This device contains licence-exempt transmitter(s)/ receiver(s) that comply with Innovation, Science and Economic Development Canada's licence-exempt RSS(s). Operation is subject to the following two conditions:

1.This device may not cause interference.
2.This device must accept any interference, including interference that may cause undesired operation of the device.
FR
L'émetteur/récepteur exempt de licence contenu dans le présent appareil est conforme aux CNR d'Innovation, Sciences et Développement économique Canada applicables aux appareils radio exempts de licence. L'exploitation est autorisée aux deux conditions suivantes :

1.L'appareil ne doit pas produire de brouillage;
2.L'appareil doit accepter tout brouillage radioélectrique subi, même si le brouillage est susceptible d'en compromettre le fonctionnement.

The device has been evaluated to meet general RF exposure requirement. The device can be used in portable exposure condition without restriction.
L'appareil a été évalué et s'avère conforme aux exigences générales d'exposition aux radiofréquences. Il peut être utilisé en conditions d'exposition portable sans restriction.

CE Caution：

1.Use careful with the earphone maybe possible excessive sound pressurefrom earphones and headphones can cause hearing loss.
2. CAUTION: RISK OF EXPLOSION IF BATTERY IS REPLACED BYAN INCORRECT TYPE. DISPOSE OF USED BATTERIES ACCORDINGTO THE INSTRUCTIONS.
3. The product shall only be connected to a USB interface of version USB2.0.
4. Adapter shall be installed near the equipment and shall be easily accessible.
5. Operation temperature:-10~40 C.
6. The plug considered as disconnect device of adapter.
7. Accessories information:

Adapter: N/A

Battery: Ring:
Cell 1): JL136235 3.8V,21mAh, 79.8mWh
Cell 2): JL136228 3.8V,16mAh, 60.8mwh

This information has to be presented in such a way that the user can readily understand it. Typically, this will necessitate translation into every local language (required by national consumer laws) of the markets where the equipment is intended to be sold. Illustrations, pictograms and using international abbreviations for country names may help reduce the need for translation.

EU Declaration of Conformity
We, Even Realities Ltd.(Building West 2603, LEPU TOWER, Nanshan District, Shenzhen, 518055 China) hereby declares that this Smart Ring is in compliance with the essential requirements and other relevant provisions of Directive 2014/53/EU. According to Article 10(2) of Directive 2014/53/EU, the Smart Ring can be used in Europe without restriction.

Smart Ring Charger

Model Name：Even R1 Charger
Operation Frequency:13.56MHz
Modulation Type:ASK
Number Of Channel：1CH.
Antenna Designation:Induction coil

FCC Caution: Any changes or modifications not expressly approved by the party responsible for compliance could void the user's authority to operate this equipment.

This device complies with part 15 of the FCC Rules. Operation is subject to the following two conditions:

(1) this device may not cause harmful interference, and
(2) this device must accept any interference received, including interference that may cause undesired operation.
This device and its antenna(s) must not be co-located or operating in conjunction with any other antenna or transmitter.

NOTE: This equipment has been tested and found to comply with the limits for a Class B digital device, pursuant to Part 15 of the FCC Rules. These limits are designed to provide reasonable protection against harmful interference in a residential installation. This equipment generates, uses and can radiate radio frequency energy and, if not installed and used in accordance with the instructions, may cause harmful interference to radio communications. However, there is no guarantee that interference will not occur in a particular installation.
If this equipment does cause harmful interference to radio or television reception,
which can be determined by turning the equipment off and on, the user is encouraged to try to correct the interference by one or more of the following measures:
-- Reorient or relocate the receiving antenna.
-- Increase the separation between the equipment and receiver.
-- Connect the equipment into an outlet on a circuit different from that to which the receiver is connected.
-- Consult the dealer or an experienced radio/TV technician for help.

This equipment complies with Canada radiation exposure limits set forth for an uncontrolled environment. This equipment should be installed and operated with minimum distance 20cm between the radiator & your body.

FCC ID: 2BFKR-R1C

IC Caution：
EN
This device contains licence-exempt transmitter(s)/ receiver(s) that comply with Innovation, Science and Economic Development Canada's licence-exempt RSS(s). Operation is subject to the following two conditions:

1.This device may not cause interference.
2.This device must accept any interference, including interference that may cause undesired operation of the device.
FR
L'émetteur/récepteur exempt de licence contenu dans le présent appareil est conforme aux CNR d'Innovation, Sciences et Développement économique Canada applicables aux appareils radio exempts de licence. L'exploitation est autorisée aux deux conditions suivantes :

1.L'appareil ne doit pas produire de brouillage;
2.L'appareil doit accepter tout brouillage radioélectrique subi, même si le brouillage est susceptible d'en compromettre le fonctionnement.

Radiation Exposure Statement
This equipment complies with Canada radiation exposure limits set forth for an uncontrolled environment. This equipment should be installed and operated with minimum distance 20cm between the radiator & your body.
Déclaration d'exposition aux radiations
Cet équipement est conforme Canada limites d'exposition aux radiations dans un environnement non contrôlé. Cet équipement doit être installé et utilisé à distance minimum de 20cm entre le radiateur et votre corps.

How to find smart ring's label information

Scan the QR codeon the Smart ring, the will show label:

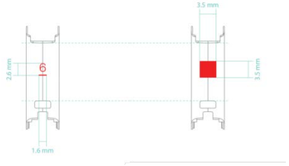
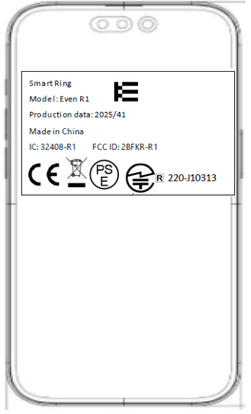
Note:The red numeric area is the left inner side, and the red rectangular area is the right inner side. Red rectangle for the qr code location and size