JYD-C18 Wireless Earphone

User Manual

Welcome to JYD-C18 Multifunction Helmet Headset. Please read this manual carefully so that operation becomes easier and installation quicker and more convenient.

Product Overview:

This product is equipped with the latest 5.4 chip and adopts cutting-edge technology, delivering powerful stereo sound. It features ultra-strong signal transmission and ultra-low power consumption, and is compatible with all wireless devices. With the automatic call answering function, you no longer need to answer calls manually, ensuring safety and efficiency. It is equipped with a 40mm high-quality high-magnetic speaker.

Powering On and Off:

Press power button " ⏻ " for two to three seconds to switch device on. Indicator light will flash red and blue alternately, showing that unit is on. To switch it off, press button marked with power symbol for two to three seconds again. You will hear a prompt tone, and indicator light will remain off once device has shut down.

Switching Voice Prompts Between Chinese and English:

Once device is on, indicator light will flash red and blue alternately. Do not connect it to your mobile phone at this point. Press " ⏻ " button twice in quick succession to switch voice prompts between Chinese and English.

Answering Calls:

Incoming calls are answered automatically. You can also press call button " " to answer manually.

Connecting to a Mobile Phone:

Once device is switched on, indicator light will flash red and blue alternately. Then enable Bluetooth on your mobile phone, search for "JYD-C18", and tap to connect. Connection should be completed within a few seconds. After first pairing, headset will reconnect automatically in future, provided Bluetooth is enabled on both phone and headset.

Volume Control / Track Selection:

Use multifunction knob to control music: turn it forward once for previous track, and turn it to right once for next track.Turn and hold it forward to reduce volume gradually. Turn and hold it to right to increase volume gradually.Press middle " " button to play or pause audio, answer a call, or redial last number.

Switching on Night Ambient Lighting:

With product switched on, press " ⏻ " button once to switch on night ambient lighting. Light will stay on continuously. Each further press of " ⏻ " button changes lighting effect. Four colour modes are available.

Intercom Connection Instructions:

1: When connecting two headsets for first time, switch both units on and press "A" button once on each one to enter intercom mode. Indicator light will then change to a slow flashing green light. Next, press "A" button once more on one unit to place it in receiving mode; a prompt tone will sound. Other unit will enter transmitting mode automatically. Once connection is established, green light will remain on continuously and an intercom connection tone will be heard. Intercom conversation can then begin.

2: If the two headsets have already been paired for intercom, simply switch both units on and press "A" button once on each one to enter intercom mode. Connection will then be made automatically.

3: To disconnect intercom link, press "A" button once. This will exit intercom mode and return device to Wireless mode.

4: Once each unit has been connected separately to a mobile phone via Wireless, calls can still be answered and music can still be played while intercom mode is active. While speaking over intercom, music volume will reduce automatically. When speaking stops, volume will return to normal.

Music Sharing:

To share music between Phone A and Phone B, first enable music sharing on Phone A. Then enable same function on Phone B, and music sharing will be set up successfully.

Charging:

When battery is low, a voice prompt will remind you to recharge device. A full charge takes around 3 to 4 hours. Red indicator light remains on while charging. Once charging is complete, red light switches off.

Box Contents:

1. One helmet headset.
2. One charging cable.
3. One user manual.
4. Two spare hook-and-loop fasteners.
5. One spare microphone foam cover.

Product Specifications:

1. Chip version: V5.4+EDR
2. Frequency range: 2.402GHz-2.480GHz
3. Transmission range: over 10 m
4. Microphone range: ≤1 m
5. Lithium battery: 3.7V/1000mAh
6. Charging time: 3-4 hours
7. Standby time: approx. 100 hours
8. Continuous operating time: approx. 20 hours
9. Connection Name: JYD-C18

FCC Caution:

This device complies with part 15 of the FCC Rules. Operation is subject to the following two conditions:
(1) This device may not cause harmful interference, and (2) this device must accept any interference received, including interference that may cause undesired operation.
Any changes or modifications not expressly approved by the party responsible for compliance could void the user's authority to operate the equipment.
NOTE: This equipment has been tested and found to comply with the limits for a Class B digital device, pursuant to Part 15 of the FCC Rules. These limits are designed to provide reasonable protection against harmful interference in a residential installation. This equipment generates, uses and can radiate radio frequency energy and, if not installed and used in accordance with the instructions, may cause harmful interference to radio communications. However, there is no guarantee that interference will not occur in a particular installation.
If this equipment does cause harmful interference to radio or television reception, which can be determined by turning the equipment off and on, the user is encouraged to try to correct the interference by one or more of the following measures:
-- Reorient or relocate the receiving antenna.
-- Increase the separation between the equipment and receiver.
-- Connect the equipment into an outlet on a circuit different from that to which the receiver is connected.
-- Consult the dealer or an experienced radio/TV technician for help.
The device has been evaluated to meet general RF exposure requirement. The device can be used in portable exposure condition without restriction.

Device Layout and Function Overview:

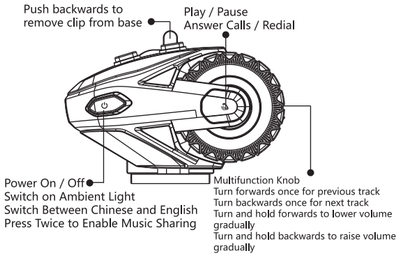

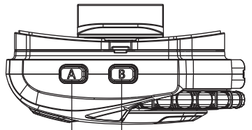

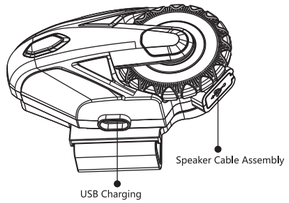

Pair and search for devices:

Figure 1:

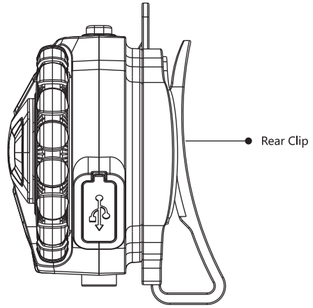

Fitting Rear Clip Base to Helmet:

Installed View:

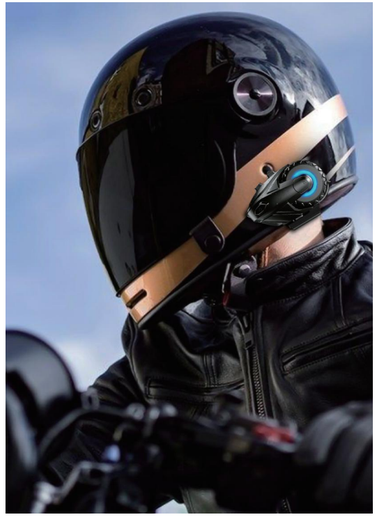

Fitting Left Speaker:

Peel white release liner from spare circular loop-side hook-and-loop pad.

Spare circular loop-side hook-and-loop pad

Peel off white release liner and attach pad to ear recess inside helmet.

Fit components as shown in image on left. Position speaker over ear area and place boom microphone in suitable position.

Fitting Right Speaker:

Peel white release liner from spare circular loop-side hook-and-loop pad.

Peel white release liner from spare circular loop-side hook-and-loop pad, then attach speaker in correct position

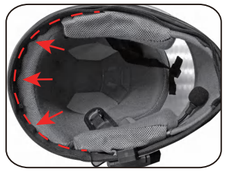

Tuck connecting cable for left and right speakers inside inner helmet lining.

Compatible with Following Products:

Suitable for Following Helmet Types:

Off-road helmet | Flip-front helmet | Open-face helmet | Full-face helmet

Precautions for Using Helmet Headset:

1. To protect your hearing, do not set volume at maximum level.
2. Do not listen to music continuously for extended periods.
3. Avoid subjecting product to impact where possible.
4. Keep product away from dust, fire, and moisture.
5. Before use outdoors, make sure battery is fully charged.