东莞市高畅电子科技有限公司

产 品 规格 书

Product specification

客　　户：
CUSTOMER：

客 户 案 号：
CUSTOMER P/N：

本 厂 编 号： **GC2.4GD3W-L350MM**
OUR MODEL NO：

品 名 / 规 格： **2.4G External small blade antenna**
SPECIFICATIONS：

样　品　数： **0**
Q' TY：

日　　期： **2023-10-27**

东莞市高畅电子科技有限公司			客户承认
工程 Engineering	品保 Quality	核准 Approved	签名（盖章）
谢工	黄工	高工	

1. Technical Specification 技术规格

A. Electrical Characteristics	
Working Frequency Range	**2400~2500MHz**
S.W.R.	**2400~2500MHz:<3.0**
Antenna Gain(avg.)	**2400~2500MHz: 2dBi±0.5dBi**
Impedance	**50ohm**
B. Material	
brass	
C. Environmental	
Operation Temperature	**-45℃~+85℃**
Storage Temperature	**-45℃~+85℃**

2. Matching Circuits 匹配电路

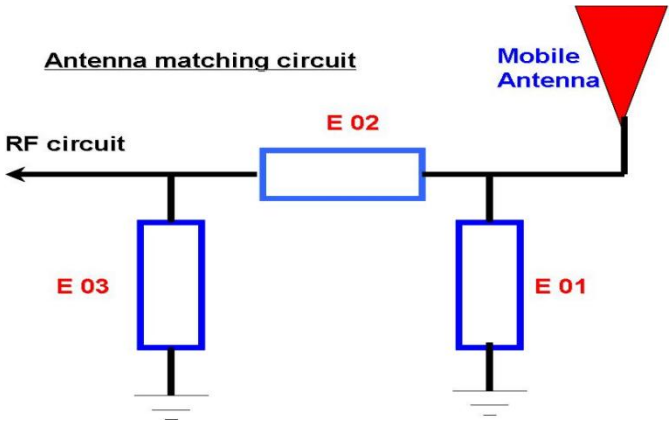

Element	Value	Vender
E1(0402)	OPEN	/
E2(0402)	SHORT	50 Ω
E3(0402)	OPEN	/

注:匹配未更改。

3.Curing antenna **S11 Testing Result.** 无源测试

The S11 parameter was performed using a Agilent 8753D Network Analyzer and BEST'S test fixture that was using customer-providing device.

VSWR (Voltage standing wave ratio)

The Voltage Standing Wave Ratio (VSWR) is an indication of how good the impedance match is. VSWR is often abbreviated as SWR. If the transmission line and the antenna are not matched, the antenna will not accept all the power from the transmission line. The part it does not accept is reflected back and forth between the transmitter and the antenna. This sets up a fixed wave pattern along the line which we can measure and which is called the voltage standing wave ration(VSWR).The VSWR (ratio of maximum voltage to the minimum voltage along the line)expresses the degree of match between the transmission line and the antenna. When the VSWR is 1 to 1(1:1) the match is perfect and all the energy is transferred to the antenna prior to be radiated. When the VSWR is 1.5:1, 96% of the power reaches the antenna. By definition VSWR can never be less than 1.VSWR and reflected power are different ways of measuring and expressing the same thing. A high VSWR is indication that the signal is reflected prior to being radiated by the antenna.

驻波 **VSWR**

Marker	2400MHz	2450MHz	2500MHz
S.W.R	<3.0		

4.测试 3D 报告 (Test 3D Report)

频率(Frequency)：**2400MHZ** 增益(Gain)：**2.01dbi**

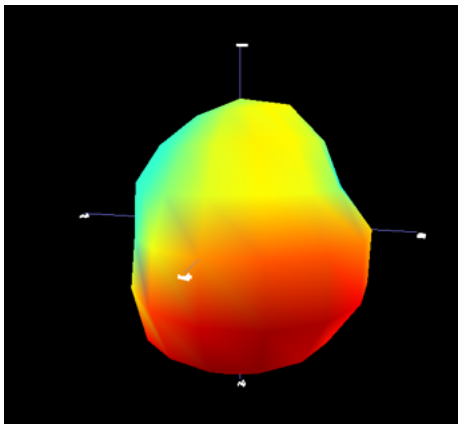

频率(Frequency)：**2450MHZ** 增益(Gain)：**1.89dbi**

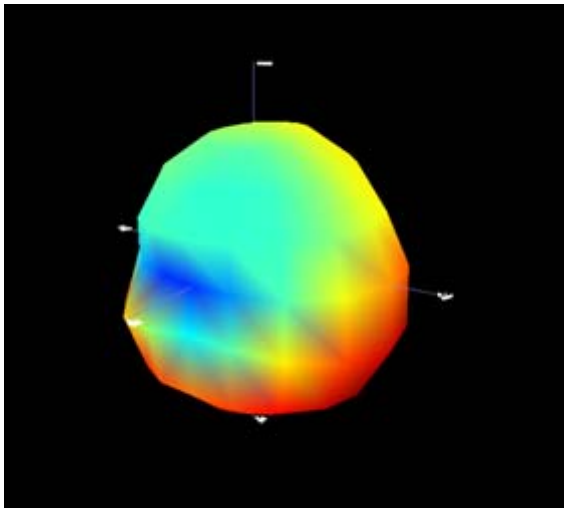

频率(Frequency)：**2500MHZ** 增益(Gain)：**2.35dbi**

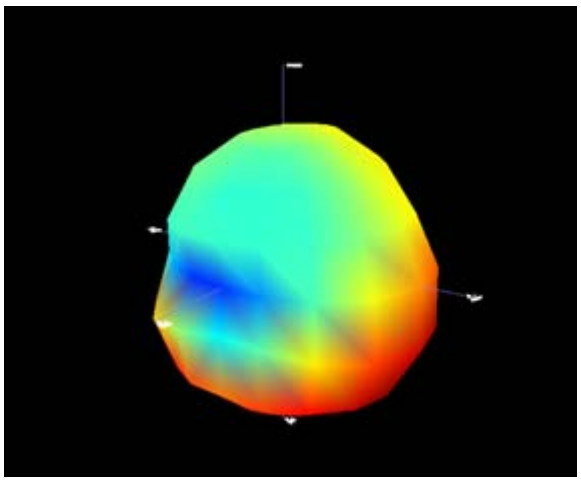

5. 产品外观图 (Product appearance drawing)

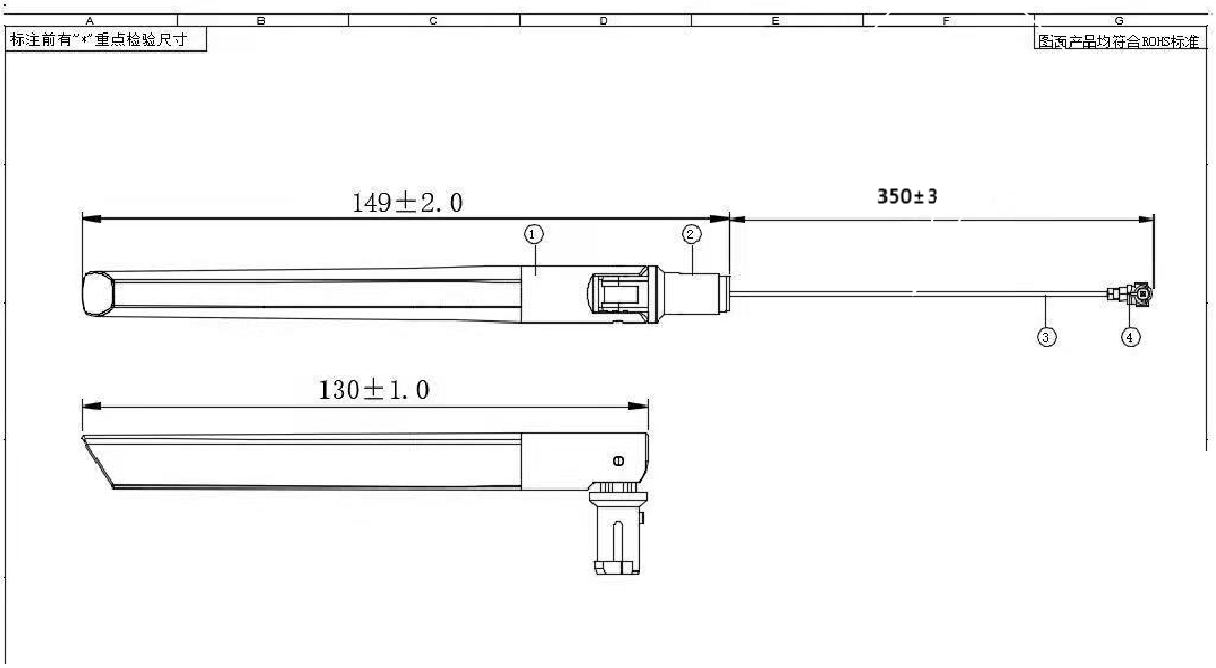

Length：350MM