5. Maintenance

For better operation and lifetime of your TerraMow, clean your TerraMow regularly and replace any worn parts.

Please use a soft brush or cloth to clean the exterior of your TerraMow thoroughly. Do NOT clean with alcohol, gasoline, acetone, or other corrosive/volatile solvents. These substances may damage the appearance and internal structure of your TerraMow.

WARNING : Before maintenance, please ensure that your TerraMow is powered off.

WARNING : Wear protective gloves when handling or working near the blade.

WARNING : Always wear long trousers and work shoes when servicing the mower.

WARNING : TerraMow can only be maintained by adults.

5.1 Keep it clean

Regularly clean your TerraMow to remove dust, debris, and accumulated grass clippings.

Please do NOT use a high-pressure washer. high-pressure water can leak into the seals and damage electronic and mechanical parts.

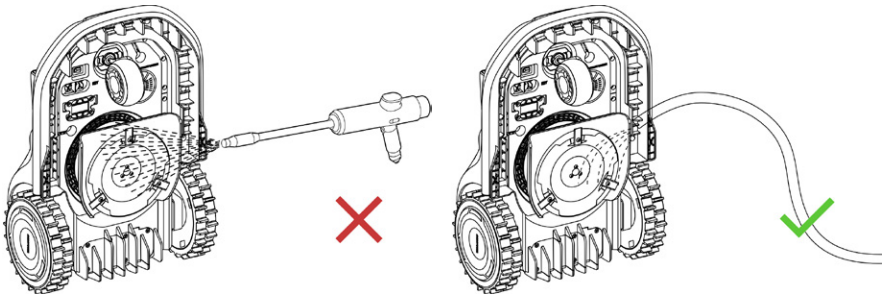

Chassis and blade disc

If the chassis or blade disc are dirty, use a brush or a water hose to clean. Please remove any stuck debris so that it does not cause a crack in the blade disc.

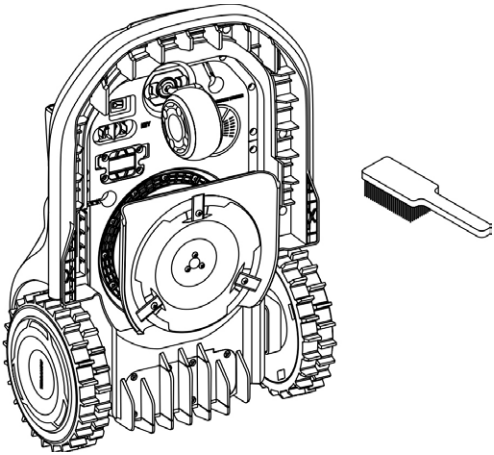

Driving wheels

C Remove mud or debris from the wheels for better traction.

Omni wheel

Inspect and clean universal wheels regularly. If the wheels are stuck, clean off the debris and lubricate the wheels.

Rain sensor

Check the rain sensor regularly and make sure the rain sensor is not covered by mud, grass clippings or other objects. You can either wash it or clean it with a soft brush. After cleaning, dry the sensor area.

Vision sensor

If the TerraVision sensors are covered with dirt,please use a clean tissue to wipe the TerraVision.

WARNING : Do not use any sharp or hard materials, such as a brush, to clean the TerraVision.

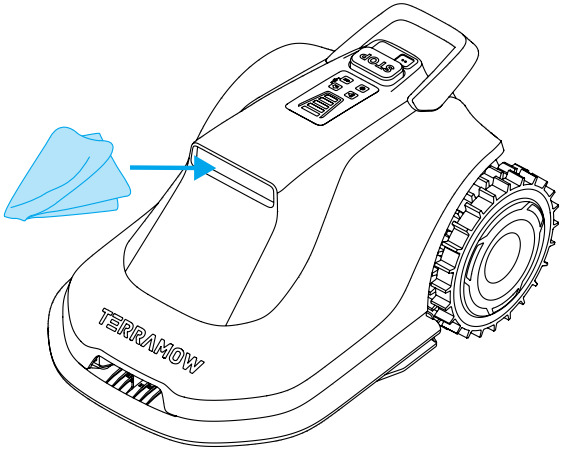

Base station

To ensure proper docking, regularly inspect and clean the base station to remove any debris or mud. Make sure all connecting parts of the base station, the extension cable, and the power supply are not blocked.

Please use a clean cloth to wipe the base station marker regularly.

WARNING : To avoid scratching, do not use any sharp or hard materials, such as a brush, to clean the base station marker.

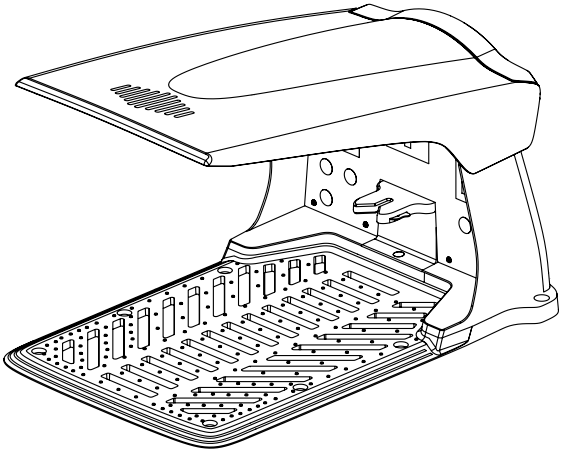

5.2 Replace cutting blades

To ensure safe operation, replace worn or damaged blades. Additionally, regularly changing the blades helps achieve satisfactory mowing results and efficient energy use.

For regular users, it's recommended to replace the blades and screws every 1–2 months for safety and improved mowing performance

WARNING : Always wear heavy gloves when inspecting or servicing the blade.

WARNING : Use only the specified screws and blades approved by the manufacturer.

WARNING : Do not reuse screws. Used screws may wear out quickly, causing the blade to loosen, which can lead to serious injuries.

WARNING : To maintain a balanced cutting system, replace all 3 blades and screws simultaneously.

How to replace the blades

1. Gather the following items before starting.

- 3 blades (TERRAMOW SK5)
- 3 screws
- Cross-tip screwdriver (PH2)
- Gloves

× 3

Bolts

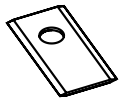

× 3

Blades

Gloves

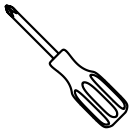

Cross-tip screwdriver

2. Turn off the mower.

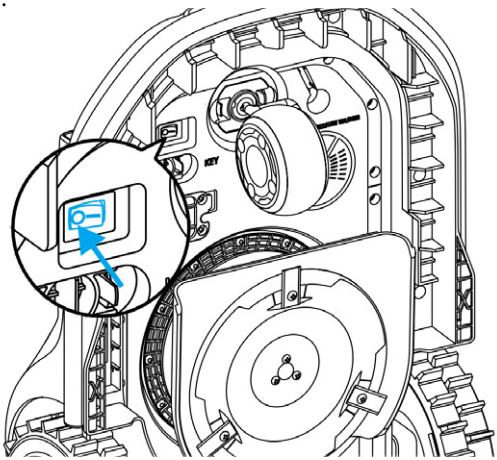

3. Stand your TerraMow upright or flip it upside down. Place your TerraMow on a soft, clean surface to prevent scratches.

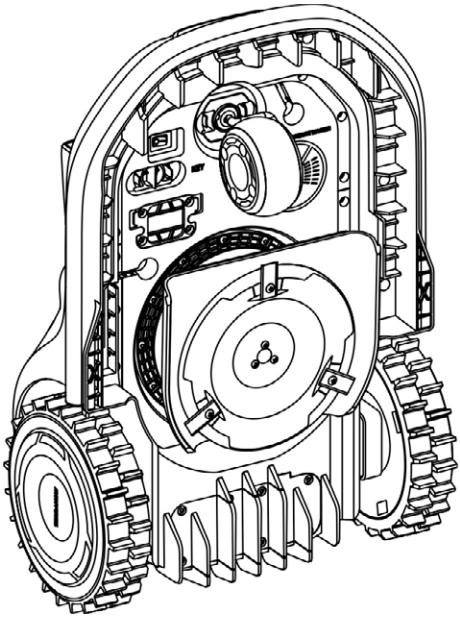

4. Use a cross-tip screwdriver (PH2) to unscrew the 3 screws.

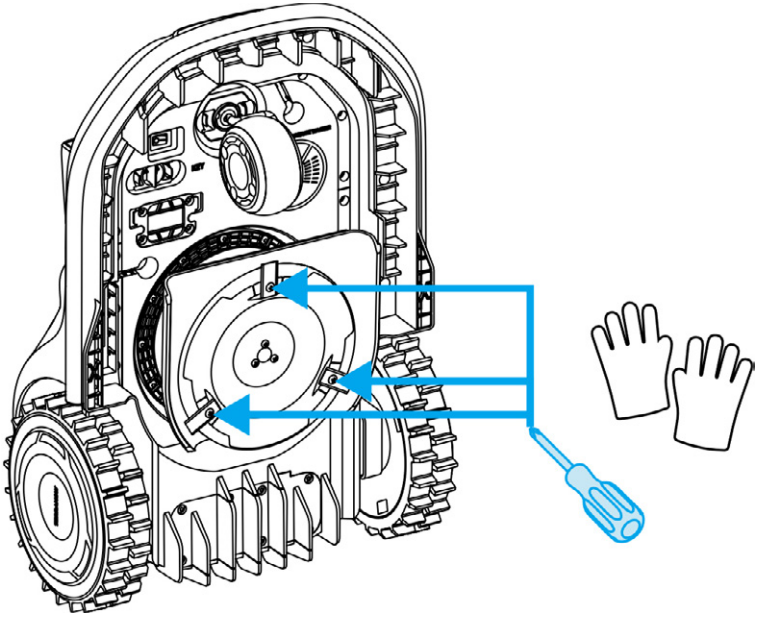

5. Take out the 3 screws and blades.

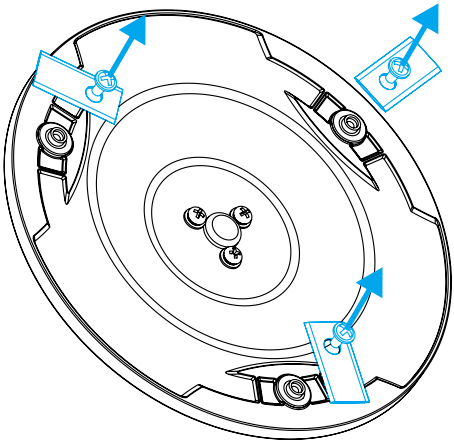

6. Install and ensure the new blades and screws are securely fastened (Torque: 1 N·m).

WARNING : Do not hang the blade on the screw.

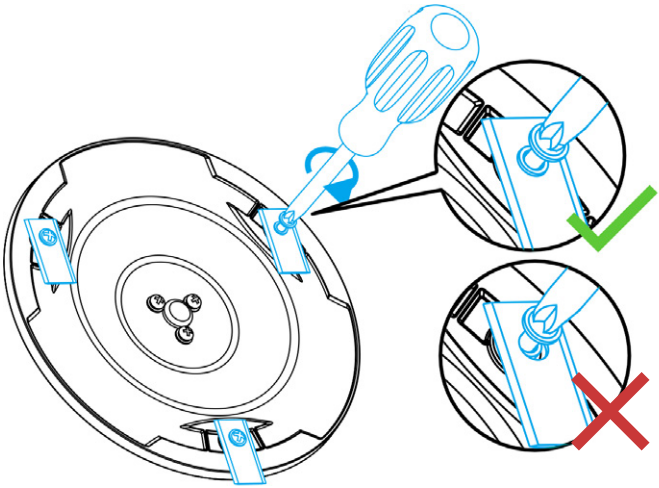

7. Check that the blades pivot freely. If not, please loosen the corresponding screws and tighten them again.

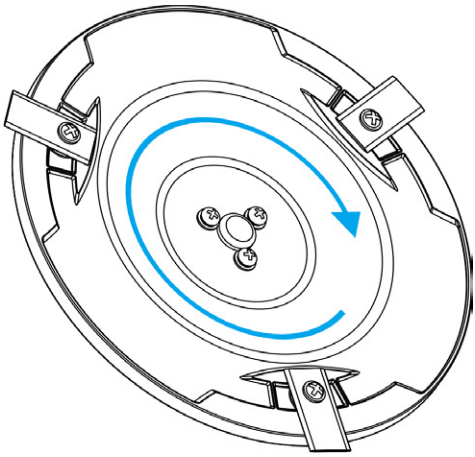

5.3 Transportation

To safeguard your TerraMow, please use its original packaging for long-distance transport.

Always turn off the device before lifting, moving, or transporting it. Handle it gently to avoid damage from rough handling, such as throwing or applying excessive pressure.

Proper Lifting and Moving:

Lift the mower using the handle, ensuring the blade disc is facing away from your body.

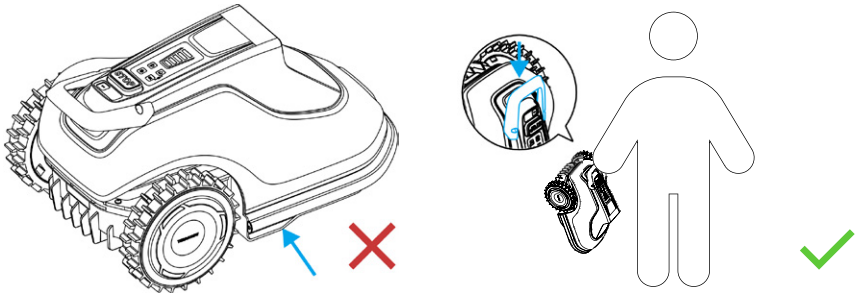

WARNING : Never lift or carry your TerraMow while its motor is operating or rotating.

To prevent damage to your TerraMow and/or the charging station, please DO NOT lift the mower by the handle while it is docked at the charging station. Always remove your TerraMow from the charging station before lifting.

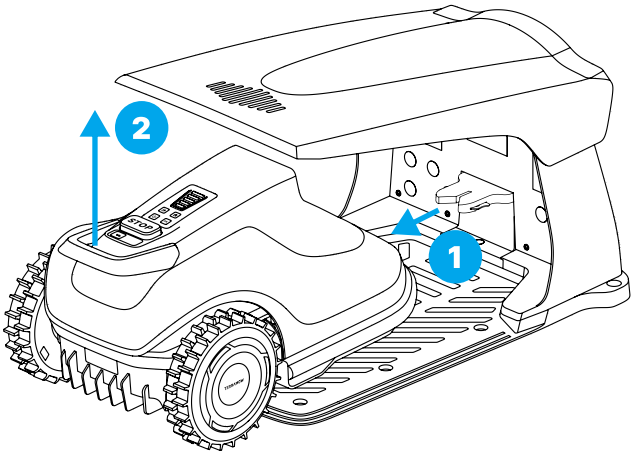

5.4 Battery

• Before storing, power off the mower and charge its battery to 85% or higher to prevent over-discharge and potential damage to the electrical components. For long-term storage, recharge the mower every 120 days (about 4 months).

• Battery damage caused by over-discharge will not be covered by the Limited Warranty.

• DO NOT use or store the battery under extreme temperature conditions, i.e., above 45° C (113° F) or below 5° C (41° F).

• Temperature protection will be activated at 0° C (32° F)/55° C (127° F), the battery won't be charged unless the temperature reaches 5° C (41° F) or above/reduces to 50° C (118° F) or below.

When the battery temperature is too high or too low, the mower will not start mowing.

The battery life depends on how often the product is used and the total working hours. When the operation time is significantly shorter than usual per full charge consider contact with the after-sellers.

WARNING :

- Use only the original battery pack or that of the same model as specified by the manufacturer. Each mower contains one battery pack.
- Depending on the specific mower model, the rated capacity of the battery is 4500 mAh.
- Do not use non-rechargeable batteries.
- Do not dismantle or puncture the battery casing. Keep away from metal objects to prevent short circuits. Keep away from fire, heat and direct sunlight.
- Do not remove the battery from the mower.

5.5 Power supply

Disconnect the power supply:

- Before clearing a blockage.
- Before checking, cleaning or working on the machine.
- After striking a foreign object to inspect the machine for damage.

Regularly examine the cord, plug, enclosure, and other parts. If any damage or signs of aging are found, stop using it immediately.

WARNING :

- **DO NOT Use a Damaged Power Supply:** Operate your equipment only with a fully intact power supply. If the power cord or plug is damaged, it must be replaced by the manufacturer, a service agent or the after-seller. This is crucial to prevent hazards. If the extension cord is found to be defective, replace it with a manufacturer-approved 10-meter cable.
- **Avoid Connecting or Touching Damaged Cords:** Never plug in a damaged cord or extension to the power outlet. Avoid touching a damaged cord or extension cable until it's safely unplugged from the socket. Damaged cords could expose you to live electrical parts, posing a danger.
- **Use Only with the Intended Devices:** You must not use the power supply with any device or battery other than those specified by the manufacturer. Using it with other products can pose risks of injury, fires, or electric shocks. Only the original batteries are assured to be safe for use.
- **DO NOT Charge a Leaking Battery:** Never attempt to charge your device if the battery is leaking. Doing so risks harm and equipment damage.
- Keep the extension cable away from moving hazardous parts to avoid damage to the cords which can lead to contact with live parts.
- During a thunderstorm threat, unplug the power supply from the outlet. Disconnect all cables and wires linked to the charging station. Reconnect everything once the risk of thunder has passed.

WARNING:

Connect the mower and/or its peripherals only to a supply circuit protected by a residual current device (RCD) with a tripping current of not more than 30 mA.

5.6 Storage

- Before storing, ensure the mower is powered off and its battery is charged to at least 85%. This prevents over-discharge that can lead to permanent damage.
- Store the mower in a cool, dry place indoors. Keeping it away from sunlight and extreme temperatures will help prevent the premature aging of components and potential battery damage.
- Keep the mower, its charging station, and power supply away from any heat sources like stoves or radiators, as well as chemicals. Ensure the power supply is protected from moisture and placed in a well-ventilated area.

5.7 Recycling and end-of-life disposal

DO NOT treat your TerraMow as domestic waste. For recycling information, contact your domestic waste service, your municipality, or point of sale.

WARNING : DO NOT dispose of TerraMow in a landfill, by incineration, or by mixing with household trash. Danger or serious injury can occur because of the electrical components.

5.8 Other

- TerraMow is always being improved and new software versions are made available for free. Remember to keep your TerraMow software updated.

6. Quick reference

6.1 Operation message

Message Code	Cause	Solution
01	When the battery level is between 0% and 8%, TerraMow will not respond to commands or return to the base station automatically.	Please manually carry your TerraMow back to the base station.
02	When powered on and the battery level falls below 5%, TerraMow will automatically shut down due to low battery level.	Please manually carry your TerraMow back to the base station.
03	When the power switch is off, it is not possible to initiate mowing or mapping.	Turn on the power switch located at the bottom of your TerraMow.
10	The upgrade cannot proceed because the hardware switch is not turned on.	Turn on the power switch located at the bottom of your TerraMow.
22	The upgrade cannot proceed because the battery level is below 30%.	Wait until the battery level is above 30% before attempting to upgrade.
23	The upgrade cannot proceed because it is not charging at the base station.	Please manually carry your TerraMow back to the charging station.
30	When TerraMow is operating (not in Spot Mode) and the battery level falls below 15%, it will automatically trigger a return to the base station for recharging.	TerraMow will return to the base station and charge automatically, don't worry about it.
34	Upon starting, if the vision sensor detects dirt, potentially caused by water mist, TerraMow will endeavor to heat up to clear the mist.	Please wait for your TerraMow to automatically complete the defogging process.

35	When TerraMow attempts to start mowing, it detects insufficient ambient light levels and cannot proceed.	Please ensure there is adequate lighting in TerraMow's working environment before attempting to start mowing.
36	When TerraMow attempts to start mowing, it detects rain and cannot proceed.	Please wait until the rain stops before attempting to start mowing.
37	During mowing, if rain is detected, the TerraMow automatically returns to the base station.	Please wait until the rain stops before resuming mowing.
38	When TerraMow attempts to start working, the CPU temperature exceeds 90 degrees Celsius, preventing it from initiating the task.	The environment may be overheated. Please contact customer service for assistance.
39	While operating, if TerraMow's CPU temperature exceeds 100 degrees Celsius, it will automatically return to the base station.	The environment may be overheated. Please contact customer service for assistance.
42	Mowing or mapping cannot resume when the battery is below 15%.	Ensure the battery level is above 15% before resuming mowing or mapping.
44	During mowing, the current scheduled mowing will not be executed.	
47	Mapping failed.	Ensure your lawn has been prepared correctly according to the instructions. Once ready, place your TerraMow on the base station to retry or resumethe mapping process.

50	Positioning failed	Place your TerraMow in a previously visited location it has previously visited and resume the task. Your TerraMow will attempt to relocate itself. If unsuccessful, please manually carry your TerraMow to the base station and restart.
51	The scheduled time has arrived, but the brightness is too low.	TerraMow will start mowing once the light level is adequate.
52	Mapping area limit reached. Task nearing completion.	For larger working areas, consider models with expanded coverage capabilities.
55	Please place TerraMow on the base station to start mapping or mowing.	Please manually carry your TerraMow back to the base station.
57	While operating, it was discovered that the vision sensor was dirty, possibly due to water mist. Attempting to stop in place, heat up to clear the mist, and then continue working.	Please wait for your TerraMow to automatically complete the defogging process.
64	When the battery level is below 15%, starting the mowing process is not possible due to the low battery level.	Wait until the battery level is above 15% before attempting to start mowing or mapping.
86	Log upload failed.	Retry. If the problem persists, please contact customer service.

87	Press the STOP button onthe device. Regardless of the task, it will immediately stop moving, turn off the blade disc, and enter a paused state.	
90	Spot mode mowing is initiated off the lawn, or TerraMow is lifted during mowing without being returned to the lawn.	Place the TerraMow on the lawn ensuring it is facing the grass, then let it continue working.
92	Failed to save the map.	Please click on "upload log" in the App and contact customer service for assistance.
94	When TerraMow is operating in Spot Mode and the battery level falls below 15%, it will automatically trigger a return to the starting point.	None.
95	If it becomes too dark or sunset is approaching, TerraMow will automatically return to the base station or the starting point of Spot Mode.	None.
96	TerraMow is currently saving the map and cannot be operated on. Please try again later.	Please wait patiently for the TerraMow to finish saving the map.
98	TerraMow is processing data and cannot be operated now. Please try again later.	Please wait patiently for the TerraMow to complete data processing.
99	Spot mode mowing cannot be initiated while TerraMow is at the base station.	Remove the TerraMow from the base station and place it on the lawn where you want to perform Spot Mode mowing, then try to start Spot Mode mowing again.

6.2 Fault codes

Fault Code	Cause	Solution
0001	Blade disc obstructed by foreign objects.	Please check if there are any foreign objects blocking or entangled with the blade disc. After clearing the foreign objects, please try again. If this error persists after removing the foreign objects, please contact customer service for assistance.
0002	Blade disc motor fault.	Please restart your TerraMow and try again. If the issue persists after restarting, please contact customer service.
0003	Blade disc obstructed by foreign objects or motor overheating due to excessive load.	Please check if there are any foreign objects blocking or entangled with the blade disc. After clearing the foreign objects, please try again. If this error persists after removing the foreign objects, it may be due to the lawn causing an excessive load on the mower. Please use other tools to cut the grass to 7cm height first.
0004	Blade disc motor fault detected.	Please restart your TerraMow. If the issue persists after restarting, please contact customer service.
0005	The blade disc motoris overheating. Mowing will resume once the temperature returns to normal.	Please wait patiently for the blade disc motor to cool down.
0101	The blade disc height adjustment motor is blocked and cannot reach the preset height.	Please check if there are any foreign objects stuck in the blade disc adjustment mechanism.

0102	Blade disc adjustment motor fault detected.	Please restart your TerraMow. If the issue persists after restarting, please contact customer service.
0103	The blade disc height adjustment motor is obstructed.	Please check if there are any foreign objects stuck in the blade disc adjustment mechanism.
0201	TerraMow has been lifted while working.	Please place your TerraMow back on the ground.
0202	TerraMow has been lifted and cannot start working.	Please place your TerraMow back on the ground.
0301	The safety key is not detected.	Please check if the safety is correctly inserted into the enabled position.
0401	TerraMow is tilted at an excessive angle while working.	Please place your TerraMow back on level ground.
0402	TerraMow is tilted at an excessive angle and cannot start working.	Please place your TerraMow back on level ground.
0403	IMU fault detected. Unable to continue operation.	Please restart your TerraMow. If the issue persists after restarting, please contact customer service.
0501	The driving wheel is blocked by a foreign object.	Please check if there are any foreign objects entangled or blocking the driving wheel. After removing them, you can continue mowing.
0502	Driving wheel motor fault detected.	Please restart your TerraMow. If the issue persists after restarting, please contact customer service.
0503	Driving wheel motor fault detected.	Please restart your TerraMow. If the issue persists after restarting, please contact customer service.

0504	The temperature of the driving wheel motor is too high to continue working.	Please wait for 10 minutes to allow the motor to cool down before attempting to restart your TerraMow.
0505	The driving wheel motor temperature is too high.	Your TerraMow will resume working once the temperature returns to normal.
0601	Battery fault (under-voltage).	Please restart your TerraMow. If the issue persists after restarting, please contact customer service.
0602	Battery fault (temperature cannot be detected).	Please restart your TerraMow. If the issue persists after restarting, please contact customer service.
0603	Battery temperature is out of the operating range.	Your TerraMow will resume operation once the temperature returns to normal.
0604	Battery fault (battery cannot be detected). Please restart the machine. If the issue persists after restarting, please contact customer service.	Please restart your TerraMow. If the issue persists after restarting, please contact customer service.
0701	The charging port voltage is too low.	Please clean the charging ports at the base station, remove any foreign objects and wipe away moisture. Check if the power adapter is short-circuited or if the plug connections are short-circuited.
0801	Vision sensor malfunction.	Please restart your TerraMow. If the issue persists after restarting, please contact customer service.
0802	Vision sensor malfunction.	Please restart your TerraMow. If the issue persists after restarting, please contact customer service.

0803	The vision sensor is dirty or occluded.	Please clean the vision sensor and the base station marker.
0902	A significant height difference has been detected near TerraMow.	For safety, please keep TerraMow away from the edge.
0903	TerraMow is stuck.	Please clear obstacles around TerraMow or create a no-go zone around the obstacles.
0904	TerraMow cannot reach the target area.	Please clear any obstacles along the path to the target area.
0905	TerraMow is unable to return to the base station.	Please manually carry your TerraMow back to the base station.
0906	TerraMow cannot return to the base station due to obstacles around the base station that hinder its return.	Please clear any obstacles around the base station and then continue the task.
0908	When attempting to start mapping, your TerraMow is not on the base station.	Please place TerraMow back on the base station and ensure it is charging before starting the mapping task.
0910	TerraMow has returned to the base station but found that it is not receiving power.	Please check if the base station is properly connected to the power supply and ensure that the charging pins are clean.
1400	TerraMow's collision sensor is stuck.	Please check if the bumper is stuck by an obstacle.
1404	TerraMow is in factory mode and cannot be used.	Please restore factory settings to exit factory mode.
1406	TerraMow's processor is overheated.	Please manually carry your TerraMow back to the base station.

1408	The base station is not facing the lawn or is too far from the lawn.	Please adjust the position and orientation of the base station so that its front faces the lawn.
1409	TerraMow has moved beyond the physical fence area and may have been stolen.	Please confirm whether your TerraMow has been stolen or mistakenly placed outside of the working lawn.
1410	TerraMow's GPS module is malfunctioning.	Please restart your TerraMow. If the issue persists after restarting, please contact customer service.
1411	TerraMow's processor is malfunctioning.	Please restart your TerraMow. If the issue persists after restarting, please contact customer service.
1412	TerraMow's 4G module is malfunctioning.	Please restart your TerraMow. If the issue persists after restarting, please contact customer service.

7. Limited warranty

Shenzhen Muxin Intelligent Technology Co., Ltd. guarantees that, during the warranty period, this product will be free from defects in materials and craftsmanship under normal usage following the guidelines and instructions provided in our official documentation. The official documentation includes, but is not limited to, the user manual, quick start guide, maintenance instructions, product specifications, disclaimers, and notifications within our app. The documentation may be translated into different languages. In the event of a conflict, the English version shall prevail and control.

The duration of the warranty varies for different products and components, as detailed in the table below:

Componet	Warranty
Robotic mover	2 years
base station	2 years
power adapter	2 years
Decoration/Apparance	No warranty
Cutting blade and bolts	No warranty
Other product accessories (multi-zone pathway sign, No-go zone marker, screws, hex key,extension cable)	No warranty

If the product does not perform as promised during the warranty period, please contact Muxin Customer Service for assistance. Be prepared to provide your receipt and the product's serial number upon request.

• The warranty period for the product starts from the day when the product is delivered.

- If you are unable to present an invoice or other acceptable proof of purchase, the warranty period will start 90 days after the production date indicated on the product, unless a different arrangement has been made between you and Muxin.
- If you wish to send your product for further diagnosis to a local service center or the Muxin factory, you will need to organize the shipping yourself. Should the issue be covered by the warranty, Muxin will repair or replace the product and return it to you at no additional charge. If the problem is not covered by the warranty, Muxin or the designated service center reserves the right to charge a fee for the service provided.
- DOA: Muxin offers a Warranty Repair Service for products under DOA conditions (Dead-On-Arrival, Defective-On-Arrival). If you receive a product from Muxin or an authorized dealer that is damaged or malfunctioning upon arrival, please immediately contact Muxin or the authorized dealer to determine if a replacement is necessary.

  — To initiate a repair or replacement under DOA conditions, you must fill out a repair form or RMA (Return Material Approval) and email it to support@terramow.com. This form, along with the product requiring repair, must be sent to us.

  — To be eligible for a replacement under DOA conditions, you need to request the replacement within 7 calendar days of receiving the product.

  — The replacement process, including the return of the product with all original accessories, attachments, and packaging, will be completed within 30 calendar days from the date Muxin receives the returned goods.
- The warranty does not cover damages resulting from misuse or failure to follow the instructions in the user manual, including but not limited to:
- Claims made by third parties against you for damages.
- Loss, damage, or disclosure of your data.
- Special, incidental, punitive, indirect, or consequential damages. This includes, but is not limited to, loss of profits, business revenue, goodwill, or anticipated savings.
- In any event, the total liability of Muxin, its affiliates, suppliers, resellers, or service providers for damages from any cause is limited to the amount of actual direct damages, up to a maximum of the amount paid for the product.

8. Important information

8.1 Trademark and legal statement

TERRAMOW is a registered trademark of MUXIN Corporation, Android and Google Play are trademarks of Google LLC, and App Store is a service mark of Apple Inc. All trademarks mentioned in this manual are the property of their respective owners, retaining their trademark rights.

We have made every effort to include descriptions and instructions for all features of TERRAMOW in this printed material. However, due to ongoing product improvements and design changes, your TERRAMOW may differ slightly from what is displayed in this document. Please visit the Apple App Store (iOS) or Google Play Store (Android) to download and install the latest version of the TERRAMOW application.

Please note that TERRAMOW comes in multiple models with varying features, and some features mentioned in this document may not apply to your device. The manufacturer reserves the right to change the design and functionality of TERRAMOW products and documents without prior notice.

© 2024 MUXIN Intelligent Technology Co., Ltd. All rights reserved.

TERRAMOW Legal Disclaimer:

IMPORTANT: Users are required to agree to read the entire user manual and fully understand its contents (especially the sections related to safety warnings) before using this product, and comply with the instructions herein.

All damages resulting from misuse or failure to follow the user manual, including but not limited to the following circumstances, are the responsibility of the user:

1. Claims against you by third parties for injuries caused;

2. Damage to your product, loss, damage, or disclosure of data;

3. Special, incidental, punitive, indirect, or consequential damages, including but not limited to loss of profits, business revenue, goodwill, or anticipated savings.

MUXIN and its affiliates will not be liable for any related claims, liabilities, or losses.

In no event shall MUXIN, its affiliates, suppliers, distributors, or service providers be

liable for damages from any cause exceeding the amount of actual direct damages, not to exceed the amount paid for the product.

1. TERRAMOW is an electric household product equipped with blades, which may pose risks to users, others, and nearby property. Users are required to thoroughly read the user manual and understand its contents, assuming all risks and losses associated with the product (especially those related to violations of safety warning instructions). Such risks include but are not limited to injuries, bodily harm, and/or property damage. If these consequences arise from the user assuming risks, MUXIN and its affiliated companies will not be held responsible for any related claims, liabilities, or losses.

2. This device is not suitable for individuals with weakened physical, sensory, or intellectual abilities (which may affect their ability to safely operate the product), or for those lacking experience and knowledge, including children, unless they have been supervised or instructed by a person responsible for their safety, and understand the instructions for using the equipment.

3. This device is designed for mowing lawns in open and level areas. Please use only equipment recommended by the manufacturer. Any other type of usage constitutes improper use.

4. Please review and comply with the laws or regulations governing this product in your local area. Users are responsible for ensuring that their use and/or disposal of the product within their jurisdiction complies with legal requirements.

5. Consumers should immediately inspect the product and its accessories upon receipt to ensure they are in good condition.

6. All individual components and parts of TERRAMOW must be installed correctly according to the user manual. Improper installation may lead to accidents. The lawnmower may contain movable components and small parts. Please keep them out of reach of children to avoid choking hazards.

7. Please pay attention to the safety warnings listed in the user manual, including but not limited to:

WARNING: Incorrect usage of the product may pose hazards.

WARNING: Do not use the product when people, especially children or animals, are present in the working area.

WARNING: Keep hands and feet away from rotating blades. Never place hands or feet near or under the product when it is in operation.

WARNING: Seek medical assistance in case of injury or accident.

WARNING: Non-compliance with instructions in the user manual may result in injury or death to operators or bystanders.

WARNING: Failure to comply with instructions in the user manual may lead to product, material, or adjacent area damage.

WARNING: Always the lawnmower within 6 meters of your position during operation, and avoid exceeding your line of sight.

WARNING: Do not mow while wearing open-toe sandals or barefoot.

WARNING: Do not attempt to charge the lawnmower, power unit, charging station, or power outlet if they are wet.

WARNING: Do not connect the power supply if the power cord or plug is damaged.

WARNING: Keep away from flammable or combustible materials while charging.

WARNING: Immediately stop charging and contact customer service upon detecting unusual odors, sounds, or light indications.

WARNING: Do not ride the mower or bass station.

WARNING: Do not touch rotating blades.

WARNING: Do not dispose of the product in a landfill, burn it, or mix it with household waste. Electronic components and batteries may pose serious hazards/injuries. For information on battery and electronic waste, please contact your household waste disposal service, local or regional waste management office, or your point of purchase.

8.This product contains battery components. Please adhere to the following safety handling and usage guidelines:

- **Do not remove battery from TERRAMOW.** These batteries are essential for the device's operation and should not be tampered with.
- **Maintain battery in a clean and dry condition.** Avoid exposure to moisture or contaminants that may affect their performance.
- **Avoid exposing battery to heat sources or flames.** Prolonged exposure to high temperatures can lead to damage or malfunction. Store battery away from direct sunlight.
- **Prevent short-circuiting of battery packs.** Store them securely and avoid contact with conductive materials that could cause unintended connections.

- **Do not dismantle or modify battery packs.** Alterations may result in hazardous situations or damage to the product.
- **Handle battery with care to prevent mechanical shock.** Rough handling can lead to internal damage or leakage.
- **In case of leakage, avoid skin or eye contact with battery fluids.** Rinse affected areas thoroughly with water and seek medical attention if necessary.
- **Seek immediate medical advice if battery are swallowed.** Ingestion can lead to serious health complications.
- **Use only designated battery recommended for this device.** Incompatible batteries may pose safety risks or damage the equipment.
- **Keep battery out of reach of children.** Store them in a secure location inaccessible to young children.
- **Dispose of battery properly in accordance with local regulations.** Do not dispose of battery in regular household waste.

By adhering to these guidelines, you ensure safe usage and prolong the lifespan of your device. For any inquiries or assistance, please contact our customer support.

9. Users are not permitted to use any non-genuine accessories, and unauthorized disassembly or modification of the product is prohibited. You shall bear sole responsibility and risk for any damages, injuries, and property losses resulting from this. MUXIN shall not be liable for any claims, liabilities, and losses (or potential liabilities) arising from any harm, damage, or legal disputes caused by violations of the above terms, user inexperience, or failure to comply with the instructions in this manual.

10. MUXIN reserves the right to make changes to the product, release firmware updates, and update this manual at any time. Due to printing errors, inaccuracies in current information, or improvements to procedures and/or equipment necessary for the improvement of this user manual, MUXIN may make changes at any time without further notice. Such changes will be incorporated into new versions of this user manual. All illustrations are for reference only and may inaccurately depict actual equipment. Actual products and features may vary. Due to product updates, there may be some discrepancies in color, appearance, and other aspects between the products listed in this manual and the products you actually purchase. Please refer to the actual product.

11. This document should be considered a permanent part of the product and should be provided to the user along with the product at all times. Once again, thank you for choosing TERRAMOW!

8.2 Conformity

Declaration of Conformity

Product: ROBOTIC LAWNMOWER

Model Number: S1200/S800

Accessories: Refer to Annex 1

Manufacturer's Name: Shenzhen Muxin Intelligent Technology Co., Ltd.

Manufacturer's Address: Zone 1C-B, 2nd Floor, Building 1C, Tingwei Industrial Park, No.6 Liufang Road, Bao'an District, Shenzhen, Guangdong, China

We, Shenzhen Muxin Intelligent Technology Co., Ltd. declare under our sole responsibility that the above referenced product is in conformity with the applicable requirements of the following directives :

RED Directive: 2014/53/EU

RoHS Recast Directive: 2011/65/EU (EU) 2015/863

WEEE Directive: 2012/19/EU

REACH Regulation: 2006/1907/EC

Conformity with these directives has been assessed for the product by demonstrating compliance to the following harmonized standards and/or regulations :

Radio Spectrum

EN 300 328 V2.2.2; EN 303 413 V1.2.1; EN 300 440 V2.2.1 ;

EN 301 893 V2.1.1; EN 301 908-1 V15.2.1; EN 301 908-13 V13.2.1

Safety EN 60335-1:2012+A11+A13+A1+A14+A2+A15 Annex R

EN 50636-2-107:2015+A1+A2+A3

Health EN/IEC 62311:2020;

EMC EN 301 489-1 V2.2.3; EN 301 489-3 V2.3.2; EN 301 489-17 V3.2.4;

EN 301 489-19 V2.2.1; EN 301 489-52 V1.2.1;

EN/IEC 61000-3-2:2019+A1:2021;

EN 61000-3-3:2013+A1:2019+A2:2021

RoHS 2011/65/EU; (EU) 2015/863

WEEE 2012/19/EU

REACH 2006/1907/EC

Signed for and on behalf of: Shenzhen Muxin Intelligent Technology Co., Ltd.

Place: Shenzhen, China Date: 2024.03.30

Name: Honghui Zhang Position: CEO

Signature:

Annex 1 Accessories

Item	Model Number	Quantity	Remark
CHARGING STATION	TCS01	1	Essential

8.3 Certications

Information on Disposal for Users of Waste Electrical and Electronic Equipment

This symbol on the product or on its packaging indicates that used electrical and electronic products should not be mixed with unsorted municipal waste. For proper treatment, it is your responsibility to dispose of your waste equipment by arranging to return it to designated collection points.

Disposing of this product correctly will help save valuable resources and prevent any potential negative effects

on human health and the environment, which could otherwise arise from inappropriate waste handling.

To return your used device, please use the return and collection systems or contact the retailer where the product was purchased, which is free of charge, please contact your local authority for further details of your nearest designated collection point.

Penalties may be applicable for incorrect disposal of this waste, in accordance with your national legislation.

FCC COMPLIANCE NOTICE

This equipment must be installed and operated in accordance with provided instructions and the antenna(s) used for this transmitter must be installed to provide a separation distance of at least 20cm from all persons and must not be co-located or operating in conjunction with any other antenna or transmitter. End-users and installers must be provided with antenna installation instructions and transmitter operating conditions for satisfying RF exposure compliance.

This device complies with Part 15 of the FCC Rules. Operation is subject to the following two conditions:

1. This device may not cause harmful interference, and

2. This device must accept any interference received, including interference that may cause undesired operation.

Any changes or modifications not expressly approved by the party responsible for compliance could void the user's authority to operate the equipment.

This equipment has been tested and found to comply with the limits for a Class B digital device, pursuant to part 15 of the FCC Rules. These limits are designed to provide reasonable protection against harmful interference in a residential installation. This equipment generates, uses, and can radiate radio frequency energy and, if not installed and used in accordance with the instructions, may cause harmful interference to radio communications. However, there is no guarantee that interference will not occur in a particular installation. If this equipment does cause harmful interference to radio or television reception, which can be

determined by turning the equipment off and on, the user is encouraged to try to correct the interference by one or more of the following measures:

– Reorient or relocate the receiving antenna.

– Increase the separation between the equipment and receiver.

– Connect the equipment to an outlet on a circuit different from that to which the receiver is connected.

– Consult the dealer or an experienced radio/TV technician for help.

IC RSS WARNING

This device complies with Industry Canada license-exempt RSS standard(s). Operation is subject to the following two conditions: (1) this device may not cause interference, and (2) this device must accept any interference, including interference that may cause undesired operation of the device.

L'émetteur/récepteur exempt de licence contenu dans le présent appareil est conforme aux CNR d'Innovation, Sciences et Développement économique Canada applicables aux appareils radio exempts de licence. L'exploitation est autorisée aux deux conditions suivantes : (1) L'appareil ne doit pas produire de brouillage ; (2) L'appareil doit accepter tout brouillage radioélectrique subi, même si le brouillage est susceptible d'en compromettre le fonctionnement.

IC RADIATION EXPOSURE STATEMENT

This equipment complies with IC RSS-102 radiation exposure limits set forth for an uncontrolled environment. This equipment should be installed and operated with a minimum distance of 20cm between the radiator & your body.

Cet équipement est conforme aux limites d'exposition aux radiations CNR-102 établies pour un environnement non contrôlé. Cet équipement doit être installé et utilisé avec une distance minimale de 20 cm entre le radiateur et votre corps.

Operation of this device in the band 5150-5250 MHz is restricted to indoor use only.
Le fonctionnement de cet appareil dans la bande 5 150-5 250 MHz est limité à une utilisation en intérieur uniquement.

8.4 Contact us

Manufacturer: Shenzhen Muxin Intelligent Technology Co., Ltd.

Address: Zone 1C-B, 2nd Floor, Building 1C, Tingwei Industrial Park, No.6 Liufang Road, Bao'an District, Shenzhen, Guangdong, China

Contact us if you experience issues relating to the operation, maintenance and safety, or errors/faults with your TerraMow.

Europe Authorised Representative:

SUCCESS COURIER SL

CALLE RIO TORMES NUM.1, PLANTA 1,DERECHA OFICINA 3, Fuenlabrada, Madrid, 28947 Spain

UK Authorised Representative:

EVATOST CONSULTING LTD

Office 101 32 Threadneedle street, London,United Kingdom, EC2R 8AY

contact@evatost.com

USA Authorised Representative:

Linkwld LLC

1942 Broadway St. STE 314C, Boulder, CO, 80302, US

FRN： 033625682

Timothy.linkwld@proton.me

Website: www.terramow.com

E-mail Sales: sales@terramow.com

E-mail Support: support@terramow.com

TERRAMOW

SHENZHEN MUXIN INTELLIGENT TECHNOLOGY CO., LTD.

Zone 1C-B, 2nd Floor, Building 1C, Tingwei Industrial Park, No.6 Liufang Road, Bao'an District, Shenzhen City, 518000 Guangdong, P.R. China

www.terramow.com

Copyright © 2024, MUXIN All Rights Reserved.