P5L-PINPad

Quick Start Guide

Product Details

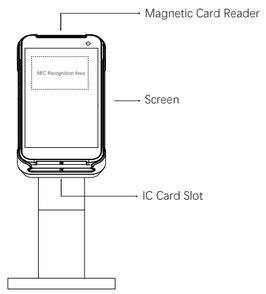

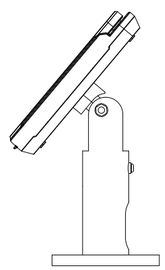

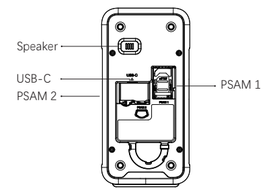

1.Magnetic Card Reader: to swipe magnetic Card
2.NFC Recognition Area: to recognize NFC card
3.Screen: display and touch operation
4.IC Card Slot IC: to swipe IC card
5.Speaker: to play sound
6.USB-C: Charging and communicate with ECR

Main Specifications

Operation System	Android OS
CPU	Qualcomm Quad-Core
Communications	WiFi and Ethernet
Memory	2GB RAM,32GB ROM
Screen	5.5"LCD
BT	BT5.0, Dual Mode
Wi-Fi	WLAN802.11a/b/g/n/ac
NFC	13.56MHz
Magnetic Card Reader	Track 1/2/3
IC Card Reader	ISO7816,Encrypted Head
PSAM Card Slot	2 Slots
SIM Card Slot	2 Slot, 3V/1.8V
Input	5V⎓2A

Safety Alert

- Do not place the terminal in extremely hot or cold conditions.
- Do not place terminal together with computer disc, credit card, travel card or any other magnetic items; otherwise, the information stored in magnetic cards will be affected.
- Do not place the terminal in fire.
- Do not disassemble the terminal or any accessories by yourself.
- Please use a moist and anti-static cloth to clean the terminal screen.
- Warning: Please replace the batteries with the same type and rating to avoid battery explosion.
- Do not expose the battery in strong direct sunlight, near heat sources or any similar conditions.
- Please recycle or dispose of old, weak, or worn batteries in accordance with local, regional, or national law or regulation.
- Do not use detergent with chemical or scrub particle which may damage the terminal body or screen.
- Please keep the terminal in a safe place and avoid crush or squeeze that may cause a damage on screen or camera.
- When the user use the third party's root tool or update with unauthorized operation system, it will bring risk to the normal operation system.
- The maximum operating temperature of the product should not exceed 40℃.
- Product battery should not be placed in an overheated environment (over 60℃).
- To prevent potential electrical damage, please be recommended to use the power adapter and the USB cable provided with the packaging only.
- Please use the lanyard with breakaway safety feature.
- Must charge with the original adapter and original cable or MDB power.

Important Notes

If the device has been left unused for over 6 months, it needs to be fully charged before using.

In order to extend the battery life, for the first two times, it is recommended to use the device until the battery runs out of power before recharging.

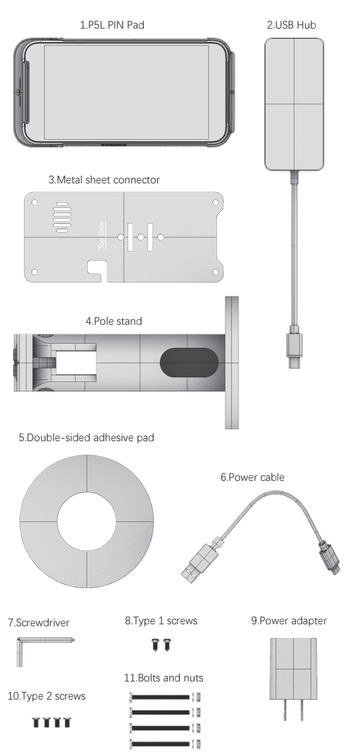

Step 1: Secure the metal sheet connector to the pole stand using two Type 1 screws.

Step 2: Thread the USB Hub cable through the positioning holes on both the pole stand and the metal sheet connector.

Step 3: Insert the USB-C end of the USB Hub cable into the USB-C port on the back of the P5L PIN Pad.

Step 4: Mount the P5L PIN Pad onto the metal sheet connector using four Type 2 screws.

Step 5: Connect the ethernet cable, power adapter, and power cable to the USB Hub.

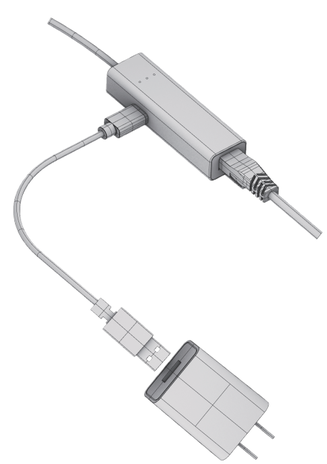

Step 6: Secure the pole stand to the desktop using either double-sided adhesive pad(Option 1) or bolts and nuts(Option 2).

Option 1

Option 2

FCC Statement

Any Changes or modifications not expressly approved by the party responsible for compliance could void the user's authority to operate the equipment.

This device complies with part 15 of the FCC Rules. Operation is subject to the following two conditions:

(1) This device may not cause harmful interference, and

(2) This device must accept any interference received, including interference that may cause undesired operation.

FCC Radiation Exposure Statement:

This equipment complies with FCC radiation exposure limits set forth for an uncontrolled environment .This equipment should be installed and operated with minimum distance 20cm between the radiator& your body .

Note : This equipment has been tested and found to comply with the limits for a Class B digital device, pursuant to part 15 of the FCC Rules. These limits are designed to provide reasonable protection against harmful interference in a residential installation. This equipment generates,uses and can radiate radio frequency energy and, if not installed and used in accordance with the instructions, may cause harmful interference to radio communications. However, there is no guarantee that interference will not occur in a particular installation. If this equipment does cause harmful interference to radio or television reception, which can be determined by turning the equipment off and on, the user is encouraged to try to correct the interference by one or more of the following measures:

—Reorient or relocate the receiving antenna.

—Increase the separation between the equipment and receiver.

—Connect the equipment into an outlet on a circuit different from that to which the receiver is connected.

—Consult the dealer or an experienced radio/TV technician for help.