Notice for TAIYO YUDEN products

Please read this notice before using the TAIYO YUDEN products.

REMINDERS

Product Information in this Catalog

Product information in this catalog is as of January 2021. All of the contents specified herein and production status of the products listed in this catalog are subject to change without notice due to technical improvement of our products, etc. Therefore, please check for the latest information carefully before practical application or use of our products.

Please note that TAIYO YUDEN shall not be in any way responsible for any damages and defects in products or equipment incorporating our products, which are caused under the conditions other than those specified in this catalog or individual product specification sheets.

Approval of Product Specifications

Please contact TAIYO YUDEN for further details of product specifications as the individual product specification sheets are available. When using our products, please be sure to approve our product specifications or make a written agreement on the product specification with TAIYO YUDEN in advance.

Pre-Evaluation in the Actual Equipment and Conditions

Please conduct validation and verification of our products in actual conditions of mounting and operating environment before using our products.

Limited Application

1. Equipment Intended for Use

The products listed in this catalog are intended for general-purpose and standard use in general electronic equipment (e.g., AV equipment, OA equipment, home electric appliances, office equipment, information and communication equipment including, without limitation, mobile phone, and PC) and other equipment specified in this catalog or the individual product specification sheets.

TAIYO YUDEN has the line-up of the products intended for use in automotive electronic equipment, telecommunications infrastructure and industrial equipment, or medical devices classified as GHTF Classes A to C (Japan Classes I to III). Therefore, when using our products for these equipment, please check available applications specified in this catalog or the individual product specification sheets and use the corresponding products.

2. Equipment Requiring Inquiry

Please be sure to contact TAIYO YUDEN for further information before using the products listed in this catalog for the following equipment (excluding intended equipment as specified in this catalog or the individual product specification sheets) which may cause loss of human life, bodily injury, serious property damage and/or serious public impact due to a failure or defect of the products and/or malfunction attributed thereto.

(1) Transportation equipment (automotive powertrain control system, train control system, and ship control system, etc.)
(2) Traffic signal equipment
(3) Disaster prevention equipment, crime prevention equipment
(4) Medical devices classified as GHTF Class C (Japan Class III)
(5) Highly public information network equipment, data-processing equipment (telephone exchange, and base station, etc.)
(6) Any other equipment requiring high levels of quality and/or reliability equal to the equipment listed above

3. Equipment Prohibited for Use

Please do not incorporate our products into the following equipment requiring extremely high levels of safety and/or reliability.

(1) Aerospace equipment (artificial satellite, rocket, etc.)
(2) Aviation equipment *1
(3) Medical devices classified as GHTF Class D (Japan Class IV), implantable medical devices *2
(4) Power generation control equipment (nuclear power, hydroelectric power, thermal power plant control system, etc.)
(5) Undersea equipment (submarine repeating equipment, underwater work equipment, etc.)
(6) Military equipment
(7) Any other equipment requiring extremely high levels of safety and/or reliability equal to the equipment listed above

*Notes:

1. There is a possibility that our products can be used only for aviation equipment that does not directly affect the safe operation of aircraft (e.g., in-flight entertainment, cabin light, electric seat, cooking equipment) if such use meets requirements specified separately by TAIYO YUDEN. Please be sure to contact TAIYO YUDEN for further information before using our products for such aviation equipment.
2. Implantable medical devices contain not only internal unit which is implanted in a body, but also external unit which is connected to the internal unit.

4. Limitation of Liability

Please note that unless you obtain prior written consent of TAIYO YUDEN, TAIYO YUDEN shall not be in any way responsible for any damages incurred by you or third parties arising from use of the products listed in this catalog for any equipment that is not intended for use by TAIYO YUDEN, or any equipment requiring inquiry to TAIYO YUDEN or prohibited for use by TAIYO YUDEN as described above.

Safety Design

When using our products for high safety and/or reliability-required equipment or circuits, please fully perform safety and/or reliability evaluation. In addition, please install (i) systems equipped with a protection circuit and a protection device and/or (ii) systems equipped with a redundant circuit or other system to prevent an unsafe status in the event of a single fault for a failsafe design to ensure safety.

Intellectual Property Rights

Information contained in this catalog is intended to convey examples of typical performances and/or applications of our products and is not intended to make any warranty with respect to the intellectual property rights or any other related rights of TAIYO YUDEN or any third parties nor grant any license under such rights.

Limited Warranty

Please note that the scope of warranty for our products is limited to the delivered our products themselves and TAIYO YUDEN shall not be in any way responsible for any damages resulting from a failure or defect in our products. Notwithstanding the foregoing, if there is a written agreement (e.g., supply and purchase agreement, quality assurance agreement) signed by TAIYO YUDEN and your company, TAIYO YUDEN will warrant our products in accordance with such agreement.

TAIYO YUDEN's Official Sales Channel

The contents of this catalog are applicable to our products which are purchased from our sales offices or authorized distributors (hereinafter "TAIYO YUDEN's official sales channel"). Please note that the contents of this catalog are not applicable to our products purchased from any seller other than TAIYO YUDEN's official sales channel.

Caution for Export

Some of our products listed in this catalog may require specific procedures for export according to "U.S. Export Administration Regulations", "Foreign Exchange and Foreign Trade Control Law" of Japan, and other applicable regulations. Should you have any questions on this matter, please contact our sales staff.

▶ This catalog contains the typical specification only due to the limitation of space. When you consider the purchase of our products, please check our product specification sheets. For details of each product (characteristics graph, reliability information, precautions for use, and so on), see our website (http://www.ty-top.com/) .

CHIP ANTENNAS

REFLOW

■PARTS NUMBER

A H	△	3 1 6	M	2 4 5 0	0 1	– T
①	②	③	④	⑤	⑥	⑦

△=Blank space

①Series name

Code	Series name
AH	Multilayer antenna

②Electrode code

Code	Electrode code
△	With plating

③Dimensions (case size)

Code	Dimensions (case size) [mm]
168	1.6×0.8
316	3.2×1.6
083	8.0×3.0
104	10.0×4.0
086	8.0×6.0

④Special code

Code	Special code
F	Inverted F
M	Mono pole
N	Mono pole (Dual)

⑤Frequency

Code (example)	Frequency [MHz]
1575	1574.397～1576.443
2450	2400～2500
5550	3100～8000

1.Describe Center Frequency
2.Lower Frequency for Dual band

⑥Spec code

Code	Spec code
01～	
S1～	Applicable to AH 104F

⑦Packaging

Code	Packaging
–T	Taping

■EXTERNAL DIMENSIONS / STANDARD QUANTITY

AH 168M type, AH 316M type

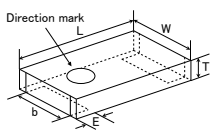

AH 083F type

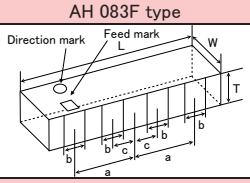

AH 104F type

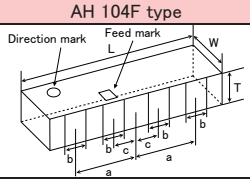

AH 104N type

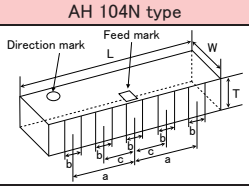

AH 086M type

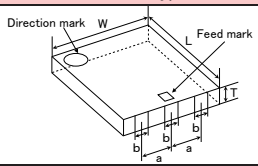

Type	L	W	T	E	a	b	c	Standard quantity [pcs]
AH 168M	1.6±0.1	0.8±0.1	0.65 Max	0.3±0.1	–	0.6±0.1	–	5000
AH 316M	3.2±0.15	1.6±0.15	0.5±0.1	0.5±0.2	–	1.0min.	–	3000
AH 083F	8±0.3	3±0.3	1±0.3	–	3.1±0.3	1±0.3	1.15±0.3	1000
AH 104F	10±0.3	4±0.3	1±0.3	–	2.5±0.3	1±0.3	1±0.3	2000
AH 104N	10±0.3	4±0.3	1±0.3	–	3±0.3	0.8±0.3	1.5±0.3	2000
AH 086M	8±0.3	6±0.3	1±0.3	–	1.8±0.2	1±0.3	–	1000

Unit : mm

■PARTS NUMBER

Applications	Part number	External dimensions (L×W×T) [mm]	Center frequency [MHz]
GPS	AH 316M157501	3.2×1.6×0.5	1575
W-LAN (2.4GHz)	AH 168M245001	1.68×0.8×0.65 Max.	2450
Bluetooth®	AH 316M245001	3.2×1.6×0.5	2450
WiMAX (2.5GHz)	AH 083F245001	8.0×3.0×1.0	2450
ZigBee	AH 104F2450S1	10.0×4.0×1.0	2450
	AH 104F2650S1	10.0×4.0×1.0	2650
W-LAN (2.4GHz/5GHz)	AH 104N2450D1	10.0×4.0×1.0	2450/5400
UWB & WiMAX (3.5GHz)	AH 086M555003	8.0×6.0×1.0	5550

▶ This catalog contains the typical specification only due to the limitation of space. When you consider the purchase of our products, please check our product specification sheets. For details of each product (characteristics graph, reliability information, precautions for use, and so on), see our website (http://www.ty-top.com/) .

■ELECTRICAL CHARACTERISTICS / TYPICAL CHARACTERISTICS

Typical characteristics on TAIYO YUDEN evaluation board

●AH 316M157501

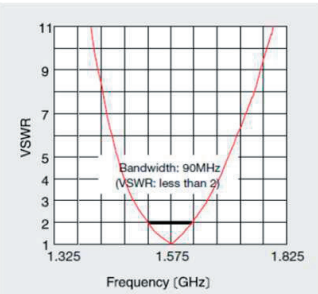

Typical characteristics of VSWR

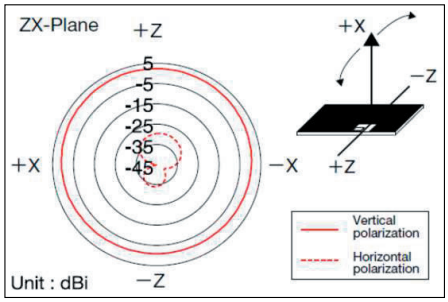

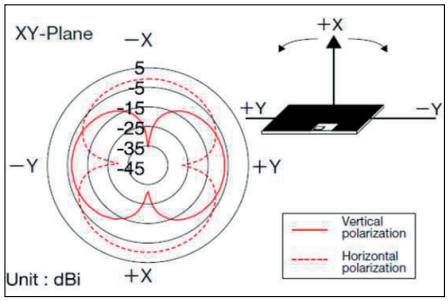

Typical characteristics of radiation pattern (@1.575GHz)

●AH 168M245001

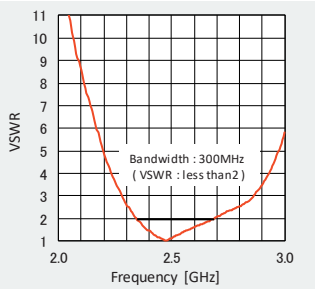

Typical characteristics of VSWR

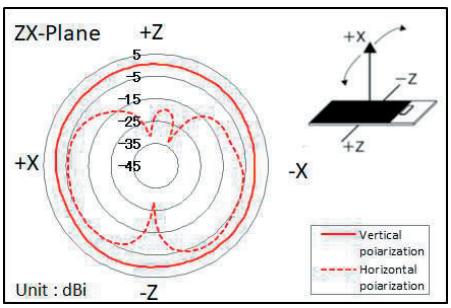

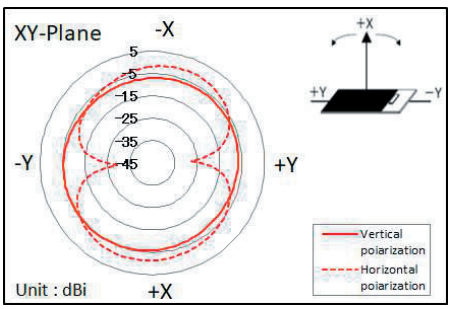

Typical characteristics of radiation pattern (@2.45GHz)

●AH 316M245001

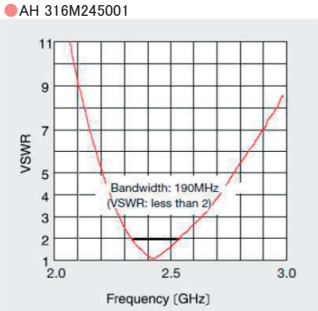

Typical characteristics of VSWR

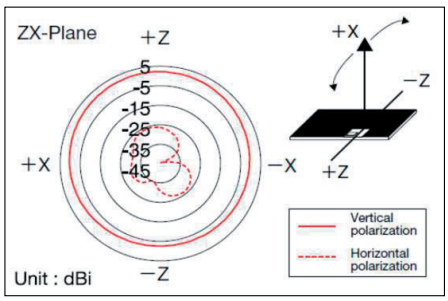

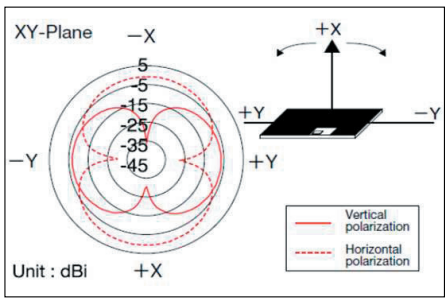

Typical characteristics of radiation pattern (@2.45GHz)

●AH 083F245001

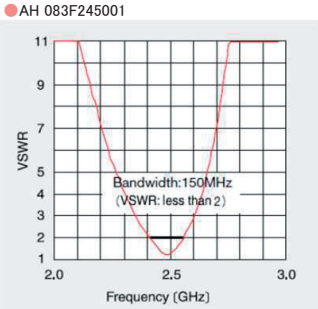

Typical characteristics of VSWR

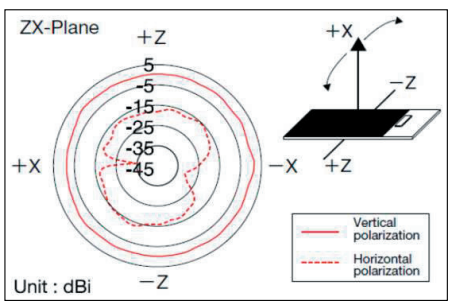

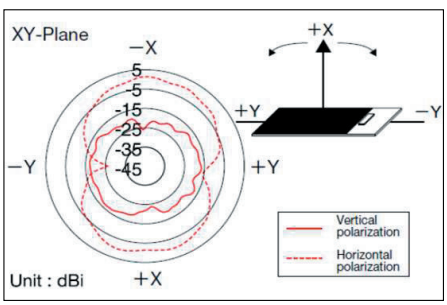

Typical characteristics of radiation pattern (@2.45GHz)

▶ This catalog contains the typical specification only due to the limitation of space. When you consider the purchase of our products, please check our product specification sheets. For details of each product (characteristics graph, reliability information, precautions for use, and so on), see our website (http://www.ty-top.com/) .

■ELECTRICAL CHARACTERISTICS / TYPICAL CHARACTERISTICS

Typical characteristics on TAIYO YUDEN evaluation board

●AH 104F2450S1

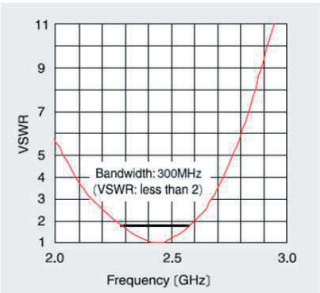

Typical characteristics of VSWR

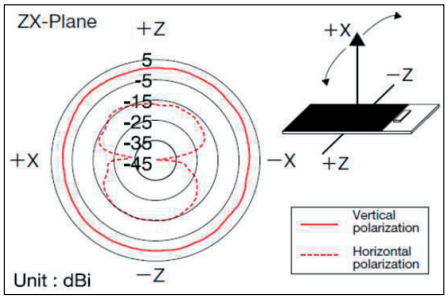

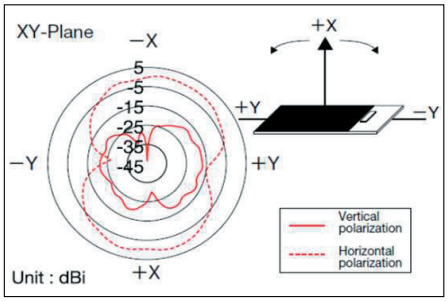

Typical characteristics of radiation pattern (@2.45GHz)

●AH 104N2450D1

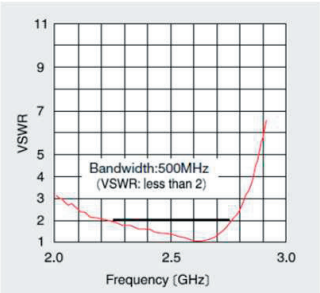

Typical characteristics of VSWR(2GHz band)

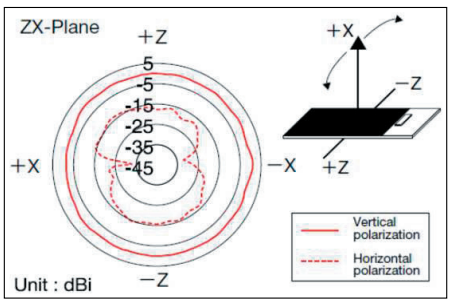

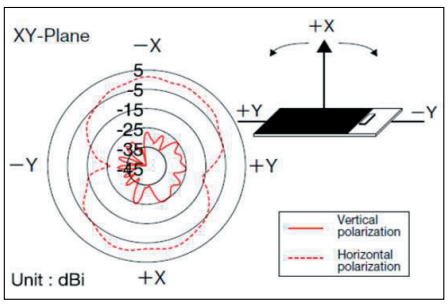

Typical characteristics of radiation pattern (@2.45GHz)

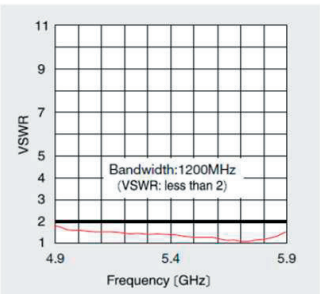

Typical characteristics of VSWR(5GHz band)

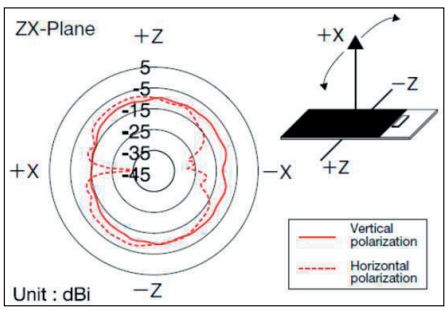

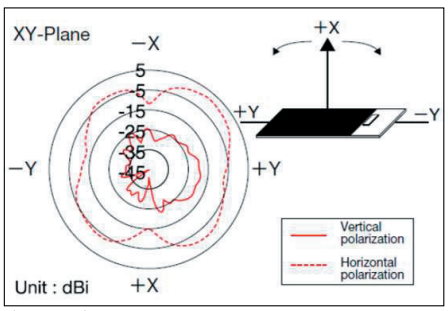

Typical characteristics of radiation pattern (@5.25GHz)

●AH 086M555003

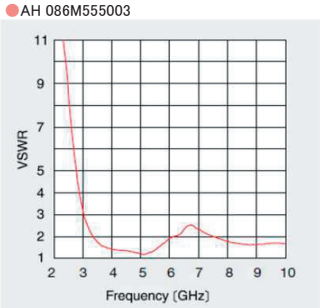

Typical characteristics of VSWR

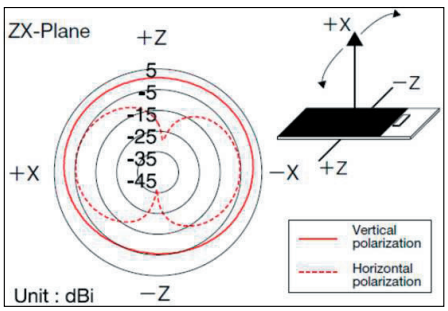

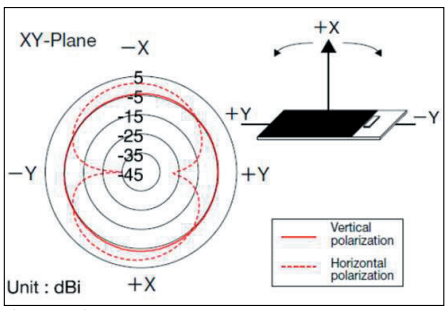

Typical characteristics of radiation pattern (@3.96GHz)

HIGH FREQUENCY PRODUCTS

▶ This catalog contains the typical specification only due to the limitation of space. When you consider the purchase of our products, please check our product specification sheets. For details of each product (characteristics graph, reliability information, precautions for use, and so on), see our website (http://www.ty-top.com/) .

■PACKAGING

①Minimum Quantity

Type	Standard Quantity (pcs) Embossed Tape
AH104F, AH104N	2000
AH316M	3000
AH083F, AH086M	1000
AH168M	5000

②Tape Material

●Embossed Tape

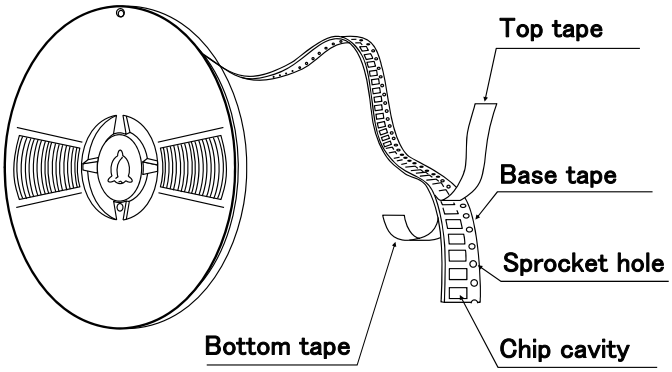

●Card Board Cattier Tape

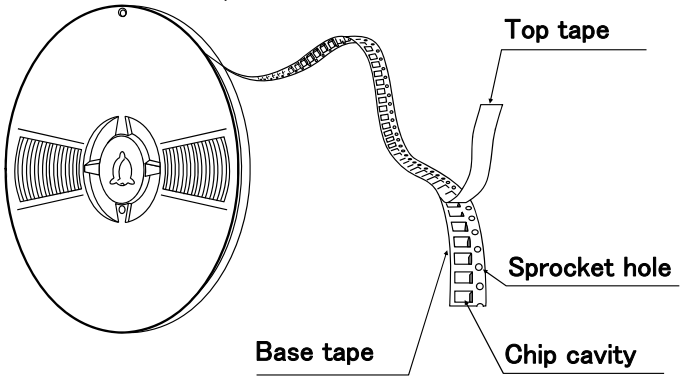

Chip Filled

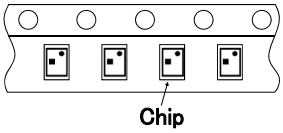

③Taping Dimensions

●Embossed Tape

Unit : mm (inch)

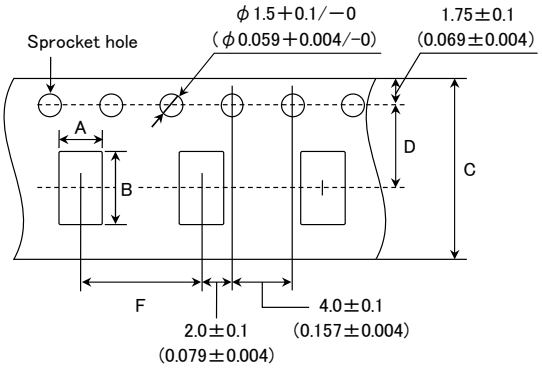

Type	Chip Cavity		Tape Widthness		Insertion Pitch	Tape Thickness max.	
	A	B	C	D	F	K	T
AH316M	1.9±0.2 (0.075±0.008)	3.5±0.2 (0.138±0.008)	8±0.2 (0.315±0.008)	3.5±0.1 (0.138±0.004)	4±0.1 (0.157±0.004)	0.85 (0.033)	0.3 (0.012)
AH083F	3.35±0.2 (0.132±0.008)	8.35±0.2 (0.329±0.008)	16±0.3 (0.630±0.012)	7.5±0.1 (0.295±0.004)	8±0.1 (0.315±0.004)	1.45 (0.061)	0.3 (0.012)
AH104F, AH104N	4.35±0.2 (0.171±0.008)	10.35±0.2 (0.407±0.008)	24±0.3 (0.945±0.012)	11.5±0.1 (0.435±0.004)	8±0.1 (0.315±0.004)	1.45 (0.061)	0.3 (0.012)
AH086M	6.25±0.2 (0.246±0.008)	8.26±0.2 (0.325±0.008)	16±0.3 (0.630±0.012)	7.5±0.1 (0.296±0.004)	12±0.1 (0.473±0.004)	1.3 (0.051)	0.3 (0.012)

Unit : mm (inch)

▸ This catalog contains the typical specification only due to the limitation of space. When you consider the purchase of our products, please check our specification.
For details of each product (characteristics graph, reliability information, precautions for use, and so on), see our Web site (http://www.ty-top.com/) .

Paper tape 0.315 inches wide

Unit : mm (inch)

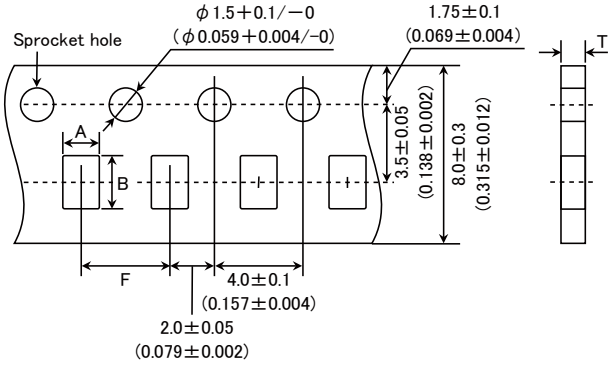

Type	Chip cavity		Insertion Pitch	Tape Thickness max.
	A	B	F	T
AH168M	0.95±0.05 (0.037±0.002)	1.80±0.05 (0.071±0.002)	4.0±0.1 (0.157±0.004)	0.80 (0.031)

Unit : mm (inch)

④Leader and Blank Portion

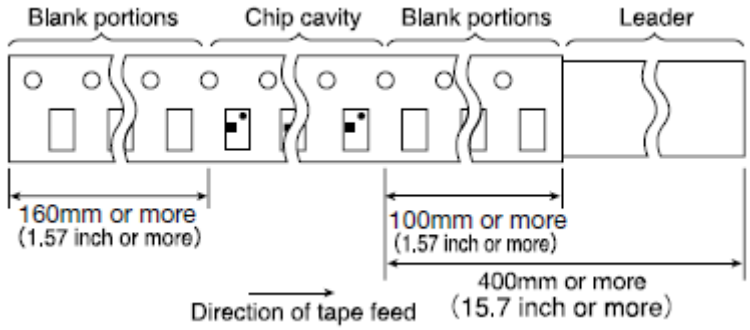

⑤Reel size

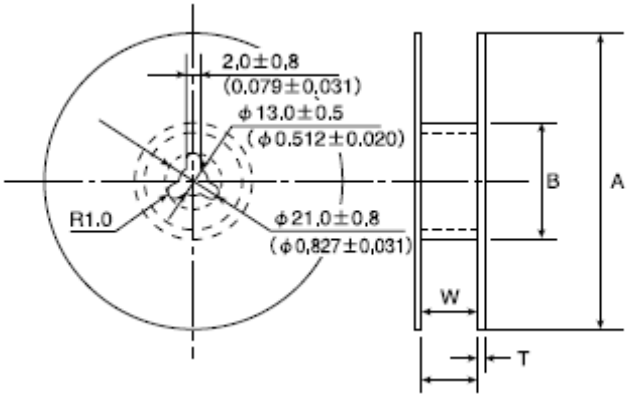

Type	A	B	W	T
AH168M AH316M	178±2.0 (7.0±0.08)	50 min. (2.0 min.)	10.0±1.5 (0.394±0.06)	3.0 max. (0.12 max.)
AH083F	178±2.0 (7.0±0.08)	50 min. (2.0 min.)	17.0±1.0 (0.67±0.04)	2.5 max. (0.1 max.)
AH104F AH104N	330±2.0 (13.0±0.08)	100±1.0 (3.94±0.04)	25.5±1.0 (1.0±0.04)	3.0 max. (0.12 max.)
AH086M	330±2.0 (13.0±0.08)	100±1.0 (3.94±0.04)	17.0±1.0 (0.67±0.04)	2.5 max. (0.1 max.)

Unit : mm (inch)

⑥Top Tape Strength

The top tape requires a peel-off force of 0.1～0.7N in the direction of the arrow as illustrated below.

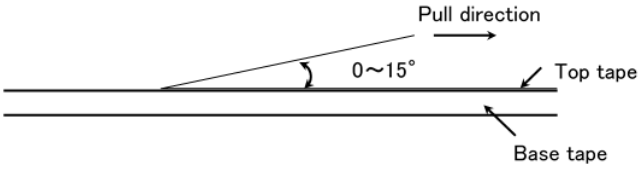

▸ This catalog contains the typical specification only due to the limitation of space. When you consider the purchase of our products, please check our specification.
For details of each product (characteristics graph, reliability information, precautions for use, and so on), see our Web site (http://www.ty-top.com/) .

■RELIABILITY DATA

1. Operating Temperature Range	
Specified Value	−40～＋85℃

2. Storage Temperature Range	
Specified Value	−40～＋85℃
Test Methods and Remarks	※with being taped, −20～＋40℃

3. Solderability	
Specified Value	At least 75% of immersed terminal surface is covered by new solder.
Test Methods and Remarks	Solder temperature : 240±5℃ Duration : 3±1 sec. Preconditioning : Preheating at 150℃ after immersion into flux.

4. Thermal Shock	
Specified Value	Shall satisfy required VSWR value of individual specifications for each item.
Test Methods and Remarks	1 hour of recovery after 10 times of 30min.immersion alternately at −40℃ and 85℃ of temperature, followed by evaluating electrical characteristics.

5. High Temperature Storage Test	
Specified Value	Shall satisfy required VSWR value of individual specifications for each item.
Test Methods and Remarks	1 hour of recovery under standard condition after 96 hours recovery with 85℃ of temperature, followed by evaluating electrical characteristics.

6. Low Temperature Storage Test	
Specified Value	Shall satisfy required VSWR value of individual specifications for each item.
Test Methods and Remarks	1 hour of recovery under standard condition after 96 hours recovery with −40℃ of temperature, followed by evaluating electrical characteristics.

7. Humidity Storage Test	
Specified Value	Shall satisfy required VSWR value of individual specifications for each item.
Test Methods and Remarks	1 hour of recovery under standard condition after 96 hours recovery with 60℃ of temperature, 90～95% relative humidity followed by evaluating electrical characteristics.

8. Resistance to Reflow	
Specified Value	Shall satisfy required VSWR value of individual specifications for each item.
Test Methods and Remarks	Two times of reflow soldering by recommended profile attached, followed by evaluating electrical characteristics.

■PRECAUTIONS

1. PCB Design

Precautions

◆Land pattern design

Please do not arrange the surface and inside layer pattern near the antenna mounting area.

Technical Considerations

◆Land pattern design (Land pattern dimension examples and recommended antenna land pattern)

AH168M

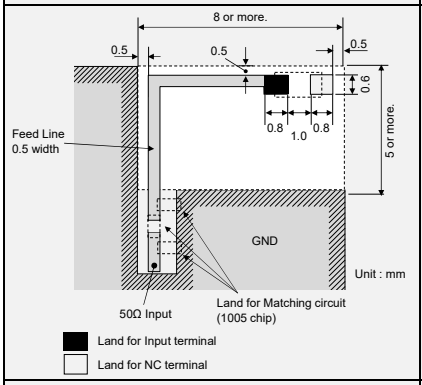

AH316M

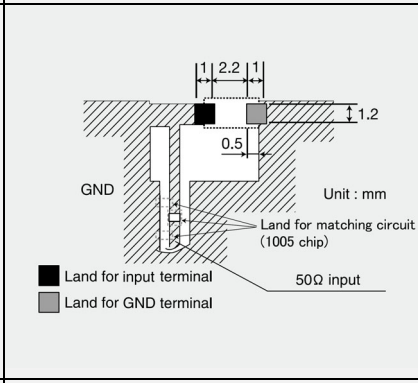

AH083F

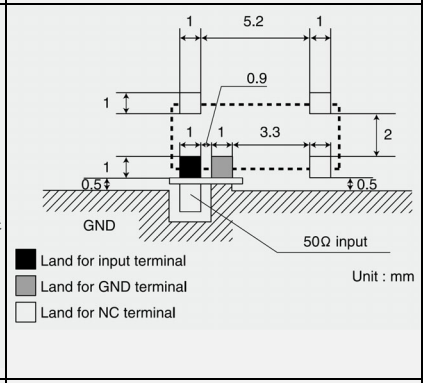

AH104F

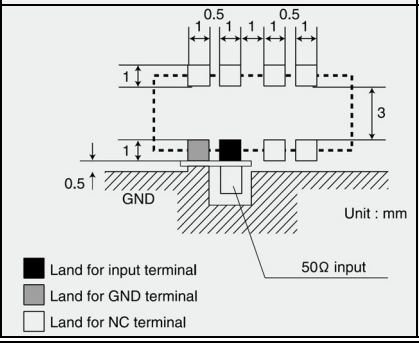

AH104N

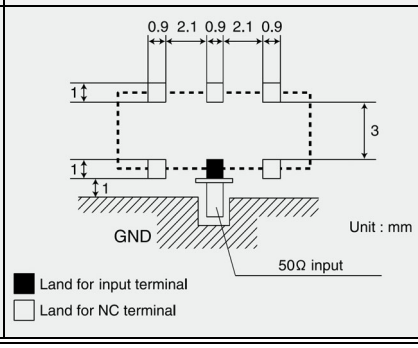

AH086M

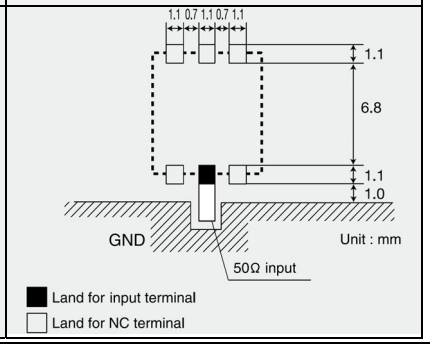

2. Soldering

Technical Considerations

◆Conditions of Reflow soldering (for reference)

・ Pb Free Reflow Profile

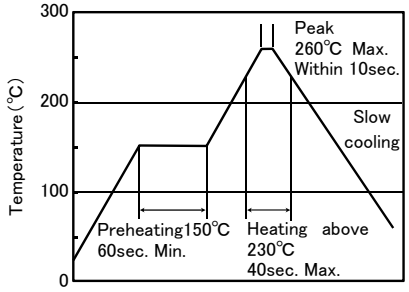

※ Components should be preheated to within 100 to 130℃ from soldering temperature.

※ Assured to be reflow soldering for 2 times.

Note : The above profiles are the maximum allowable soldering condition, therefore these profiles are not always recommended.

3. Storage Conditions

Precautions

◆Storage conditions

1. The Products must not be used in the following environments :
   - exposure to special gases such as (C12, NH3, SOx, NOx)
   - exposure to volatile gas or inflammable gas
   - exposure to a lot of dust
   - exposure to water or condensation
   - exposure to direct sunlight or freezing
2. The Products should be kept in the following conditions :
   - Temperature : －10～＋40℃
   - Humidity : 15～85%RH max.
3. The products should be used within 6 months after delivery. In case of storage over 6 months, solderability shall be checked before actual usage.

■ Please contact our offices for further details of specifications.
All of the standard values listed here are subject to change without notice due to technical improvements.
Therefore, please check the specifications carefully before use.