76-81GHz FMCW Radar Level Transmitter

Operation Manual

VER:230809

1. Product introduction

1. 1 Feature

80G water level meter product refers to the frequency modulated continuous wave (FMCW) radar product operating at 76-81 GHZ. The maximum range of the product can reach 35m, and the blind zone is within 10 cm. Because it has higher operating frequency, larger bandwidth and higher measurement accuracy. The product provides the fixing method of the bracket and the installation method of the thread, lithium battery power supply or external power supply, a variety of communication options, simple on-site wiring makes the installation convenient and easy.

Major advantage:

- Millimeter wave RF chip, achieve more compact RF architecture, higher signal-to-noise ratio, smaller blind zone.
- 5GHz working bandwidth means higher measurement resolution and accuracy.
- 6° antenna beam angle, so the interference in the environment has less impact on the instrument and the installation is more convenient.
- Integrated design, small size.
- Low continuous operation, life span is more than 3 years.
- Support Bluetooth debugging to facilitate on-site personnel maintenance work.

1.2 Selection Help

According to the signal output form, the selection is as follows

Table 1－1 Selection Table

UNIT		CODE	Parameters
Lens		A	With Lens, Beam angle 8°
		B	With Lens, Beam angle 6°
Communication Mode	Beam angle 6°	R	RS485
		G	4G Note
		L	LoRa
	Beam angle 8°	A	2W(4～20)mA/Bluetooth
		H	2W(4～20)mA/HART/Bluetooth
		Y	Special Terms
Mounting Bracket		W	With Bracket
		N	without Bracket
Measuring Range		1	15m
		2	30m/35m
Cable length		1	5m
		2	10m
		Y	Special Terms
Special Terms		Y	Special Terms

2. Technical Specifications

Table2－1 Technical Specifications

Frequency Range	76GHz~81GHz
Measuring Range	0.1 m ~30m/35m
Accuracy	±3mm
Beam Angle	6°， 8°
Power supply range	RS485： 12~30VDC， Current：18~30VDC
Communication Mode	485/HART
Working Temperature	-40~70℃
Housing Material	A:PE, B:Engineering plastics
Antenna Type	Lens
Protection Grade	IP67
Installation Methods	Bracket , thread G1 1/2

3. Structural Dimension

Product Overall(A Type):

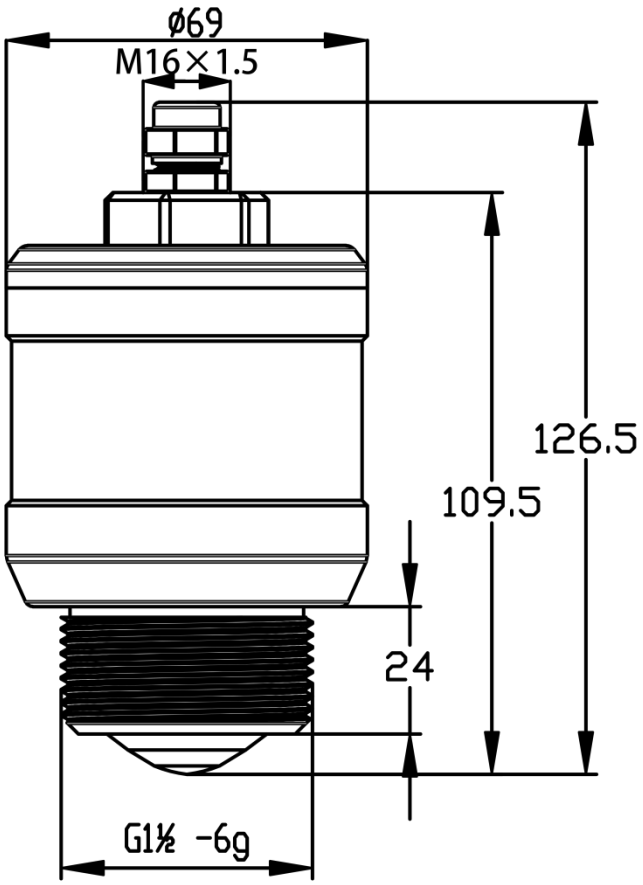

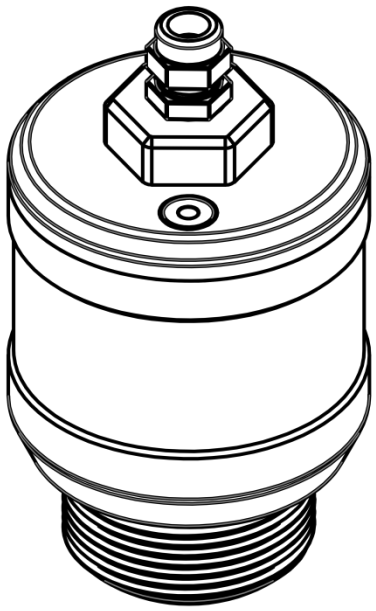

Product Overall(B Type):

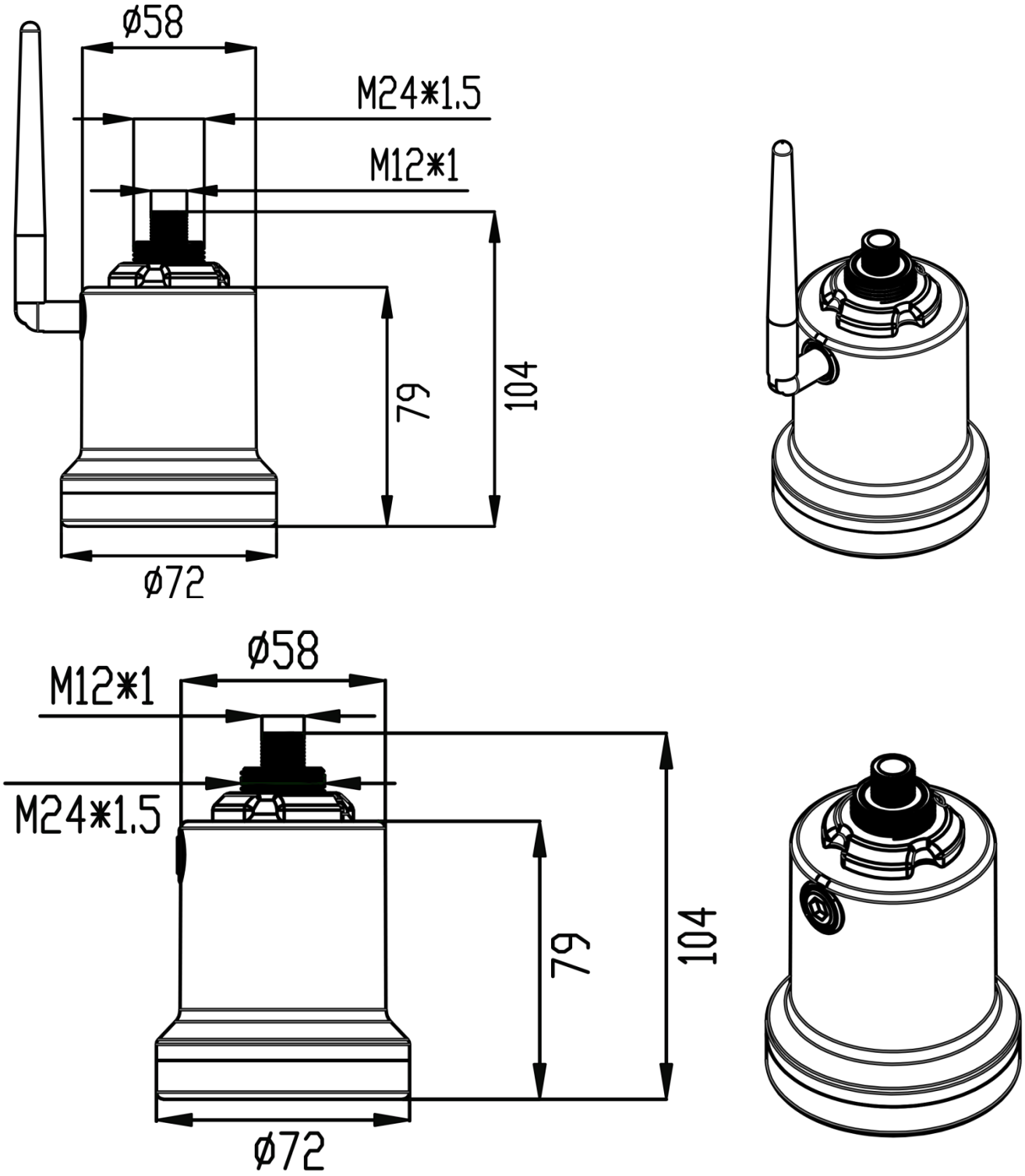

Fig.3－1 Diagram of instrument structure size

4. Installation

Considerations when installing:

(1) Ensure the instrument is perpendicular to the water surface.

(2) Avoid the emission beam exposure to the jamming object, which will produce a false echo.

Seethe following points for the typical working conditions.

- Ensure the radar level transmitter is installed perpendicular to the water surface, and the tilt will weaken the signal amplitude and affect the normal range.

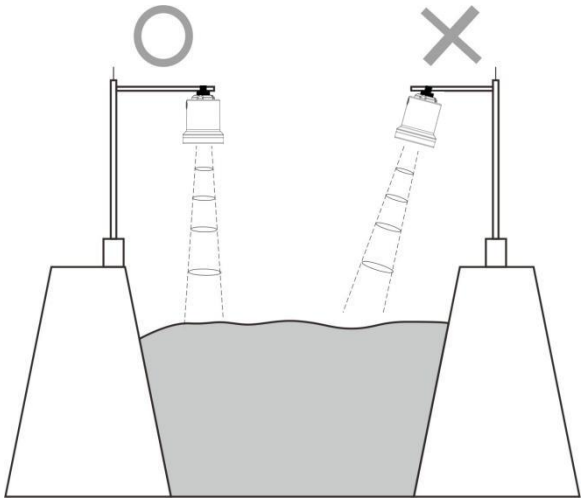

Fig.4 – 1 Diagram of the instrument installation location

- Ensure that there are no interference within the beam range, such as the river bank.

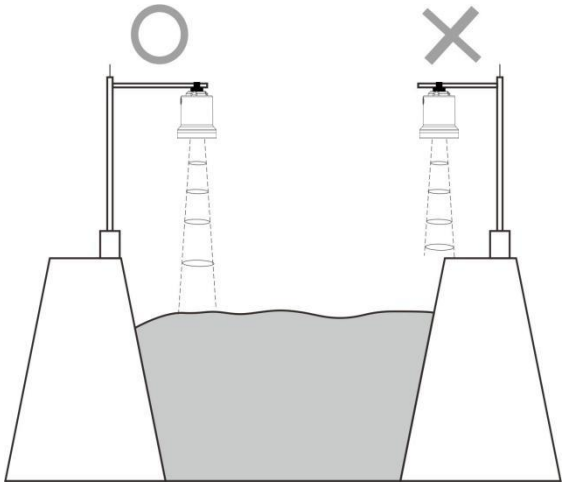

Fig.4 – 2 Diagram of the instrument installation location

■ The instrument is installed at least 20cm away from the side wall, and the underground pipe network is installed as closer to the center of the well, otherwise the well will generate interference signals, which will affect the measurement, as shown in Fig. 4-3.

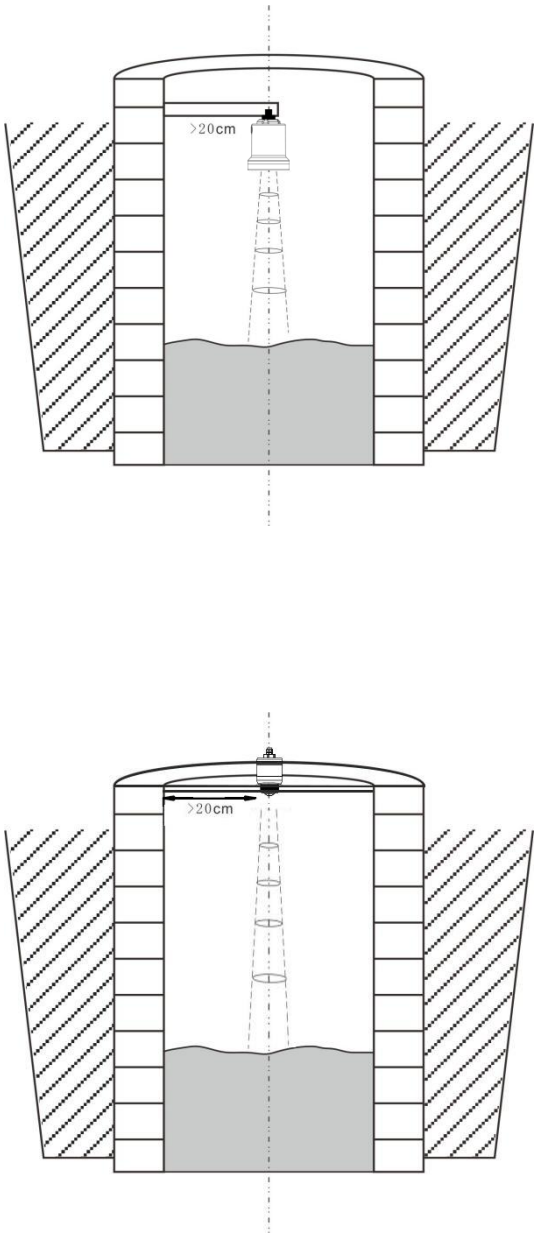

Fig. 4－3 Installation is at least 20cm away from the wall

5. Connection

5. 1 Wireless transmission

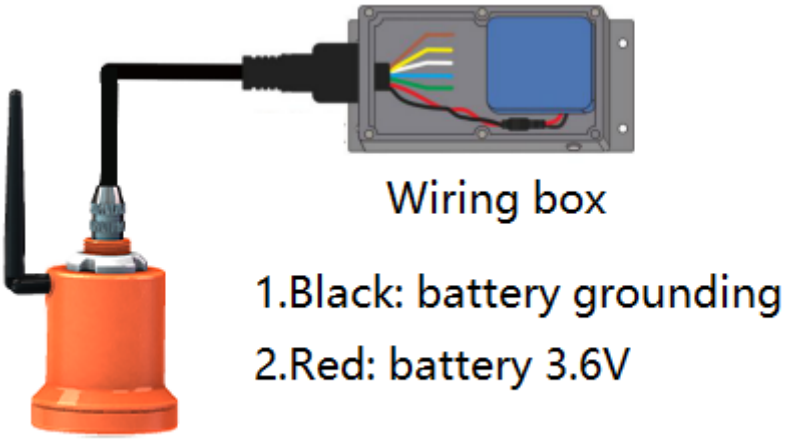

Fig 5 – 3 Product Wiring Diagram

When the user selects the wireless transmission with battery, the radar level transmitter leads the 4-core wire through the waterproof junction to connects the junction box according to the line order in the figure. The numbers 1 and 2 are connected to the battery, and the numbers 3 and 4 can be sealed in the battery box (Waterproof grade IP68). Note that the power supply voltage of the device is within the range of 3.6V-5V. Other supply voltages can be customized.

5. 2 RS485

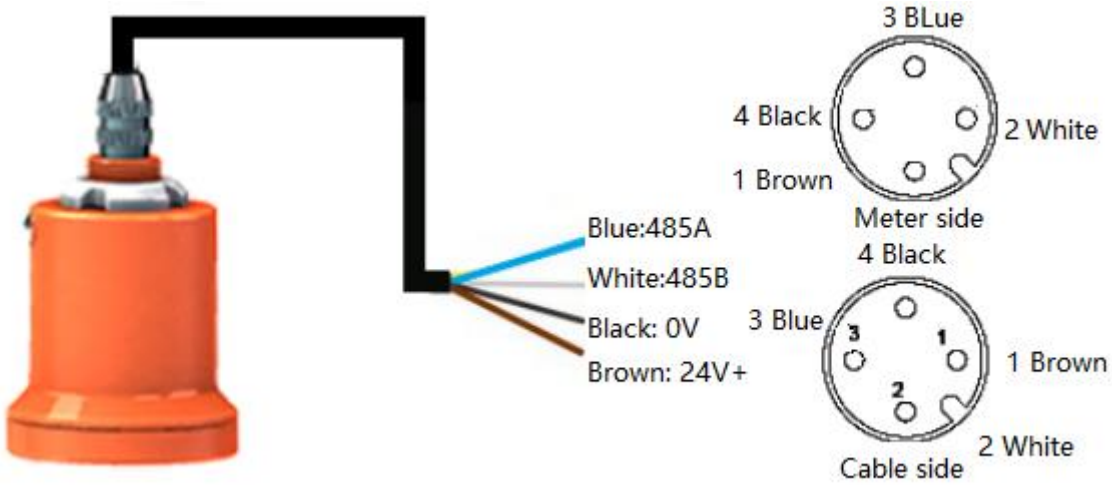

Fig.5 – 5 Product Wiring Diagram

When the user uses RS485 transmission, the radar level transmitter leads out four lines through the waterproof joint to connect the user's product in the line order, and the length of the cable line can be customized according to the user needs. Serial port parameters: RS485, baud rate- -9600, data bit- -8, stop bit- -1, check bit- -none.Note that the equipment supply voltage is within 9V--30V range, and it is recommended to supply 12V.

5.3 （4～20）mA

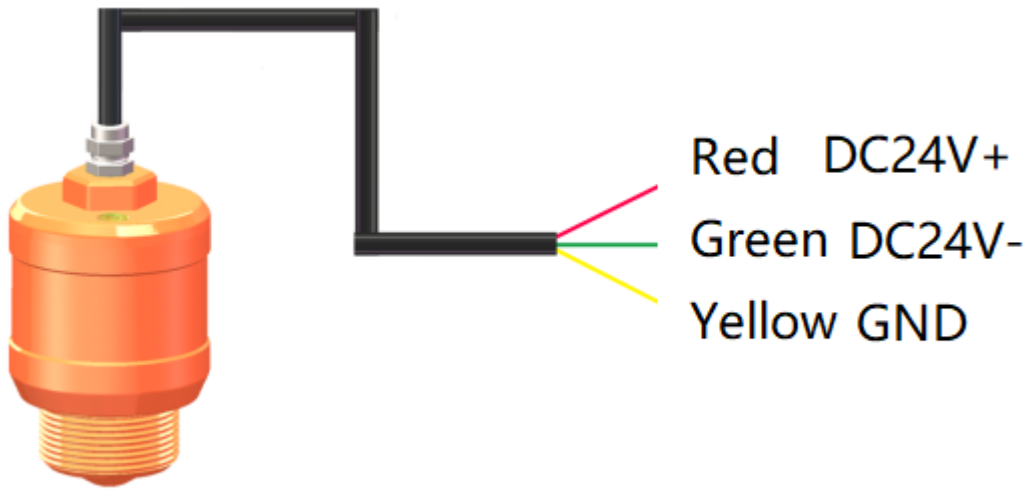

Fig.5－6 Product Wiring Diagram

6. Operation of the radar level transmitter

6. 1 Parameter Description

6. 1. 1 [Min Adjustment]

[Min adjustment] is the low calibration point, see the figure below for specific definitions.

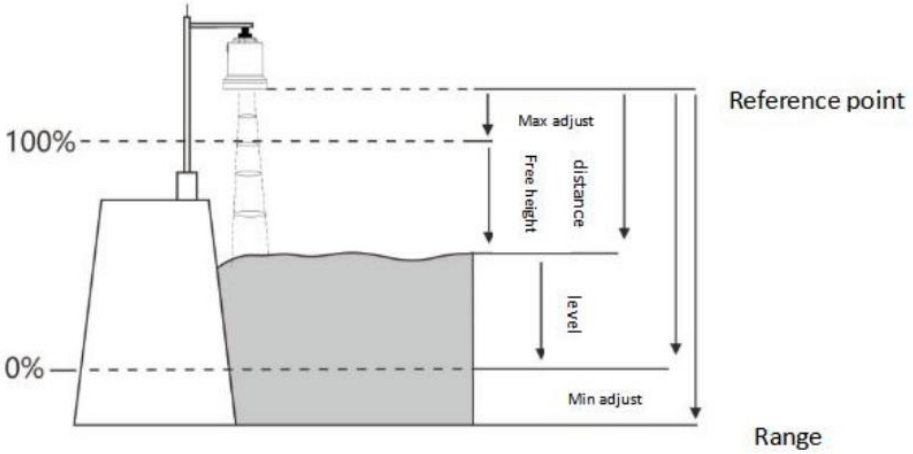

Fig 6－1 Min adjustment editing interface and definition

Table 6－1 Min Adjustment Description

Parameter Name	**Min adjustment**
Parameter range (m)	0.1~**measuring range**
Default value (m)	30/35
Association configuration	If sets **Min adjustment** <**Max adjustment**+0.1，then **Min adjustment** =（**Max adjustment**+0.1）
Special matters	**Min adjustment** is independent of the **measuring range**, it only affects the calculation of the material level.

6. 1. 2 [Max Adjustment]

[Max adjustment]means high calibration point, refer to Fig. 6-10 for specific meaning.

Table 6－2Max Adjustment Description

Parameter Name	**Max adjustment**
Parameter range (m)	0～（**Min adjustment**-0.1）
Default value (m)	0
Association configuration	If sets **Max adjustment** >（**Min adjustment**-0.1），then **Max adjustment =**（**Min adjustment**-0.1）
Special matters	**Max adjustment** is independent of the blind zone，it only affects empty height.

6.1.3 [Measuring Range]

In order to obtain the correct measurement results, the range of the instrument needs to be set, and the specific meaning is shown in the table。

Table 6－3 Measuring Range Description

Parameter Name	**Measuring Range**
Parameter range (m)	1~30/35
Default value (m)	30
Association configuration	If sets measuring range <（blind zone+0.1m），then it is automatically set to (blind zone+0.1m)
Option significance	Processing of the algorithm ignores the echo outside the range, and reasonably setting the range can avoid multiple reflection interference and the interference signal outside the possible range.
Special matters	This range does not refer to the remote measurement limit of the instrument and is only used as the limited algorithm area.

Note: The blind zone and range determine the specific range of the algorithm application, which can be set reasonably to avoid interference and false echoes to achieve fast and stable measurement。

6.1.4 [Damping filter]

[Damping time]is used to smooth the sudden changes in the measurement results, that is, the damping filter. For example, if the damping time is 2 seconds, the measured object position changes step by step at time t, and the measurement output value will slowly change. In the first 2 seconds, 63.2% of the change is completed, and in the 10th second (5 times Setting value) follow to the actual

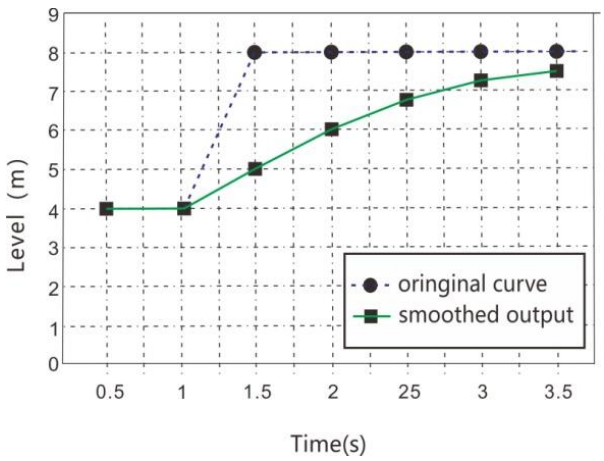

position, as shown in the figure below.

Fig.6－4 Damping time editing interface and meaning

Table 6－1 Damping Time Description

Parameter Name	Damping time
Parameter range (S)	0 ~600
Default value (S)	0
Association configuration	None
Option significance	Damping output to improve signal stability
Special matters	This parameter is not used due to short measurement time

6.1.5 [Distance Offset]

[Distance Offset]is used to correct the reference point of the sensor. The default reference point of the instrument is calibrated to the position shown in point a in the figure below when it leaves the factory. If you want to adjust the reference point down to point b, enter h1 in the settings.

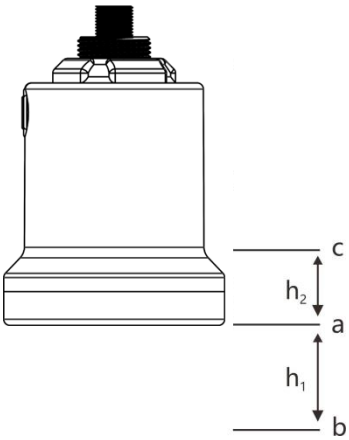

Fig.6－5 Distance offset editing interface

Table 6－5 Distance offset description

Parameter Name	Distance Offset
Parameter range (m)	-The built-in offset)~10m
Default value (m)	0
Association configuration	**None**
Option significance	Correct the reference point zero of the sensor. The range of sensor output value is still between [Blind Zone]~[Measuring Range], and the actual sensor measurement range is normalized to the initial reference point: [Distance Offset + Blind Zone] ~ [Distance Offset + Measuring Range]
Special matters	

6.1.6 [Blind Zone]

See the table below for the details.

Table 6－6 Blind Zone Description

Parameter Name	Blind zone
Parameter range (m)	0~（**Measuring range**-0.1）
Default value (m)	0
Association configuration	If sets blind zone >（measuring range-0.1），then blind zone=（measuring range-0.1）
Option significance	The algorithm will ignore the echo within the blind zone, and this option can be used to avoid near-end interference.
Special matters	This blind area does not refer to the proximal measurement limit of the instrument and is only used as a limited algorithm area. Instrument measurement limits are shown in the Technical Specification section.

7. Problem Diagnosis

Phenomenon	Possible Cause	Treatment measures

8. Appendix B: glossary

Beam Angle: The beam width that is 3dB lower than the maximum value as the limit. The beam angle is 6° or 8°, as shown in Fig.10-1.

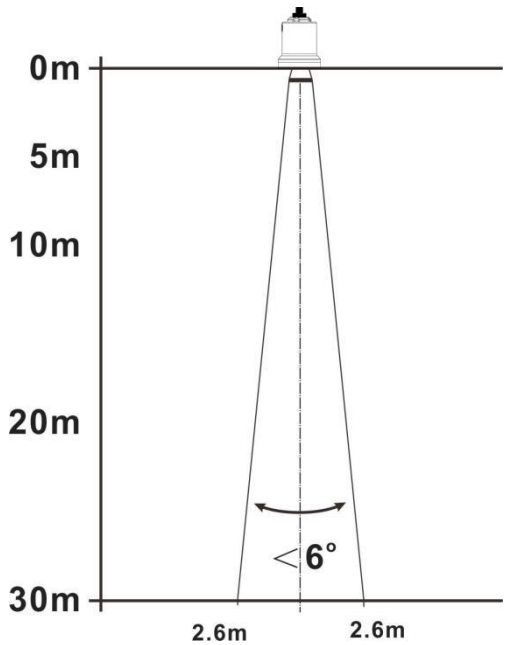

Fig.10－1 Diagram of the space geometry of the radar beam of the instrument

Range resolution: The range resolution refers to how far apart two objects close together, the level radar can distinguish two objects instead of one and can measure their respective distances. If the distance between two objects is less than the range resolution of the level radar, the radar can only measure one distance value, which is not equal to the distance value of any one of them, but the

combination of the distance values of the two objects. The frequency modulation bandwidth is B=5GHz, and the minimum distance resolution=light speed/working bandwidth/2≈3cm.

Measurement accuracy: If there is only one object and this object has moved a small distance, whether the level radar can recognize the distance change. The index that distinguishes the moving distance of a single object is called accuracy. The intermediate frequency signal is analyzed by its own algorithm, and the measurement accuracy is 0.5mm.

Blind zone: （1）Refers to the measurement limit of the near end of the meter, the instrument cannot measure in the blind zone.

Echo: the reflected signal received by the radar.

Launch cone: the extension of the antenna beam angle.

False echo: Any echo that is not generated by the desired target. Generally speaking, false echoes are generated by obstacles in the container.。

Multiple echoes: multiple reflection echoes appearing at the target echo distance, which may be 2 times or 3 times.

Measuring range: (1) Refers to the farthest measurement limit of the instrument (2) Specially, refers to the farthest distance artificially set, beyond this distance, the instrument is not considered when processing data.

Repeatability: the degree of deviation of multiple measurements of the same variable under the same conditions.

Threshold curve: A curve that changes with time. As a threshold, echoes exceeding it are considered valid.

9. Communication protocol

1、water level transmitter adopts serial port communication, and

The default parameters are as follows：

Communication parameters	Serial port level	Baud Rate /bps	Parity check	Data length /bit	Stop bit /bit
Serial port	TTL/RS485	9600	None	8	1

Communication protocol format

The water level meter uses Modbus RTU communication protocol for external communication, and each complete data frame contains: address field, function code, data and verification. The check is the CRC16 check data of the data frame, with the low byte before and the high byte after.

2、 Query measurement result instruction

Request command：

Device Address	Function code	Start Address	Number of registers	CRC
0x01(default)	**0x04**	**0x0A 0F**	**0x00 02**	**0x42 10**

Reply data:

Device Address	Function code	Data Length	Data	CRC
0x01	**0x04**	**0x04**	**0xXX XX XX XX**	**0xXX XX**

Data definition: The data value is Float type data, and the unit is meter.

The data length value is 4 bytes, and the data format is the low 16-bit

data first and the high 16-bit data last. The meaning of the measurement

result is related to [Measurement Type], and the default is water level.

FCC Warning

This device complies with Part 15 of the FCC Rules. Operation is subject to the following two conditions:
(1) This device may not cause harmful interference, and (2) this device must accept any interference received, including interference that may cause undesired operation.

NOTE 1: This equipment has been tested and found to comply with the limits for a Class B digital device, pursuant to part 15 of the FCC Rules. These limits are designed to provide reasonable protection against harmful interference in a residential installation. This equipment generates, uses and can radiate radio frequency energy and, if not installed and used in accordance with the instructions, may cause harmful interference to radio communications. However, there is no guarantee that interference will not occur in a particular installation. If this equipment does cause harmful interference to radio or television reception, which can be determined by turning the equipment off and on, the user is encouraged to try to correct the interference by one or more of the following measures:
- Reorient or relocate the receiving antenna.
- Increase the separation between the equipment and receiver.
-Connect the equipment into an outlet on a circuit different from that to which the receiver is connected.
-Consult the dealer or an experienced radio/TV technician for help.

NOTE 2: Any changes or modifications to this unit not expressly approved by the party responsible for compliance could void the user's authority to operate the equipment.

RF Exposure Statement
To maintain compliance with FCC'S RF Exposure guidelines, This equipment should be installed and operated with minimum distance of 20cm the radiator your body. This device and its antenna(s) must not be co-located or operation in conjunction with any other antenna or transmitter.

ISED Warning

This device complies with Innovation, Science and Economic Development Canada License exempt RSS standard(s). Operation is subject to the following two conditions: (1) this device may not cause harmful interference, and (2) this device must accept any interference received, including inter ference that may cause undesired operation of the device.

Le présent appareil est conforme aux CNR d' Innovation, Sciences et Développement économique Canada applicables aux appareils radio exempts de licence. L'exploitation est autorisée aux deux conditions suivantes :
(1) l'appareil nedoit pas produire de brouillage, et
(2) l'utilisateur de l'appareil doit accepter tout brouillage radioélectrique subi, même si le brouillage est susceptible d'en compromettre le fonctionnement.

The device is compliance with RF exposure guidelines, users can obtain Canadian information on RF exposure and compliance.

Le présent appareil est conforme
Après examen de ce matériel aux conformité ou aux limites d’intensité de champ RF, les utilisateurs peuvent sur l’exposition aux radiofréquences et compliance d’acquérir les informations correspondantes.