Quilt

Heat Pump System
User Manual

Dial Model QD1
Sense Model QS1
Heat Pump Model QIO1-M2Z18

Table of Contents

Table of Contents 1
Privacy 3
Safety 3
Warning 3
Avertissement (Français) 5
Caution 7
Description of Pictograms 7
Parts Description 8
Quilt Indoor Unit 8
Indoor Unit Front Panel 9
Quilt Outdoor Unit 9
Quilt Sense 10
Quilt Dial 11
System Overview 11
Indoor Unit 12
Outdoor Unit 14
Dial 14
Parts Installation 15
How to install and remove filters 15
How to install and remove the front panel 16
How to paint the front panel 20
How to install and remove the Quilt Sense module 20
How to install the Quilt Dial 23
Parts you will need 23
Placing the Dial 23
Powering the Dial 24
Wall Mounting the Dial 26
Setup and pairing 32
Operations 34
Maintenance and Cleaning 41
Cleaning the Indoor Unit Filters 41
Cleaning the outside of the Indoor Unit and front panel 42
Cleaning the louvers 42
Cleaning the Outdoor Unit 42
Removing debris from the grate of the Outdoor Unit 42
Cleaning the Dial 43
Troubleshooting 43
Specifications 45

Compliance 49
Accessing the Compliance Information on the Quilt Dial 51

Privacy

Transparency and data security are fundamental to everything we do. We are committed to providing clear and concise information about how we utilize your data. We will always obtain your consent before sharing any personally identifiable information, such as your email address. We work hard to ensure the protection of your data. To learn more about our Privacy Policy, go to quilt.com/privacy-policy

Safety

Warning

- Installation of the appliance shall only be conducted by a qualified professional service technician unless otherwise stated in this manual. Please follow all precautions in the following sections during installation.
- During maintenance and cleaning you may be exposed to hazards including electricity, flammable gas under pressure, and sharp edges if the instructions in this manual are not followed. Please only perform the maintenance listed in this manual. All other maintenance and repair should be conducted by a qualified professional service technician.
- This appliance is not intended for use by persons (including children) with reduced physical, sensory or mental capabilities, or lack of experience and knowledge, unless they have been given supervision or instruction concerning use of the appliance by a person responsible for their safety.
- Children should be supervised to ensure that they do not play with the appliances.
- The refrigerant lines and other parts of the refrigerant circuit can get very hot. The insulation on any wire that is run next to the refrigerant lines must be rated to 230°F (110°C) or higher.
- Only the Outdoor Unit, refrigerant lines, and outdoor-to-indoor unit interconnect wire are rated for outdoor use. The Indoor Unit may only be installed indoors.
- The Quilt Indoor Unit requires a space of 8 x 38” (20 x 97 cm) on the wall with a minimum of 6” (15 cm) on the sides, a minimum of 2.5” (6.4 cm) to the ceiling and 7’ (213 cm) to the floor
- The Quilt Outdoor Unit requires an outdoor space of 38” x 16” x 28” (97 x 41 x 71 cm) with a minimum of 6” (15 cm) of clearance in the back, 78” (200 cm) in the front and 12” (30 cm) on the top without any obstructions. Keep 20” (50 cm) of clearance on the sides to allow for servicing.
- The Quilt Indoor Unit must be at least 3 feet away from a smoke detector
- The only approved refrigerant for the Quilt Heat Pump System is R32. The refrigerant is flammable and odorless. The flammability rating of the refrigerant is such that the

risk of fire is low. However, please take all necessary measures to avoid exposing any part of the equipment to a direct flame.

Your qualified professional service technician will ensure the following requirements are met:

- The Quilt Indoor Unit must be installed using the supplied bracket. The bracket will be affixed to the wall via a minimum of four drywall anchors rated for a load of 10 lbs (4.5 kg) each, four #8, 1¼” wood screws into a wooden stud or joist or a combination of the two.
- The Quilt Outdoor Unit must be anchored to a concrete pad, elevated base, or a metal wall bracket using anchors with a minimum pull-out force of 150 lbs (68 kg).
- The appliance must be installed according to the NEC (USA) or CEC (Canada).
- This appliance does not come with a disconnecting cord. Thus a disconnect switch or SWD/HID breaker rated for Category III - 300V, 4000V overvoltage transient needs to be installed to protect your home and your equipment.
- The outdoor unit will be connected directly to your electrical panel. A single phase 208 or 240 Volt circuit breaker rated to a minimum of 15A and maximum of 20A is required. The Indoor Unit is powered from the Outdoor Unit via an interconnect wire. This wire is run inside the refrigeration lineset cover along with the refrigerant lines. Your service technician will perform the electrical connections to your panel as well as in between the indoor and outdoor unit.

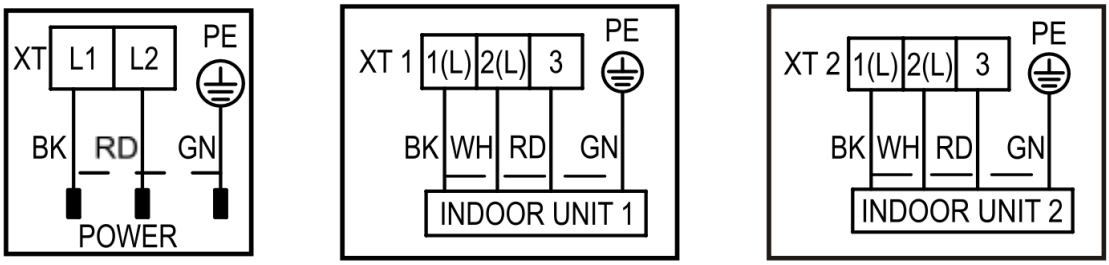

Wiring Diagram: Outdoor Unit

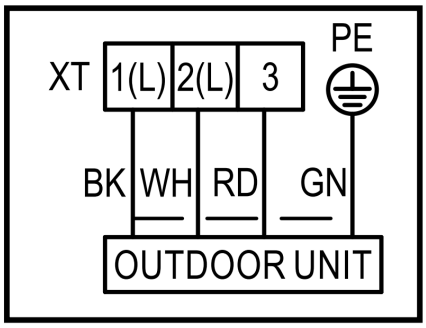

Wiring Diagram: Indoor Unit

- The Quilt Outdoor Unit comes pre-charged with 3.2 lbs (1450 grams) of R32 refrigerant. However, in some installations additional refrigerant must be added to the

refrigerant lines after the Indoor Unit and outdoor unit are connected together. This refrigerant is charged via the charging port which is located on the bottom of the outdoor unit underneath the refrigerant line cover. The total amount of refrigerant must not exceed 4 lbs (1842 grams). Your service technician will complete this step and write the total amount of refrigerant on the outdoor unit label.

- The Quilt Dial has a Type 1 Action per UL 60730-1: It performs no safety critical functions.
- The Quilt Dial is designed for Pollution Degree 2 (Indoor Use).

Avertissement (Français)

- L'installation de l'appareil doit être effectuée uniquement par un technicien de service professionnel qualifié, sauf indication contraire dans ce manuel. Veuillez suivre toutes les précautions décrites dans les sections suivantes lors de l'installation.
- Pendant l'entretien et le nettoyage, vous pouvez être exposé à des dangers, notamment à l'électricité, à des gaz inflammables sous pression et à des arêtes vives si les instructions de ce manuel ne sont pas suivies. Veuillez effectuer uniquement l'entretien répertorié dans ce manuel. Tous les autres travaux d'entretien et de réparation doivent être effectués par un technicien de service professionnel qualifié.
- Cet appareil n'est pas destiné à être utilisé par des personnes (y compris des enfants) ayant des capacités physiques, sensorielles ou mentales réduites, ou un manque d'expérience et de connaissances, à moins qu'elles n'aient été supervisées ou aient reçu des instructions concernant l'utilisation de l'appareil par une personne responsable de leur sécurité.
- Les enfants doivent être surveillés pour s'assurer qu'ils ne jouent pas avec les appareils.
- Seuls l'unité extérieure, les conduites de réfrigérant et le fil d'interconnexion de l'unité extérieure à l'intérieur sont conçus pour une utilisation en extérieur. L'unité intérieure ne peut être installée qu'à l'intérieur.
- L'unité intérieure Quilt nécessite un espace de 8 x 38" (20 x 97 cm) au mur avec un minimum de 6" (15 cm) sur les côtés, un minimum de 2,5" (6,4 cm) au plafond et 7' (213 cm) au sol
- L'unité extérieure Quilt nécessite un espace extérieur de 38" x 16" x 28" (97 x 41 x 71 cm) avec un minimum de 6" (15 cm) d'espace libre à l'arrière, 78" (200 cm) à l'avant. et 12" (30 cm) sur le dessus sans aucune obstruction. Gardez un espace libre de 20 po (50 cm) sur les côtés pour permettre l'entretien.
- L'unité intérieure Quilt doit être à au moins 3 pieds d'un détecteur de fumée.
- Le seul réfrigérant approuvé pour le système de pompe à chaleur Quilt est le R32. Le réfrigérant est inflammable et inodore. L'indice d'inflammabilité du réfrigérant est tel que le risque d'incendie est faible. Veuillez toutefois prendre toutes les mesures nécessaires pour éviter d’exposer une quelconque partie de l’équipement à une flamme directe.

Votre technicien de service professionnel qualifié veillera à ce que les exigences suivantes soient respectées :

- L’unité intérieure Quilt doit être installée à l’aide du support fourni. Le support sera fixé au mur via un minimum de quatre ancrages pour cloisons sèches évalués pour une charge de 10 lb (4,5 kg) chacun, quatre vis à bois n° 8 de 1¼" dans un montant ou une solive en bois ou une combinaison des deux.
- L'unité extérieure Quilt doit être ancrée à une dalle de béton, une base surélevée ou un support mural en métal à l'aide d'ancrages avec une force d'extraction minimale de 150 lb (68 kg).
- L'appareil doit être installé conformément au NEC (USA) ou au CEC (Canada).
- Cet appareil n'est pas livré avec un cordon de déconnexion. Ainsi, un sectionneur ou un disjoncteur SWD/HID classé pour les surtensions transitoires de catégorie III - 300 V, 4 000 V doit être installé pour protéger votre maison et votre équipement.
- L'unité extérieure sera connectée directement à votre panneau électrique. Un disjoncteur monophasé de 208 ou 240 volts évalué à un minimum de 15 A et un maximum de 20 A est requis. L'unité intérieure est alimentée par l'unité extérieure via un fil d'interconnexion. Ce fil passe à l’intérieur du couvercle des conduites de réfrigération avec les conduites de réfrigérant. Votre technicien de service effectuera les connexions électriques à votre panneau ainsi qu'entre l'unité intérieure et extérieure.

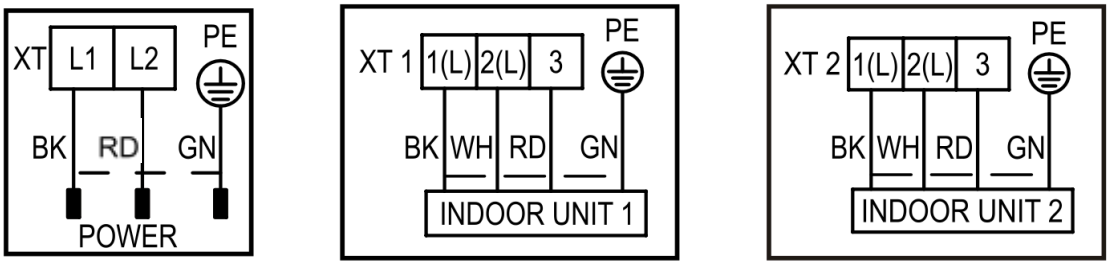

Schéma de câblage : unité extérieure

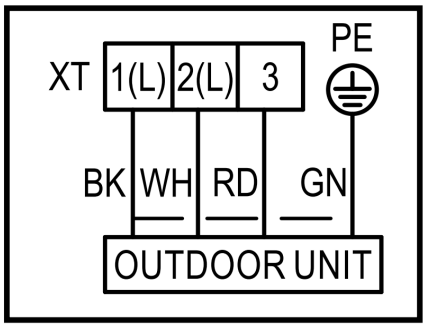

Schéma de câblage : unité intérieure

- L'unité extérieure Quilt est livrée préchargée avec 3,2 lb (1 450 grammes) de réfrigérant R32. Cependant, dans certaines installations, du réfrigérant

supplémentaire doit être ajouté aux conduites de réfrigérant une fois que l'unité intérieure et l'unité extérieure sont connectées ensemble. Ce réfrigérant est chargé via le port de charge situé au bas de l'unité extérieure, sous le couvercle de la conduite de réfrigérant. La quantité totale de réfrigérant ne doit pas dépasser 4 lb (1 842 grammes). Votre technicien de service terminera cette étape et inscrira la quantité totale de réfrigérant sur l'étiquette de l'unité extérieure.

- Le Quilt Dial a une action de type 1 selon UL 60730-1 : il n'effectue aucune fonction critique pour la sécurité.
- Le Quilt Dial est conçu pour un degré de pollution 2 (utilisation en intérieur).

Caution

- Do not turn the circuit breaker off during operation. This may create an arc flash, which can lead to a fire. Only attempt to turn the breaker off after the indoor unit is switched off using the app or Dial.
- Do not insert any object or body part into the air inlet or outlet. This may cause injury, since the fan inside rotates at high speed during operation.
- In case of abnormal operation, such as a burning smell, stop the heat pump and turn the breaker off. Continued operation in the abnormal state may cause damage to the equipment, fire, or electric shock. Call a certified technician for repair.
- When the heat pump does not cool or heat, you may have a refrigerant leak. Turn the heat pump off and call a certified technician for repair.
- The user should never attempt to clean the inside of the indoor unit. Should the inside of the unit require cleaning (such as the cooling fins on the heat exchanger), contact a certified technician.
- Using harsh chemicals to clean the outside of the unit may cause damage to the plastic or electrical components. This may result in water leaking outside the unit, equipment damage, release of noxious gasses or fire.
- Before cleaning the unit, switch it off and turn the breaker off. If this procedure is not followed, you may be injured as the fan inside rotates at high speeds during operation.
- Do not step on or place any object on the outdoor unit. You may be injured if you or the object falls.

Description of Pictograms

Throughout this manual and on the device itself you will encounter various pictograms depicting hazards or other noteworthy items. Please consult the table below for their meanings:

Pictogram	Meaning

	Dangerous high voltage is present. Do not access a compartment with this symbol
	A pressurized liquid or gas is present. Do not puncture or heat up with a flame.
	A flammable chemical or gas is present. Do not use open flames around the device.
	Indicates the User Manual should be read before performing an operation
	Indicates the Install & Service Manual should be read before performing an operation. A qualified professional should perform this operation.

Parts Description

Quilt Indoor Unit

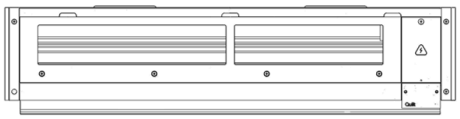

indoor unit

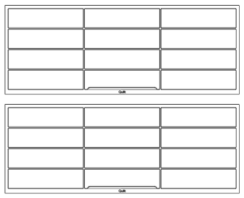

filter (2x)

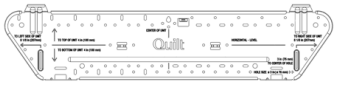

back plate

cable clamp

placeholder

condensate drain pipe

placeholder

system quick start guide

placeholder

service manual

Indoor Unit Front Panel

front panel

front panel guide

Quilt Outdoor Unit

Insert parts list here (see dial section for reference)

- Outdoor unit with cosmetic panel attached
- 3x drain plugs
- Drain fitting
- Conduit mount plugs
- ODU installer insert
-

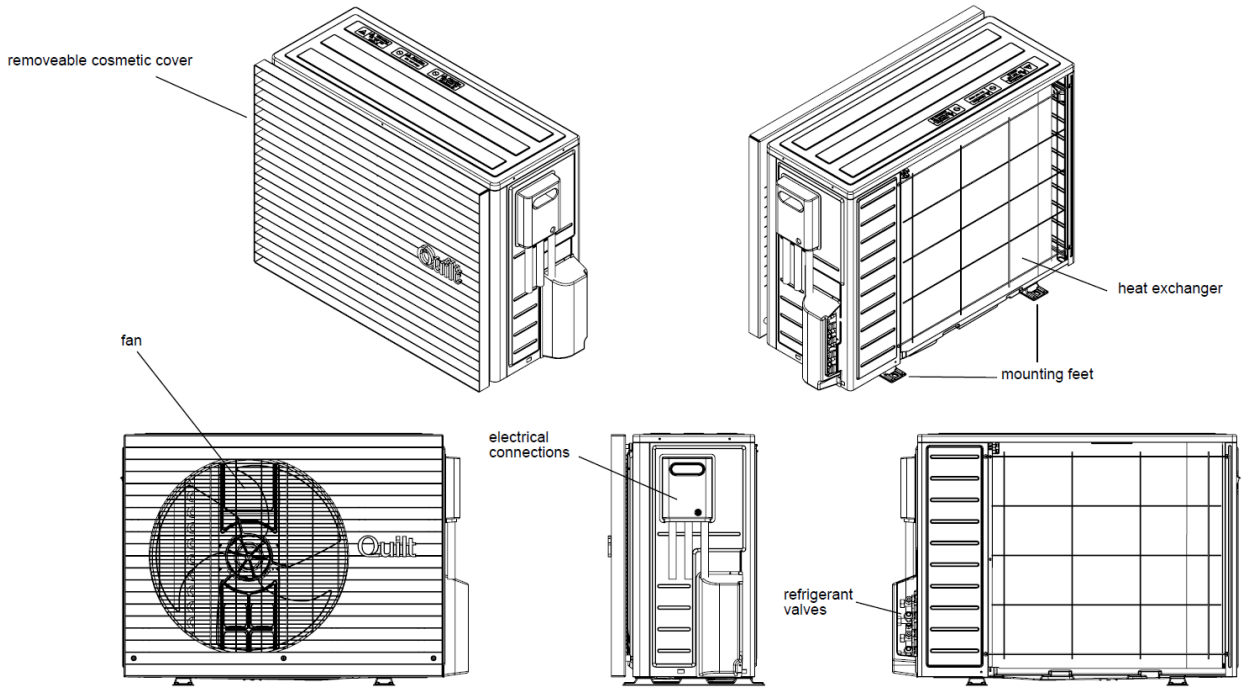

Quilt Sense

Quilt Sense

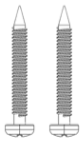

M3x25 screws (2x)

Quilt Sense guide

Quilt Dial

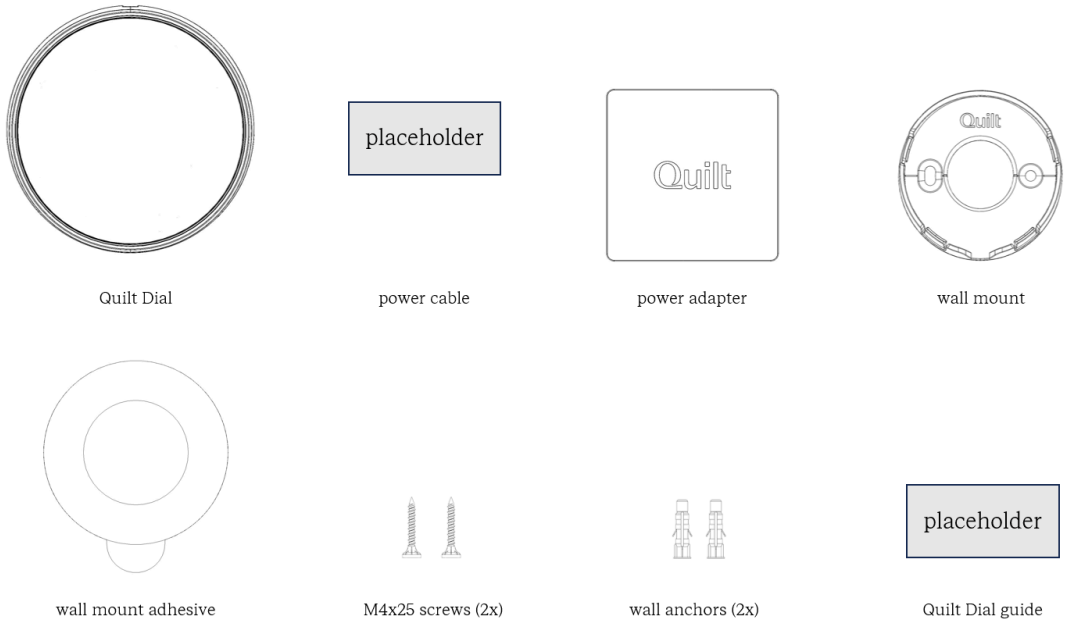

System Overview

How a heat pump works

<Placeholder for illustration on how a heat pump works.>

Indoor Unit

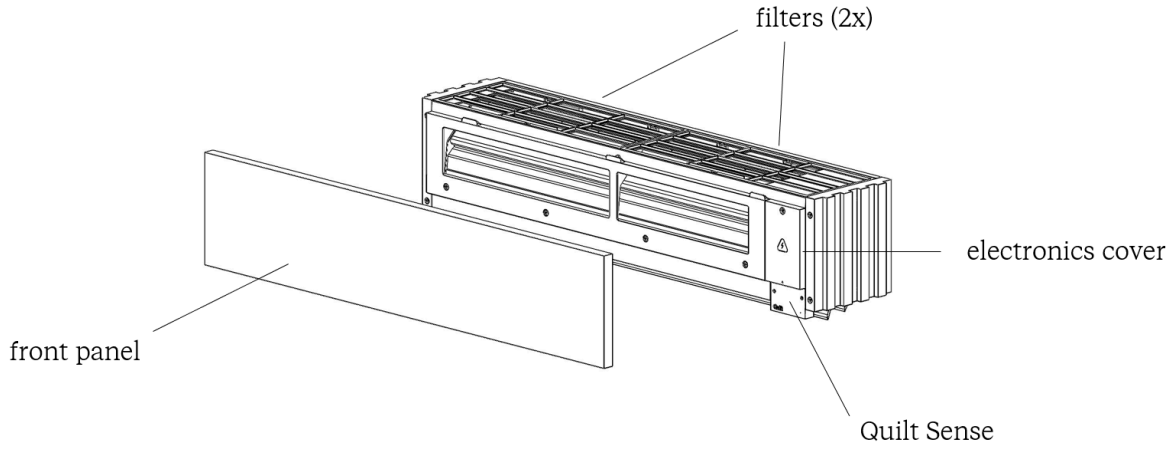

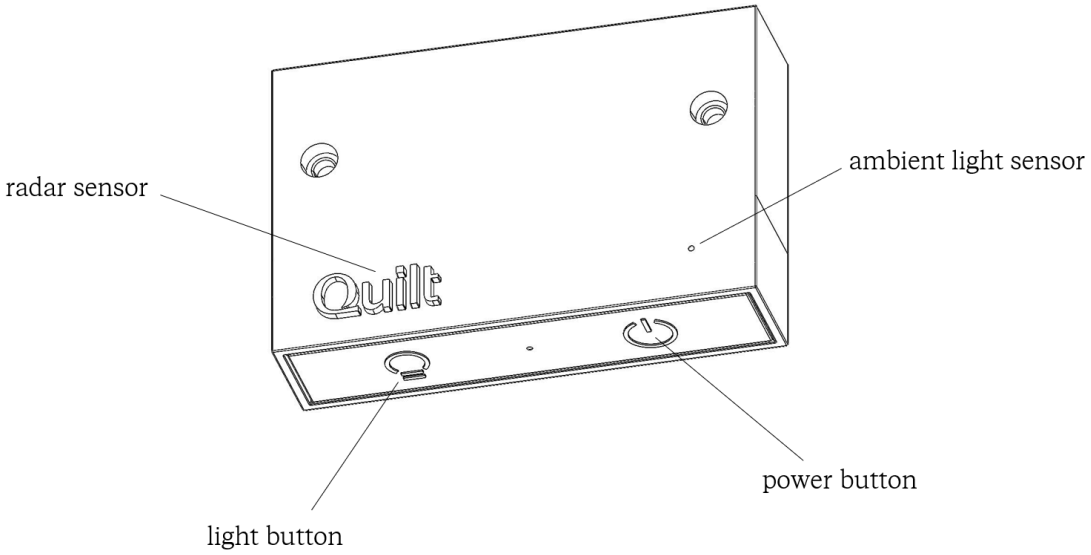

- The Indoor Unit delivers heating or cooling to each space in the home
- The front panel is removable, swappable, and paintable, and wallpaperable
- There are two air filters to prevent dust and debris from entering the Indoor Unit
- Electronics cover (turn off unit before removing cover. Please see Operations: How to power on your system)
- The Quilt Sense contains the control electronics and occupancy sensing

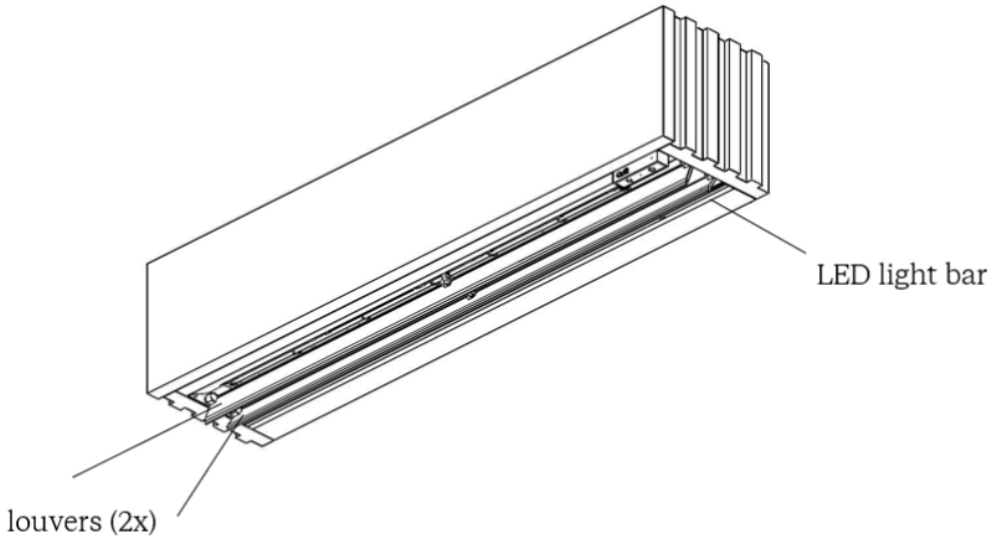

- The louvers direct the air coming out of the Indoor Unit
- The LED light bar provides a nice accent light and displays the system status.

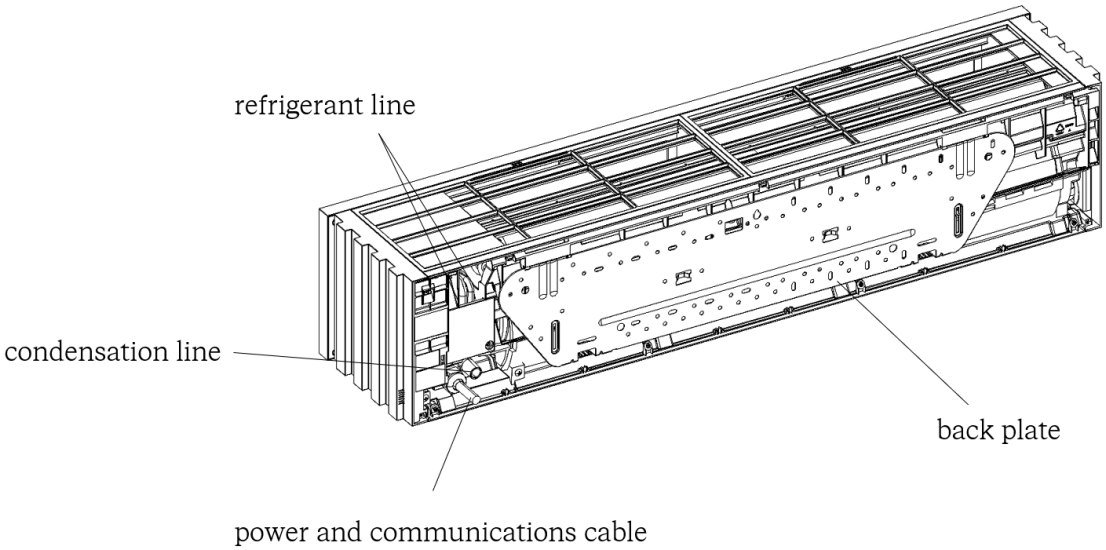

- The condensation line drains condensation and routes it outside
- Refrigerant lines deliver refrigerant to heat and cool the space
- The power and communications cable delivers power to the Indoor Unit and allows it to communicate with the Outdoor Unit.
- The back plate enables quick and easy wall mounting

Outdoor Unit

- The outdoor unit delivers heating and cooling to up to Indoor Units
    - Refrigerant valves
- AC disconnect switches to safely turn off the unit for servicing
- Connections
    - Electrical comes into the outdoor unit and is then distributed to the Indoor Units.
    - The refrigerant lines deliver heating and cooling to each Indoor Unit.
    - Front Panel

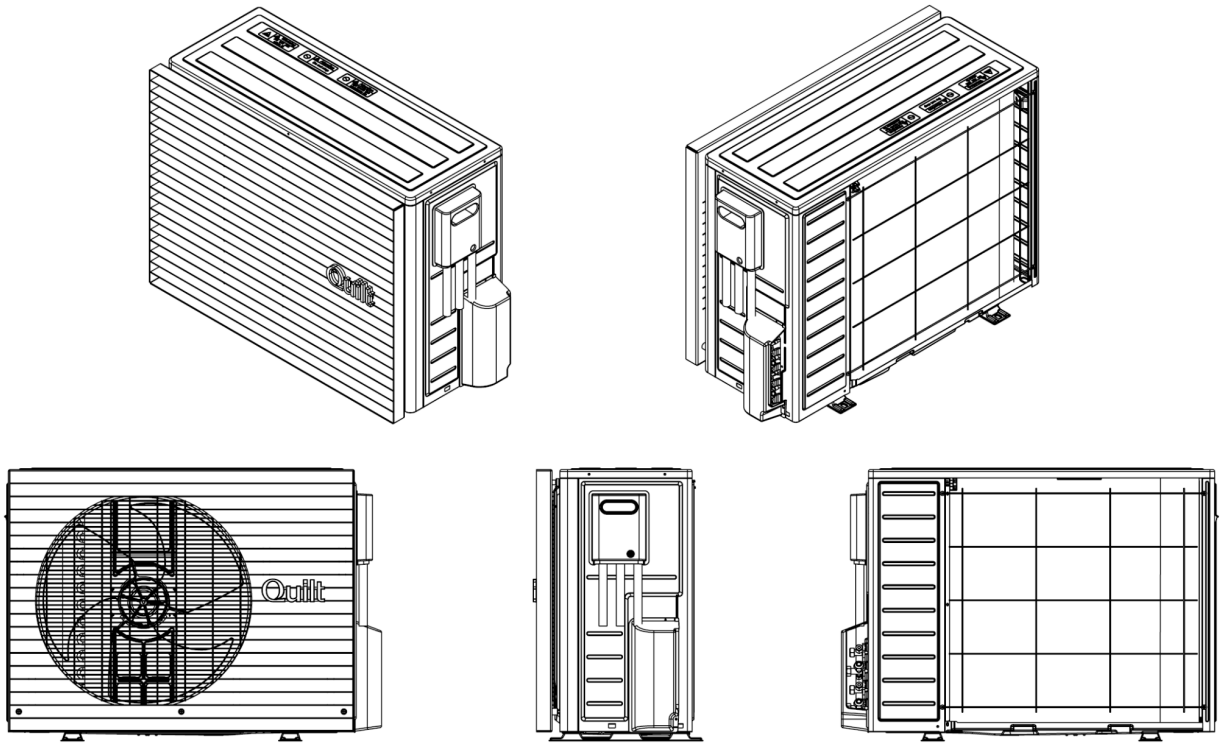

Dial

The Quilt Dial is a smart thermostat. It senses temperature, motion and proximity and sends that data to the Quilt heat pump system to give you the perfect conditions in the room. You can also use the Dial to control your Quilt heat pump via its touch panel display. The Dial communicates wirelessly with the Quilt heat pump, so it can be mounted anywhere in the room on a wall or set on a table or bedside.

- Wall mount
- Cable
- Adapter

Parts Installation

Installation of the overall Quilt system should be done by a qualified professional service technician. Users can remove and re-install the Indoor Unit filters, the Quilt front panel, the Quilt Sense, and the Dial for cleaning and customization

How to install and remove filters

There are two air filters on the top of the Indoor Unit. They must be removed and cleaned regularly to ensure optimum performance of the Quilt system. (See section on Maintenance and Cleaning)

To remove the filters::

- Position a step stool or ladder in front of the unit so that you can easily and safely reach the top of the Indoor Unit. Keep at least one hand on the stool to steady yourself while removing the filters. Do not allow children to perform this.
- There is a lip on each filter that you can grasp with your fingers and pull.

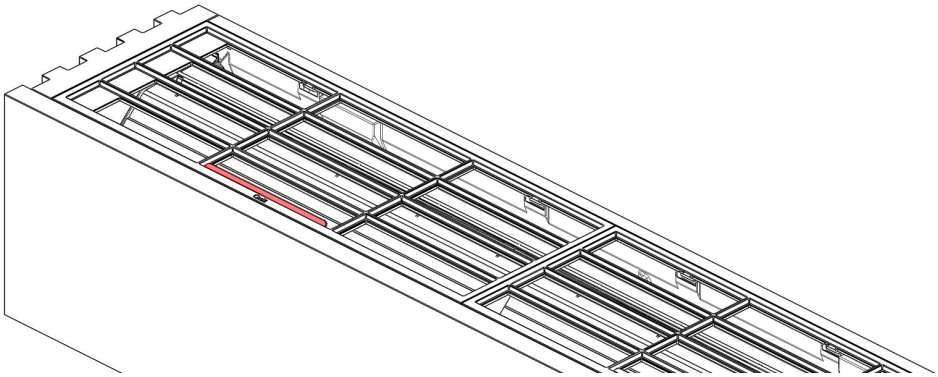

  - The filters are held in magnetically and should easily come off.

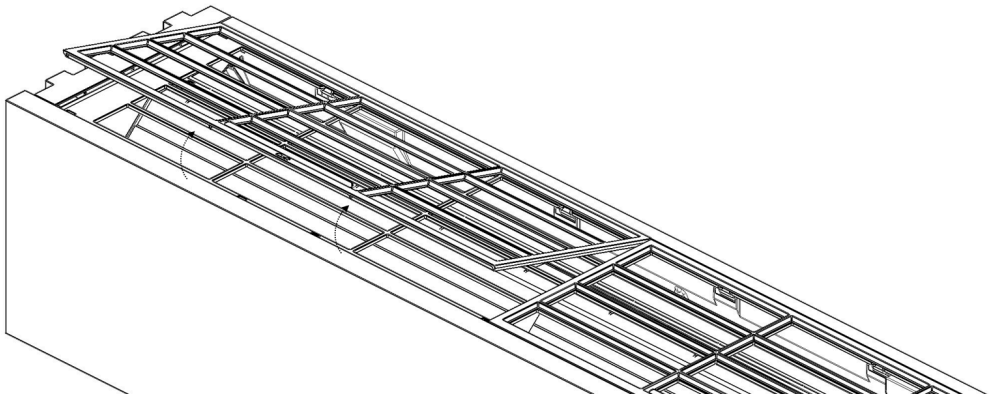

- Clean filters with a damp cloth to remove dust and debris.
- Please allow the filters to air dry before reinstalling.

To reinstall the filter:

- Position a step stool or ladder in front of the unit so that you can easily and safely reach the top of the Indoor Unit. Keep at least one hand on the stool to steady yourself while installing the filters. Do not allow children to perform this.
- Place each filter on the top of the unit. One on the left side and one on the right.

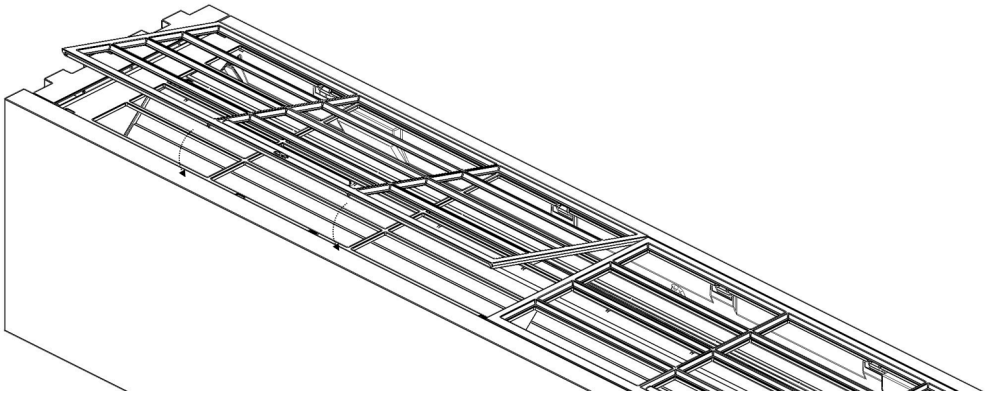

- Push the filters in until the magnets catch the filters and they sit flush to the unit.

How to install and remove the front panel

To remove:

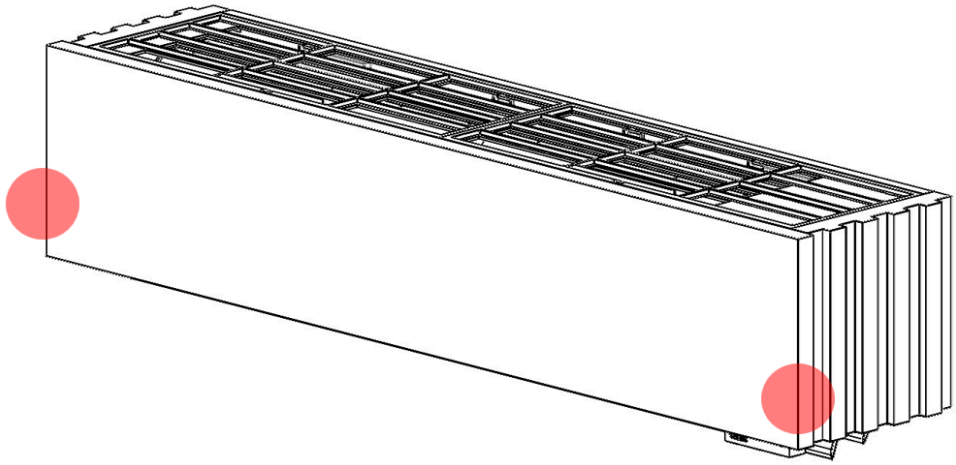

- Position a step stool or ladder in front of the unit so that you can easily and safely reach the top of the Indoor Unit. Keep at least one hand on the stool to steady yourself while removing the front panel. Do not allow children to perform this.
- Hold the bottom corners of the front panel and pull away from the wall. This will disengage the magnets

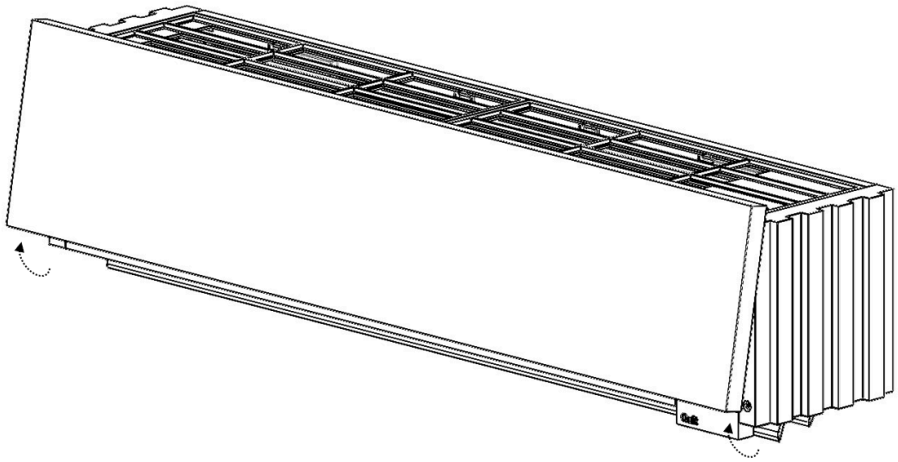

- Then lift up, and the front panel should come freely off the Indoor Unit.

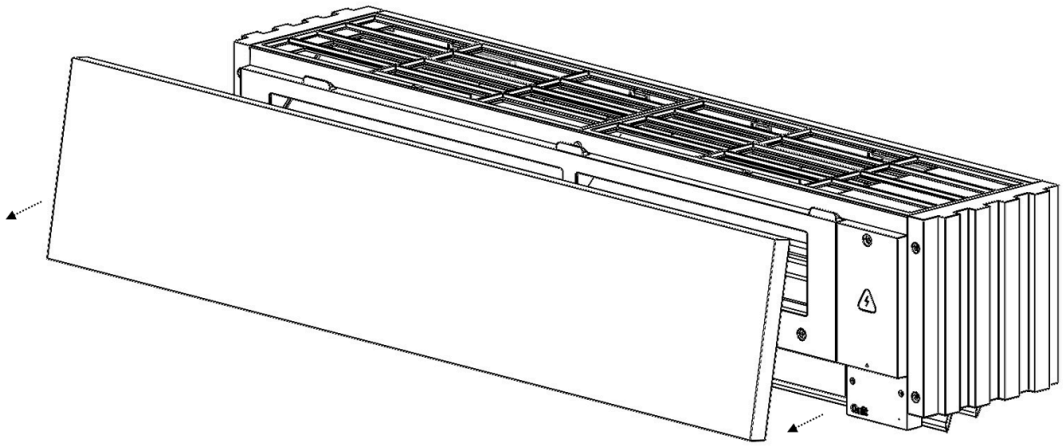

To install:

- Position a step stool or ladder in front of the unit so that you can easily and safely reach the top of the Indoor Unit. Keep at least one hand on the stool to steady yourself while installing the front panel. Do not allow children to perform this.
- Grab the front panel and line up the cleats on the Indoor Unit with the receiving pockets on the front panel.

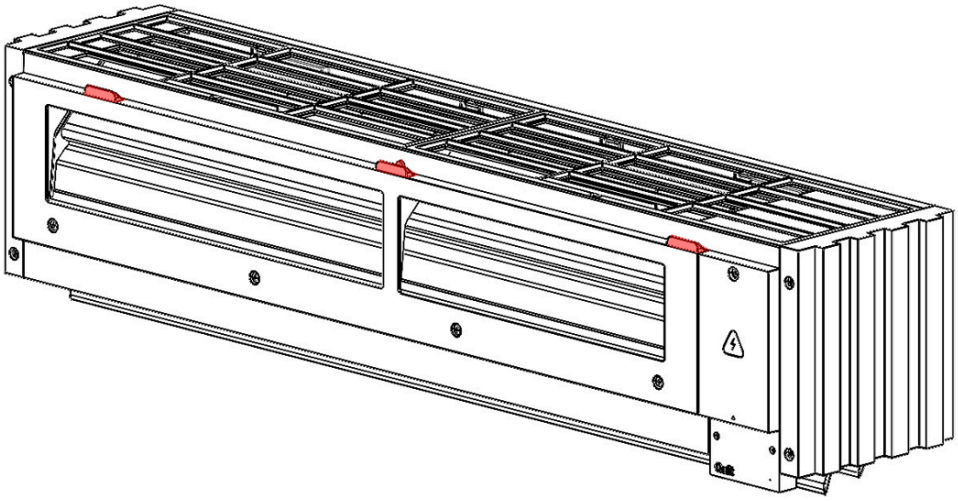

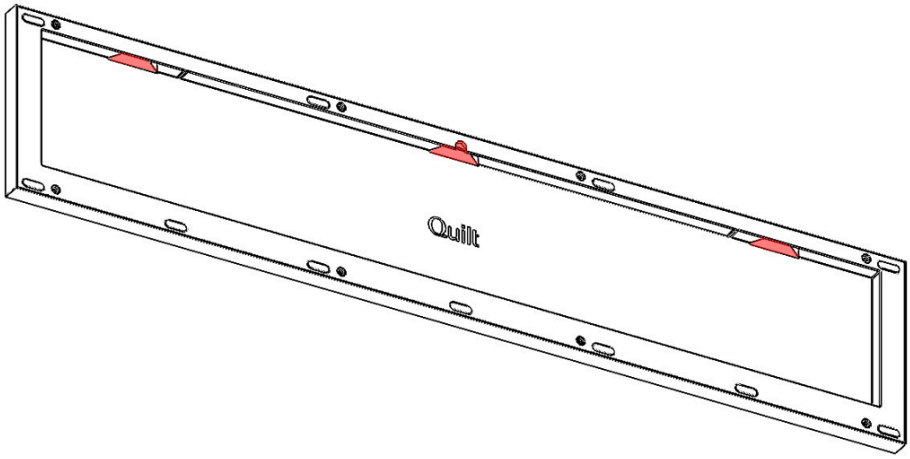

- Once those are lined up, engage those cleats and then let the front panel pivot down until it gets locked into the Indoor Unit with magnets.

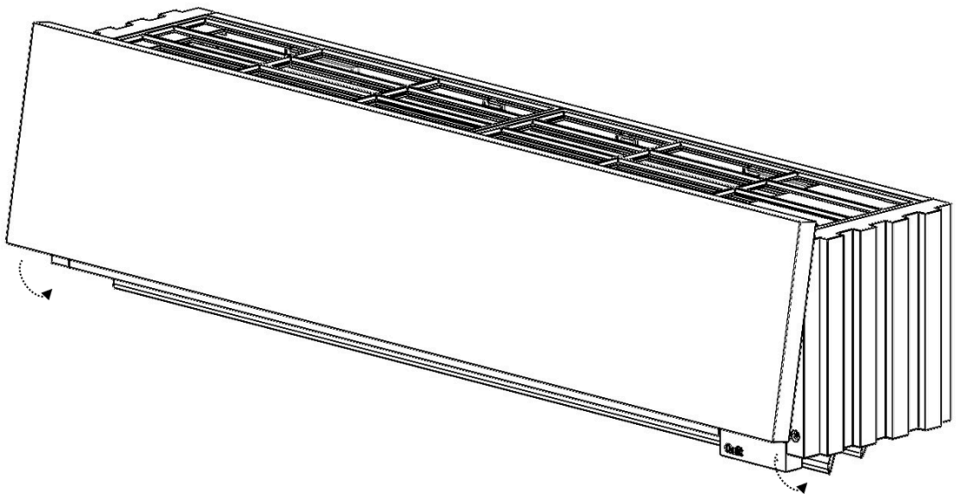

How to paint the front panel

- Remove the front panel following the instructions on the previous section.
- Follow instructions on painting found here:
    - www.quilt.com/support/painting
        - QR code

How to install and remove the Quilt Sense module

The Quilt Sense Module is user removable for upgrade and service.

To remove:

- Position a step stool or ladder in front of the unit so that you can easily and safely reach the top of the Indoor Unit. Keep at least one hand on the stool to steady yourself while removing the Quilt Sense. Do not allow children to perform this.

- Remove the front panel of the Indoor Unit. (See instruction on installation/removal of front panel)

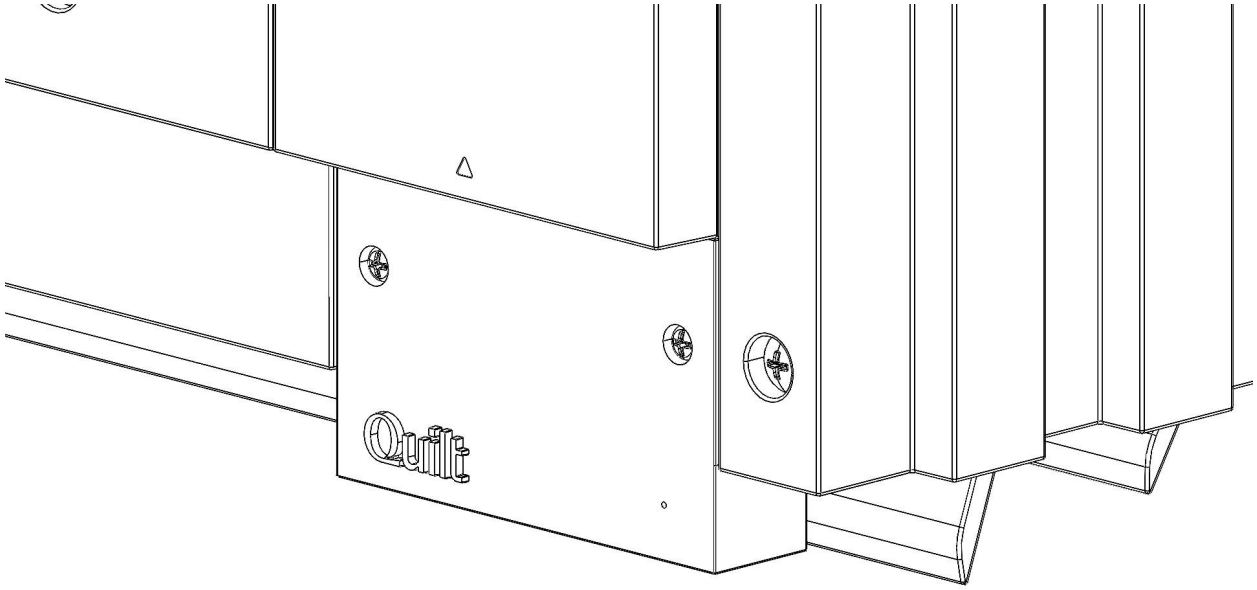

- Use a Phillips head screwdriver to remove both screws holding the module in.
- Pull out the Quilt Sense from the Indoor Unit. There is a light magnet holding in the module.

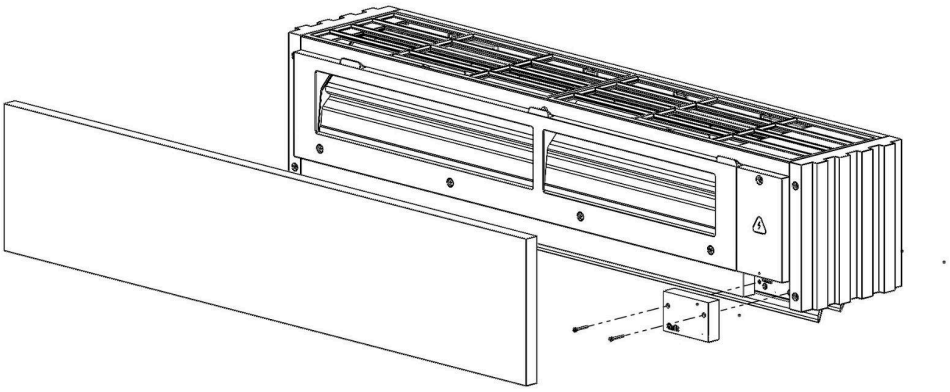

To install:

- Position a step stool or ladder in front of the unit so that you can easily and safely reach the top of the Indoor Unit. Keep at least one hand on the stool to steady yourself while installing the Quilt Sense. Do not allow children to perform this.
- Insert the Quilt Sense into the Indoor Unit as shown, carefully aligning the connector. The module will sit flush once the magnets are aligned.

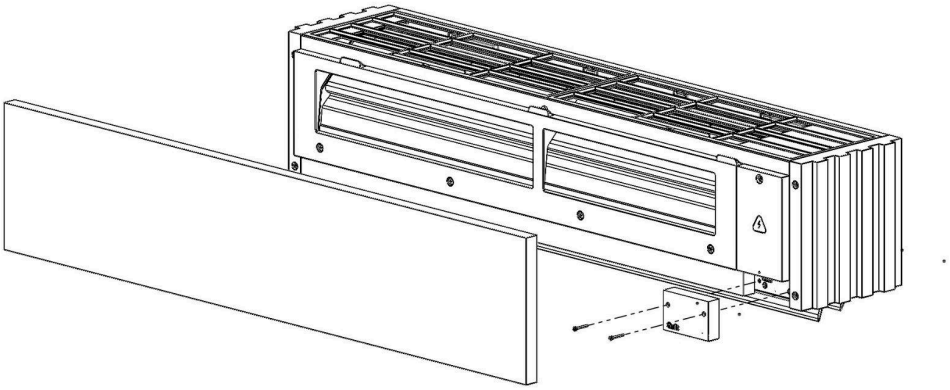

- Use a Phillips head screwdriver to tighten the two M3 screws.
- Replace the front panel of the Indoor Unit. (See instruction on installation/removal of front panel)

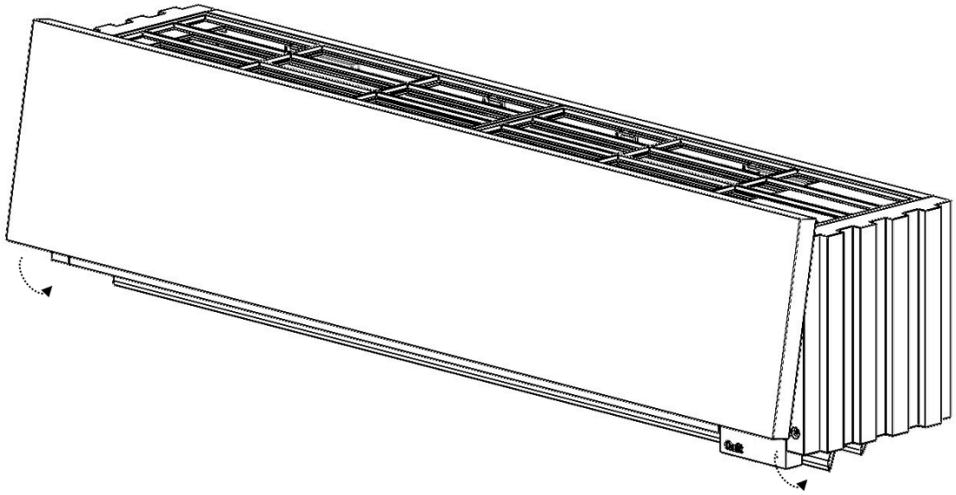

How to install the Quilt Dial

Note: The Quilt Dial should be installed after the Indoor Unit(s), Outdoor Unit(s) and Quilt Sense modules have been installed and tested for heating and cooling operation.

Refer to the Installation and Service Manual for all detailed installation and ownership information including the installation procedure for in-wall wiring. Quilt recommends that in-wall wiring be done by a licensed technician.

Parts you will need

- For Wall Mounting, you will need:
    - Screw Driver
    - Drill & Drill Bit
    - Level
    - Pencil

Placing the Dial

The Quilt Dial can be installed with two options for mounting:

Table-Top

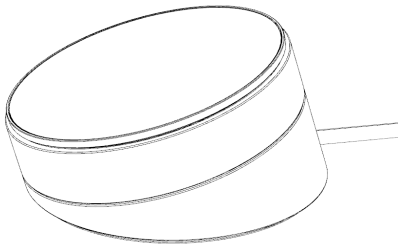

Wall Mounted

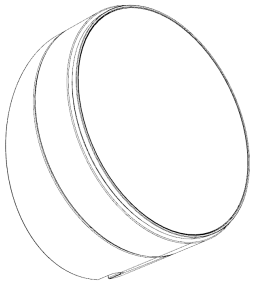

The Dial works out-of-the-box as a tabletop device with the included adapter and cable, but can be converted for wall-mounting.

The Dial is a temperature sensor for the Quilt system, in addition to being a control. It should be placed in the room with the Indoor Unit it is intended to control, nearest to an area of the room where the temperature is representative of the ambient temperature of the room.

Important: Avoid placing the Dial in a location that could cause inaccurate temperature readings:

Avoid Placing the Dial:

- In closets and cabinets
- Behind furniture

- Near heat sources such as fire places, space heaters, appliances and other electronics, or where there is direct sunlight
- On exterior-facing walls of the home
- Next to interior doors or windows
- In the airflow path of Indoor Units or other fans
- In the corners of the room

Powering the Dial

The Dial can be powered using the in-box power cable and provided power adapter.
To use the provided power cable and power adapter, plug the USB-C connector into the port on the power adapter and plug into the wall.

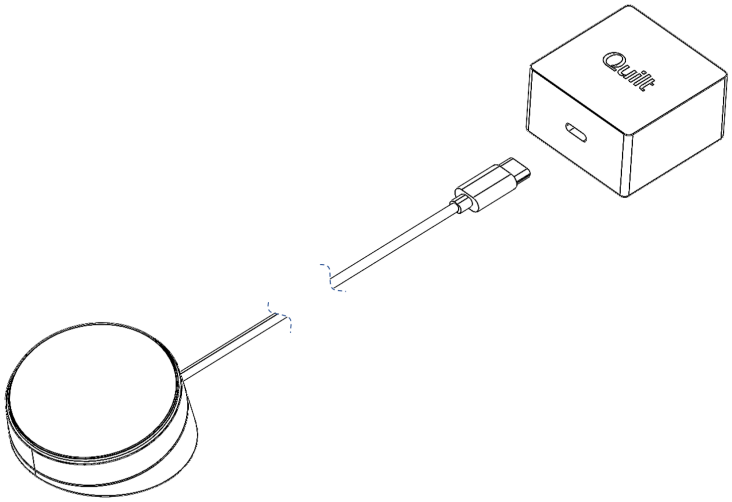
Qunit

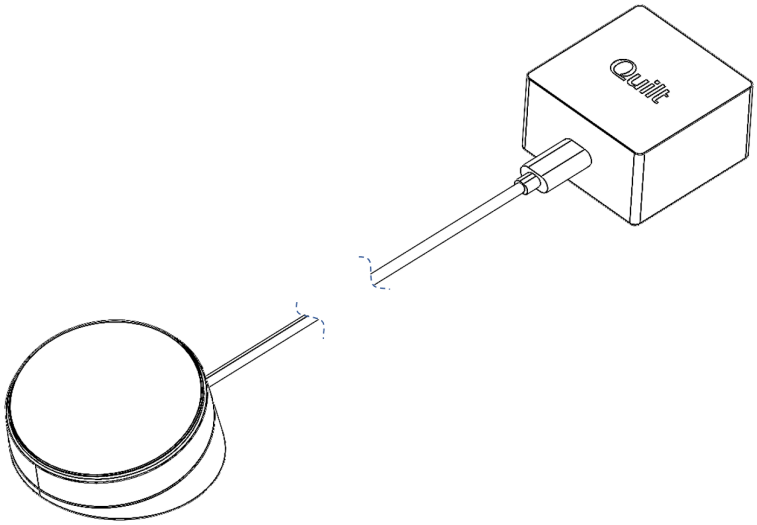
Qunit

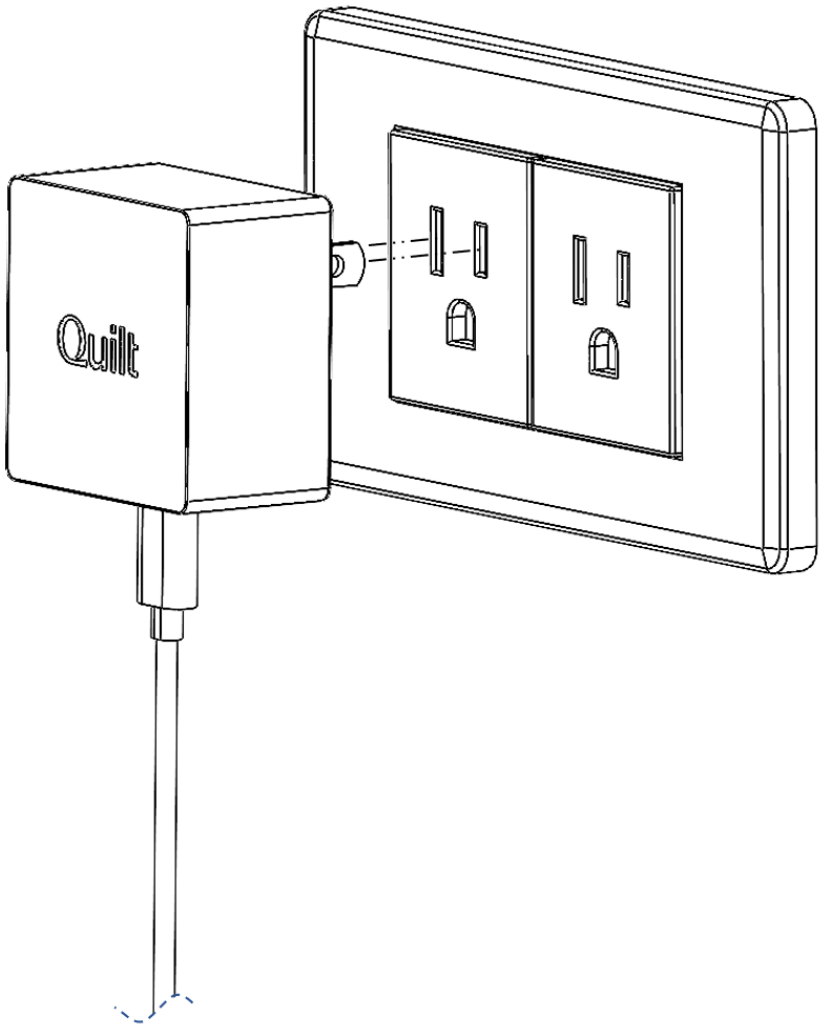

Alternatively, the Dial can be configured for professional wall mount installation using a suitable 5-15V DC power adapter and in-wall rated wiring of 18-22 AWG (not provided), in which case the original power cord must be detached. Please see the Installation and Service Manual for the full procedure.

Wall Mounting the Dial

The Dial comes with a wall mounting bracket that can be mounted to the wall using the provided screws or adhesive.

Prepare the Wall Mounting Location:

1) Before mounting the wall mount bracket, find a suitable location on the wall for the Dial. **TIP:** Look for a location where the temperature is most representative of the ambient room temperature and has no hazards within the wall
2) Decide how you will fasten the wall mount bracket to the wall
    a) Screws with wall anchors
    b) Adhesive on the Dial
3) Select the location on the wall and using a level, pencil a small horizontal line. The recommended mounting height is 3-5 feet from the floor

Based on your chosen wall mounting, follow the instructions below:

Install A: Screw-mount to wall with pre-installed in-wall wiring

Install B: Adhesive-mount to wall with inbox power cable

Install A: Screw-mount to wall with pre-installed in-wall wiring:

4) At the center of your horizontal pencil line, using a ½**"**size drill bit, drill a hole into the hollow of the wall for which to pull wires through
5) Using suitable in-wall wiring, fish the power wire from your intended power source location and through the hole you drilled. Fasten the wires with tape so that they do not fall back into the wall
6) Pull the wires through the large center hole in the Dial wall mount, so that the flat side of the wall mount is against the wall
7) Use the horizontal line indicators on the wall mount to align the wall mount to your horizontal pencil line and mark the locations of the screw holes on your wall. Ensure that the Quilt logo is up-side-right.
8) If using the anchors, remove the wall mount from the wall, use a ⅛**"** drill bit to drill pilot holes at the marked locations and horizontal line, push the drywall anchors into the holes, then replace the wall mount back into place

9) Using the provided screws, fasten the wall mount bracket to the wall, careful to not over torque

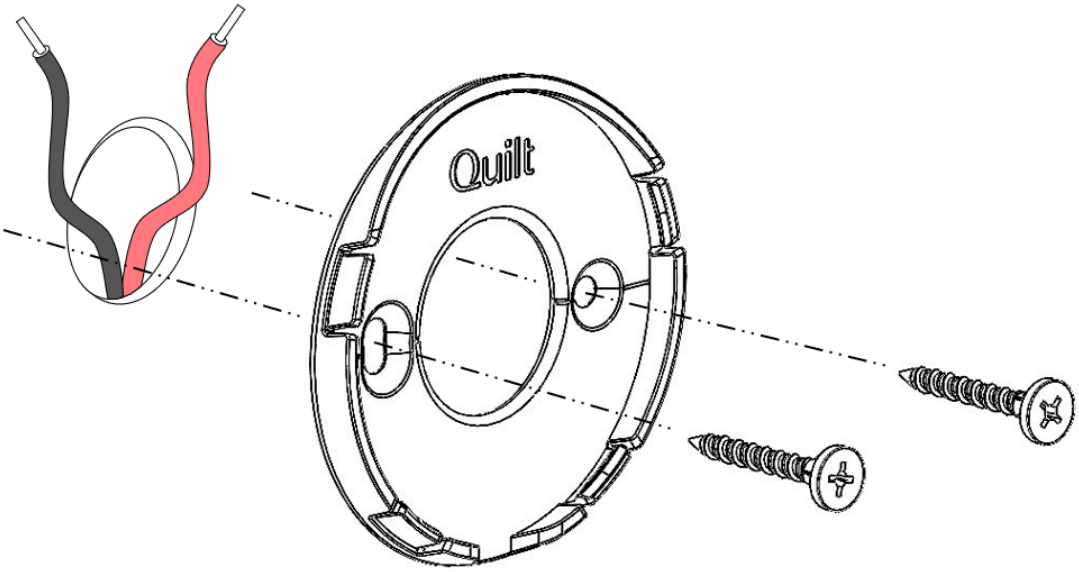

10) Ensure you note which wire is (+) positive and which is (-) negative, then fasten the wires to the screw terminals on the bottom side of the Dial, ensuring that + positive (red) and - negative (black) are aligned. Tighten the screws to hold the wires. Ensure

that the wires are not touching each other

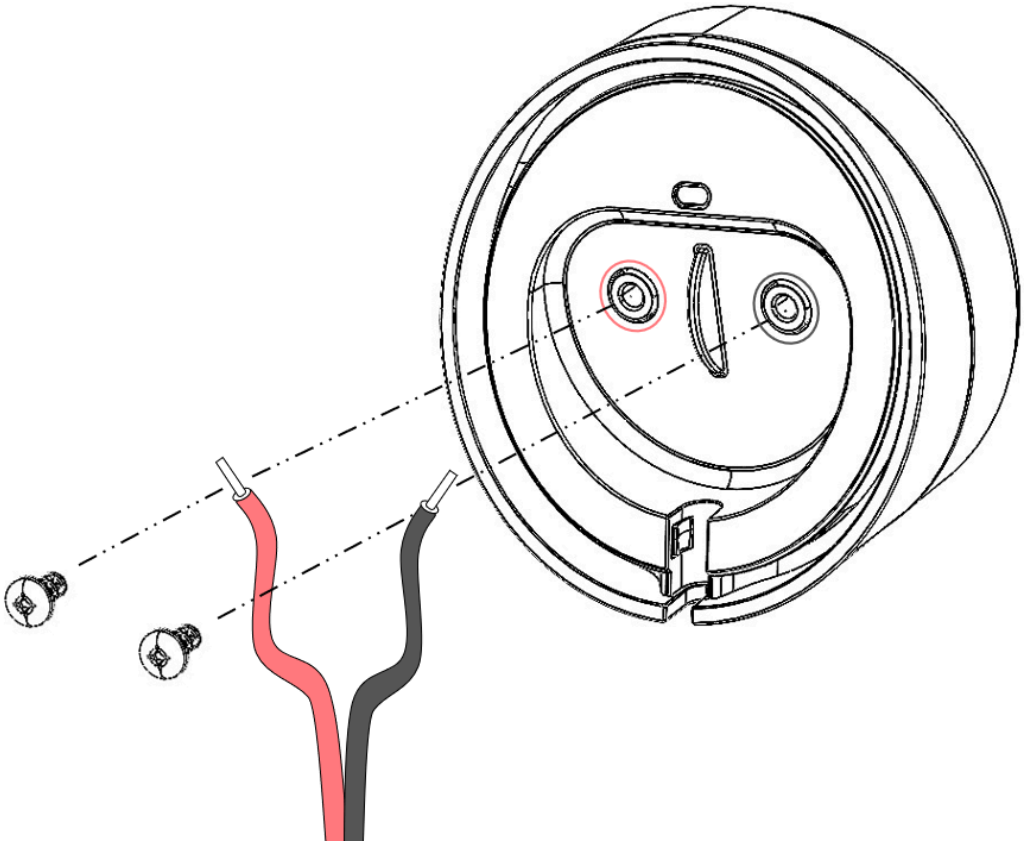

11) To mount the dial to the mount, align the cord cut down, so that the Dial is angled up to you. Align the bottom of the Dial parallel to the wall, and push the Dial into the mount with a motion that is 15 degrees from perpendicular to the wall (mostly perpendicular

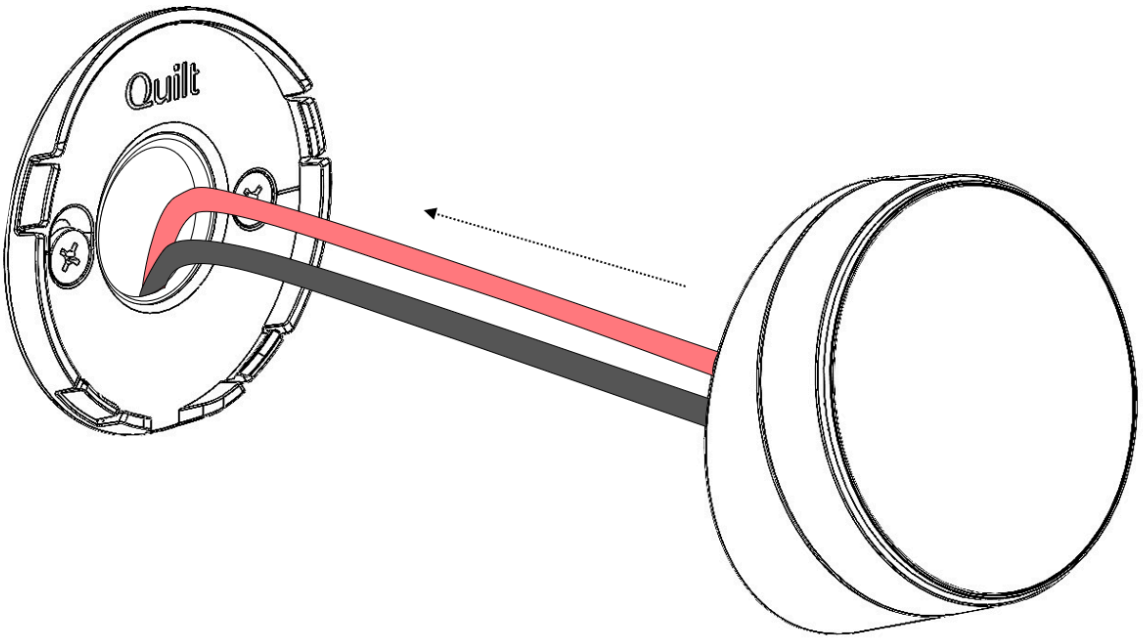

to the wall but slightly down). Push until the Dial is fully seated with a click

12) Once the Dial is fully mounted, connect the other ends of your in-wall wiring to the power adapter, being careful to ensure that the power adapter is suitable (5-15VDC 15W max) or using the Quilt recommended adapter. Be sure to align the + positive red and - negative black wires.
13) Power on the Dial

Install B: Adhesive Mount with inbox power cable (**Note**: Adhesive is rated for painted dry wall, glass, and metal, but screw-mount option is recommended for long-lasting use)

4) Ensure that the inbox power cable is attached and snapped into the cord retainer.

5) Remove the backer film from the adhesive and place onto the wall mount bracket, ensuring that the center hole is clear of adhesive. Press firmly to set

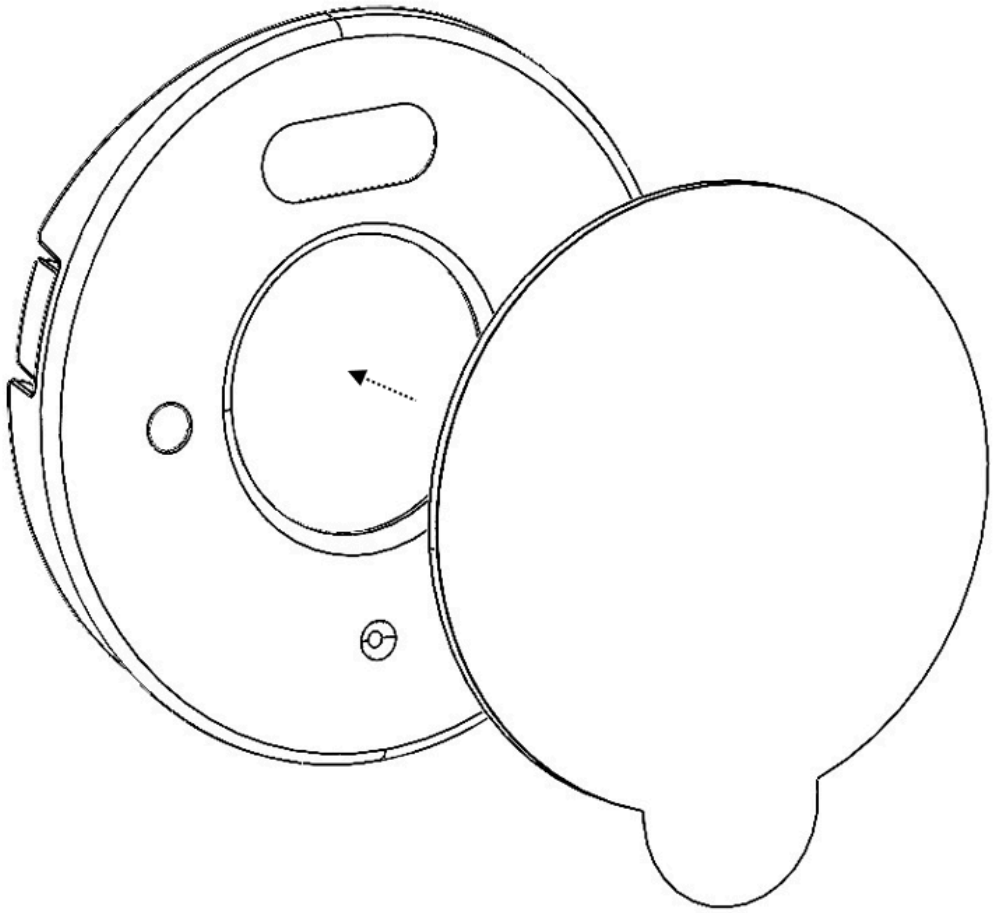

6) Remove the backer film on the wall side of the adhesive
7) Align the wall mount to the wall using the horizontal line indicators on the wall mount bracket against the pencil mark on the wall. When aligned, press the mount firmly against the wall to set.
8) To attach the dial to the mount, align the power cord hanging down, so that the Dial is angled up to you. Align the bottom of the dial parallel to the wall, and push the Dial into the mount with a motion that is 15 degrees from perpendicular to the wall (mostly perpendicular to the wall but slightly down). Push until the Dial is fully seated

with a click

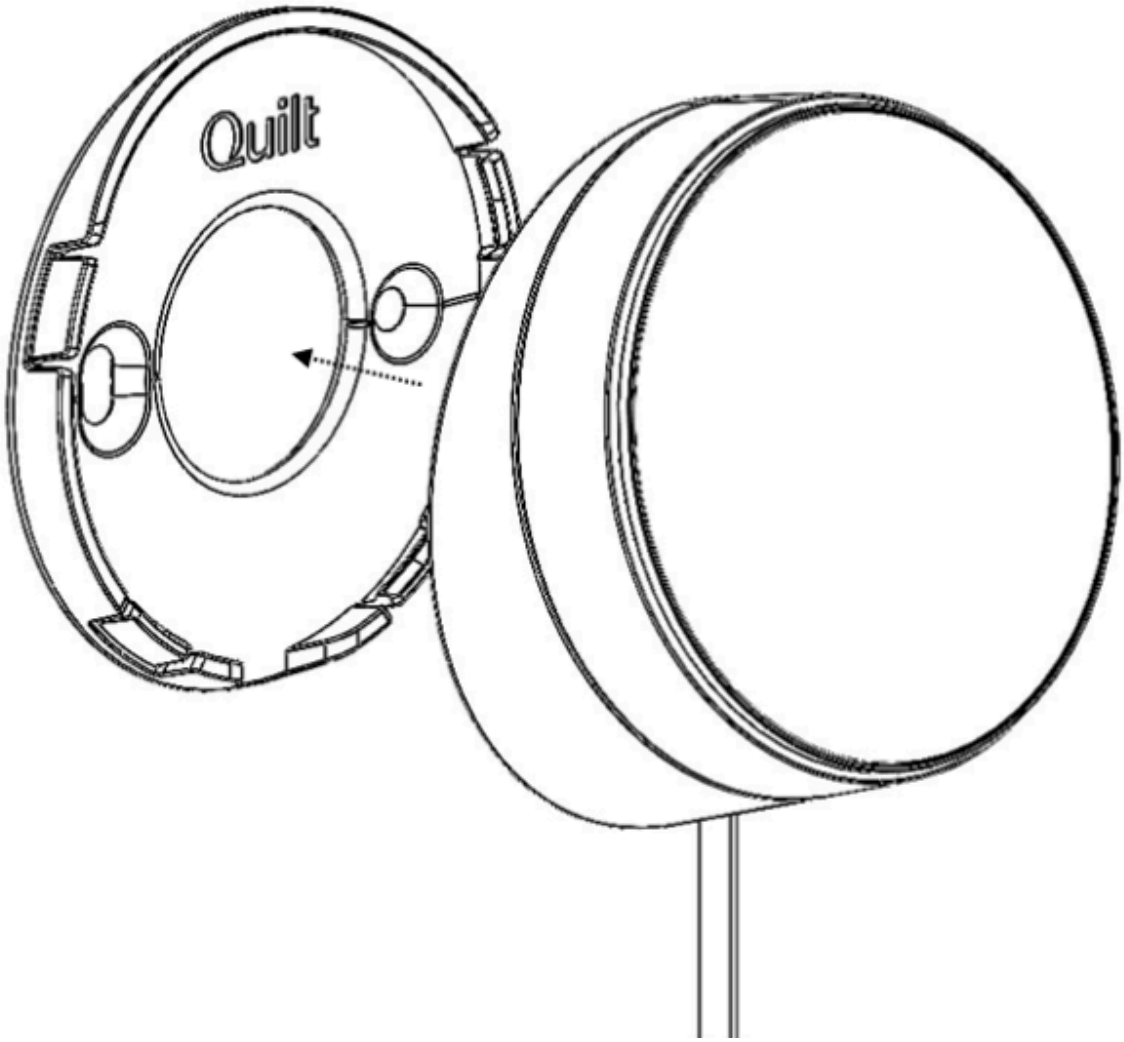

9) Plug the Dial power cord into the power wall power adapter

Setup and pairing

Downloading the mobile apps:

The app is available for Android and iOS.

[Android QR Code]
[iOS QR Code]

Pairing the indoor unit:

1. Once downloaded start by creating your home and creating the space you want to place the indoor unit.
2. Make sure the Heat pump system is turned on. (See section on turning on the heat pump)
3. From within the chosen space, click “add a device”
4. The app will direct you to scan the QR code on the Indoor Unit.
5. To find the QR code, remove the front panel of the indoor unit (See removal instructions) then scan the QR code on the Quilt Sense Module installed.
6. From there the app will guide you through adding it to your space.

Follow additional instructions and for the latest pairing instructions go to quilt.com/support/pairing

Pairing the Dial:

1. Before pairing the Dial, ensure your home and the space you want to place the Dial are set up in the app.
2. Now make sure the Dial is powered on. (See section on turning on the Dial)
3. If the Dial is ready to pair the display will show a QR code to scan.
4. If it is not showing a QR code and it’s not already paired with the app then you will need to factory reset to begin the pairing process again.
5. Factory reset the Dial. (See section of factory resetting the Dial)
6. With QR code showing on the Dial, navigate to the space you want to add the Dial in the app.
7. From within the chosen space, click “add a device”
8. The app will direct you to scan the QR code on the Dial.
9. From there the app will guide you through adding it to your space.

Follow additional instructions and for the latest pairing instructions go to quilt.com/support/pairing

Setting up occupancy detection:

The Quilt Sense detects room occupancy so that your system can control your room smartly and efficiently. The occupancy system has a maximum field-of-view of 180 degrees with a range of up to 15ft, which means the system can detect human presence within a semi-circular space having a radius of 15ft. You can configure this feature by tuning the detection area (range and angle) based on the dimensions of your room and your preference in the app.